Lucent Technologies
Bell Labs Innovations

MERLIN LEGEND® Communications System Release 6.1

System Programming

555-661-111
Comcode 108289471
Issue 1
August 1998

Document 555-661-110

Comcode 108289000
Printed in USA
August 1998

Notice

Every effort was made to ensure that the information in this book was complete and accurate at the time of printing. However, information is subject to change. See Appendix A, “Customer Support Information,” for important information.

Your Responsibility for Your System’s Security

Toll fraud is the unauthorized use of your telecommunications system by an unauthorized party, for example, persons other than your company’s employees, agents, subcontractors, or persons working on your company’s behalf. Note that there may be a risk of toll fraud associated with your telecommunications system, and if toll fraud occurs, it can result in substantial additional charges for your telecommunications services.

You and your System Manager are responsible for the security of your system, such as programming and configuring your equipment to prevent unauthorized use. The System Manager is also responsible for reading all installation, instruction, and system programming documents provided with this product in order to fully understand the features that can introduce risk of toll fraud and the steps that can be taken to reduce that risk. Lucent Technologies does not warrant that this product is immune from or will prevent unauthorized use of common-carrier telecommunication services or facilities accessed through or connected to it. Lucent Technologies will not be responsible for any charges that result from such unauthorized use. For important information regarding your system and toll fraud, see Appendix A, “Customer Support Information.”

Federal Communications Commission Statement

This equipment has been tested and found to comply with the limits for a Class A digital device, pursuant to Part 15 of the FCC Rules. These limits are designed to provide reasonable protection against harmful interference when the equipment is operated in a commercial environment. This equipment generates, uses, and can radiate radio frequency energy and, if not installed and used in accordance with the instruction manual, may cause harmful interference to radio communications. Operation of this equipment in a residential area is likely to cause harmful interference, in which case the user will be required to correct the interference at his own expense. For further FCC information, see Appendix A, “Customer Support Information.”

Canadian Department of Communications (DOC) Interference Information

This digital apparatus does not exceed the Class A limits for radio noise emissions set out in the radio interference regulations of the Canadian Department of Communications.

Le Présent Appareil Numérique n’émet pas de bruits radioélectriques dépassant les limites applicables aux appareils numériques de la classe A préscrites dans le règlement sur le brouillage radioélectrique édicté par le ministère des Communications du Canada.

Trademarks

5ESS, AUDIX, DEFINITY, HackerTracker, CONVERSANT, Lucent Technologies Attendant, Fax Attendant System, MERLIN, MERLIN LEGEND, MERLIN MAIL, MERLIN PFC, MLX-10, MLX-10D, MLX-10DP, MLX-16DP, MLX-20L, MLX-28D, PassageWay, PARTNER, and Voice Power are registered trademarks and 4ESS, Intuity, Lucent Technologies, MLX-5, MLX-5D, and ExpressRoute 1000 are trademarks of Lucent Technologies in the US and other countries. NetPROTECT is a service mark of Lucent Technologies in the US and other countries.

Supra, StarSet, and Mirage are registered trademarks of Plantronics, Inc.

MEGACOM, ACCUNET, AT&T, Magic on Hold, and MultiQuest are registered trademarks of AT&T.

Pipeline is a trademark of Ascend Communications, Inc.

Intel and Pentium are registered trademarks of Intel Corporation.

PagePac is a registered trademark and PagePal a trademark of DRACON, a division of Harris Corporation.

UNIX is a registered trademark of UNIX System Laboratories, Inc

NORTEL is a registered trademark and DMS a trademark of Northern Telecom.

MCI, Prism, and Vnet are registered trademarks of MCI Communications Corp.

Apple and Macintosh are registered trademarks of Apple Computer, Inc.

Microsoft and Windows are registered trademarks of Microsoft Corporation.

Ordering Information

Call:	BCS Publications Center
	Voice 1 800 457-1235 International Voice 317-322-6791
	Fax 1 800 457-1764 International Fax 317-322-6699
Write:	BCS Publications Center
	2855 North Franklin Road
	Indianapolis, IN 46219-1385
Order:	Document No. 555-661-110
	Comcode: 108289000
	Issue 1, August 1998

For more information about Lucent Technologies documents, refer to the section entitled ‘‘Related Documents’’ on page xlix.

Support Telephone Number

In the continental US, Lucent Technologies provides a toll-free customer helpline 24 hours a day. Call the Lucent Technologies Helpline at **1 800 628-2888** or your Lucent Technologies authorized dealer if you need assistance when installing, programming, or using your system. Consultation charges may apply. Outside the continental US, contact your local Lucent Technologies authorized representative.

Lucent Technologies Fraud Intervention

If you *suspect you are being victimized* by toll fraud and you need technical support or assistance, call BCS National Service Assistance Center at **1 800 628-2888**.

Year 2000 Compliance

The MERLIN LEGEND Communications System is certified to be Year 2000 compliant. Additional information on this certification, and other issues regarding Year 2000 compliance, is available online at http://www.lucent.com/enterprise/sig/yr2000.

Warranty

Lucent Technologies provides a limited warranty on this product. Refer to “Limited Warranty and Limitation of Liability” in Appendix A, “Customer Support Information.”

Contents

Figures

1 Programming Basics

2 Programming with SPM

3 Programming Procedures

E Button Diagrams

Tables

1 Programming Basics

2 Programming with SPM

3 Programming Procedures

IMPORTANT SAFETY INSTRUCTIONS

The exclamation point in an equilateral triangle is intended to alert the user to the presence of important operating and maintenance (servicing) instructions in the literature accompanying the product.

When installing telephone equipment, always follow basic safety precautions to reduce the risk of fire, electrical shock, and injury to persons, including:

- Read and understand all instructions.
- Follow all warnings and instructions marked on or packed with the product.
- Never install telephone wiring during a lightning storm.
- Never install a telephone jack in a wet location unless the jack is specifically designed for wet locations.
- Never touch uninsulated telephone wires or terminals unless the telephone wiring has been disconnected at the network interface.
- Use caution when installing or modifying telephone lines.
- Use only Lucent Technologies-manufactured MERLIN LEGEND Communications System circuit modules, carrier assemblies, and power units in the MERLIN LEGEND Communications System control unit.
- Use only Lucent Technologies-recommended/approved MERLIN LEGEND Communications System accessories.
- If equipment connected to the analog extension modules (008, 408, 408 GS/LS) or to the MLX telephone modules (008 MLX, 408 GS/LS-MLX) is to be used for in-range out-of-building (IROB) applications, IROB protectors are required.
- Do not install this product near water, for example, in a wet basement location.
- Do not overload wall outlets, as this can result in the risk of fire or electrical shock.
- The MERLIN LEGEND Communications System is equipped with a 3-wire grounding-type plug with a third (grounding) pin. This plug will fit only into a grounding-type power outlet. This is a safety feature. If you are unable to insert the plug into the outlet, contact an electrician to replace the obsolete outlet. Do not defeat the safety purpose of the grounding plug.

- The MERLIN LEGEND Communications System requires a supplementary ground.
- Do not attach the power supply cord to building surfaces. Do not allow anything to rest on the power cord. Do not locate this product where the cord will be abused by persons walking on it.
- Slots and openings in the module housings are provided for ventilation. To protect this equipment from overheating, do not block these openings.
- Never push objects of any kind into this product through module openings or expansion slots, as they may touch dangerous voltage points or short out parts, which could result in a risk of fire or electrical shock. Never spill liquid of any kind on this product.
- Unplug the product from the wall outlet before cleaning. Use a damp cloth for cleaning. Do not use cleaners or aerosol cleaners.
- Auxiliary equipment includes answering machines, alerts, modems, and fax machines. To connect one of these devices, you must first have a Multi-Function Module (MFM).
- Do not operate telephones if chemical gas leakage is suspected in the area. Use telephones located in some other safe area to report the trouble.

WARNING:

- *For your personal safety, DO NOT install an MFM yourself.*
- *ONLY an authorized technician or dealer representative shall install, set options, or repair an MFM.*
- *To eliminate the risk of personal injury due to electrical shock, DO NOT attempt to install or remove an MFM from your MLX telephone. Opening or removing the module cover of your telephone may expose you to dangerous voltages.*

SAVE THESE INSTRUCTIONS

About This Book

The power and versatility of the MERLIN LEGEND® Communications System is due in part to its many options and features. These options and features have been recorded on system planning forms and initially programmed at the time of installation. Changes in use patterns, the addition of new equipment, or a change in operating mode may necessitate additional system programming.

Intended Audience

This book is intended for system managers — people who plan, program, maintain, and manage the system. It is also intended for qualified support personnel who are responsible for installation and initial system programming.

How to Use This Book

This book contains all the programming procedures you need to enable your system to function at peak efficiency. Refer to the following documents for additional information:

- *Feature Reference* describes features in detail and any feature interaction.
- *System Planning* describes the System Planning Forms and their use.

“Related Documents,” later in this section, provides a complete list of system documentation together with ordering information.

In the USA only, Lucent Technologies provides a toll-free customer Helpline 24 hours a day. Call the Helpline at 1 800 628-2888 (consultation charges may apply), or call your Lucent Technologies representative if you need assistance when installing, programming, or using your system.

Outside the USA, if you need assistance when installing, programming, or using your system, contact your Lucent Technologies authorized representative.

Terms and Conventions Used

The terms described here are used in preference to other, equally acceptable terms for describing communications systems.

Lines, Trunks, and Facilities

Facility is a general term that designates a communications path between a telephone system and the telephone company central office. Technically, a *trunk* connects a switch to a switch, for example, the MERLIN LEGEND Communications System to the central office. Technically, a *line* is a loop-start facility or a communications path that does not connect switches, for example, an intercom line or a Centrex line.

However, in actual usage, the terms *line* and *trunk* are often applied interchangeably. In this guide, we use *lines/trunks* and *line/trunk* to refer to facilities in general. Specifically, we refer to *digital facilities*. We also use specific terms such as *personal line*, *ground-start trunk*, *DID trunk*, and so on. When you talk to personnel at your local telephone company central office, ask about the terms they use for the specific facilities they connect to your system.

Some older terms have been replaced with newer terms. The following list shows the old term and the new term.

Old	New
trunk module	line/trunk module
trunk jack	line/trunk jack
station	extension
station jack	extension jack
analog data station	modem data workstation
7500B data station	ISDN terminal adapter data workstation
analog voice and analog data station	analog voice and modem data workstation
digital voice and analog data station	MLX voice and modem data workstation
analog data-only station	modem data-only workstation
7500B data-only station	ISDN terminal adapter data-only workstation
MLX voice and 7500B data station	MLX voice and ISDN terminal adapter data workstation

Typographical Conventions

Certain type fonts and styles act as visual cues to help you rapidly understand the information presented:

Example	Purpose
It is *very* important that you follow these steps. You *must* attach the wristband before touching the connection.	Italics indicate emphasis.
The part of the headset that fits over one or both ears is called a *headpiece.*	Italics also set off special terms.
If you press the **Feature** button on an MLX display telephone, the display lists telephone features you can select. A programmed Auto Dial button gives you instant access to an inside or outside number.	The names of fixed-feature, factory-imprinted buttons appear in bold. The names of programmed buttons are printed as regular text.
Choose `Ext Prog` from the display screen.	Plain constant-width type indicates text that appears on the telephone display or PC screen.
To activate Call Waiting, dial ***11.***	Constant-width type in italics indicates characters you dial at the telephone or type at the PC.

Product Safety Advisories

Throughout these documents, hazardous situations are indicated by an exclamation point inside a triangle and the word *CAUTION* or *WARNING*.

WARNING:
Warning indicates the presence of a hazard that could cause death or severe personal injury if the hazard is not avoided.

CAUTION:
Caution indicates the presence of a hazard that could cause minor personal injury or property damage if the hazard is not avoided.

Security

Certain features of the system can be protected by passwords to prevent unauthorized users from abusing the system. You should assign passwords wherever you can and limit knowledge of such passwords to three or fewer people.

Nondisplaying authorization codes and telephone numbers provide another layer of security. For more information, see Appendix A, “Customer Support Information”.

Throughout this document, toll fraud security hazards are indicated by an exclamation point inside a triangle and the words *SECURITY ALERT*.

SECURITY ALERT:
Security Alert indicates the presence of toll fraud security hazard. Toll fraud is the unauthorized use of your telecommunications system, or use by an unauthorized party (e.g., persons other than your company’s employees, agents, subcontractors, or persons working on your company’s behalf). Be sure to read “Your Responsibility for Your System’s Security” on the inside front cover of this book and “Security of Your System: Preventing Toll Fraud” in Appendix A, “Customer Support Information.”

Related Documents

The documents listed below are part of the MERLIN LEGEND documentation set. Within the continental United States, these can be ordered from the Lucent Technologies Customer Information Center by calling 1 800 457-1235.

Document No.	Title
	System Documents
555-661-100	*Customer Documentation Package**
555-661-110	*Feature Reference*
555-661-111	*System Programming*
555-661-112	*System Planning*
555-661-113	*System Planning Forms*
555-661-116	*Pocket Reference*
555-661-118	*System Manager's Guide*
555-661-150	*Network Reference*
555-661-800	*Customer Reference CD-ROM*†
	Telephone User Support
555-660-120	*Analog Multiline Telephones User's Guide*
555-660-122	*MLX Display Telephones User's Guide*
555-660-124	*MLX-5® and MLX-10® Nondisplay Telephones User's Guide*
555-660-126	*Single-Line Telephones User's Guide*
555-660-138	*MDC and MDW Telephones User's Guide*
555-630-150	*MLX-10D Display Telephone Tray Cards (5 cards)*
555-630-155	*MLX-16DP Display Telephone Tray Cards (5 cards)*
555-630-152	*MLX-28D and MLX-20L Telephone Tray Cards (5 cards)*
555-630-151	*MLX-10 and MLX-5 Nondisplay Telephone Tray Cards (6 cards)*
	System Operator Support
555-660-132	*Analog Direct-Line Consoles Operator's Guide*
555-660-134	*MLX Direct-Line Consoles Operator's Guide*
555-660-136	*MLX Queued Call Console Operator's Guide*
	Miscellaneous User Support
555-661-130	*Calling Group Supervisor and Service Observer User Guide*
555-640-105	*Data/Video Reference*
555-025-600	*BCS Products Security Handbook*
	Documentation for Qualified Technicians
555-661-140	*Installation, Programming, & Maintenance (IP&M) Binder* Includes: *Installation, System Programming & Maintenance (SPM), and Maintenance & Troubleshooting*

* The Customer Documentation Package consists of the paper versions of the *System Manager's Guide*, *Feature Reference*, and *System Programming*.

† The Customer Reference CD-ROM contains the *System Manager's Guide*, *Feature Reference*, *System Programming,* and *Network Reference.*

How to Comment on This Book

We welcome your comments, both positive and negative. Please use the feedback form on the next page to let us know how we can continue to serve you. If the feedback form is missing, write directly to:

Documentation Manager
Lucent Technologies
211 Mount Airy Road, Room 2W226
Basking Ridge, NJ 07920

Programming Basics

1

This chapter presents the information you need to master before you begin the programming procedures covered in Chapter 3, “Programming Procedures.” It covers the following subjects:

- An introduction to system programming basics
- How to use the system programming console
- How the programming screens and keys work
- How to interpret and use the programming procedures
- How to enter and exit system programming
- Which system components require idle states for programming
- New programming features introduced in Release 2.0 and higher

Introduction to System Programming

The communications system offers easy-to-use, menu-driven software for system programming. After your system is installed, use this software to accommodate your company's changing needs for such enhancements and modifications as upgraded lines, additional modules, and new extension programming.

Planning Forms

Before you begin to program or modify your communications system, you should familiarize yourself with the system planning forms. Initially, system planning forms are used to plan your communications system and program your system during installation. After installation, they remain a source for all programming information on your communications system database. The information ranges from the system time and date to specific equipment configurations and feature programming.

Each planning form is either required or optional:

- Required forms are necessary to program the system.
- Optional forms are needed only if the system manager included the features or options shown on the forms.

Before you begin to program or modify your system, review the Control Unit Diagram on system planning Form 1 to identify the module types installed in the system's control unit. Use this information to program or modify lines and trunks and assign or reassign lines to extensions. Check the physical control unit to verify that the modules are placed in the slots identified on the diagram. Correct the diagram on Form 1 if there are any discrepancies.

Before you make any changes to your system, be sure to do the following:

- Mark any system modifications or changes on the appropriate planning form. Keep your planning forms up-to-date.
- Check the *Feature Reference* for possible feature interactions.
- Program the system or the system component during the appropriate idle state. See "Idle States" on page 1–47.

Types of Programming

Listed below are the three types of programming available for the communications system.

- **System Programming.** This type of programming enables the system manager to program features that affect all or most system users, and requires one of the following:
  - An MLX-20L™ telephone connected to one of the first five jacks of the first MLX module in the control unit.
  - A PC with System Programming and Maintenance (SPM) software. SPM emulates a system programming console on your PC. The PC should be connected to the lower port (labeled ADMIN) on the processor module. A PC with a modem can perform system programming remotely through the public network, or by connecting to a tip/ring extension jack (012 T/R, 016 T/R, or 008 OPT module) on the communications system. A built-in modem in the processor allows the PC and the communications system to communicate.
- **Extension Programming.** This type of programming enables individual extension users and system operators (except for Queued Call Console operators) to change their extension features to meet individual needs. For details about extension programming, see the appropriate user and operator guides.
- **Centralized Telephone Programming.** This type of programming enables the system manager to program any feature that can be programmed by individual extension users or system operators. Some features can be programmed only in centralized telephone programming. Centralized telephone programming can be done on the programming console or on a PC with the SPM software. See Chapter 5, “Centralized Telephone Programming.”

NOTE:
If your system has the Integrated Solution II* or Integrated Solution III* (IS II/III) UNIX® application, see Chapter 2, “Programming with SPM” for a list of the appropriate documentation.

* No longer orderable.

System Programming Console

The system programming console is an MLX-20L telephone connected to the system programming jack. When you begin system programming on a new system for the first time, the console must be connected to the first jack on the first 008 MLX module or 408 GS/LS-MLX module (Release 2.0 and later versions). This jack is factory set as the system programming jack and as an operator position. When you program for the first time, you can change the system programming jack to any one of the first five jacks on the first 008 MLX module or 408 GS/LS-MLX module (Release 2.0 and later versions). This allows you to program without interfering with the operator's call handling.

You can also have one or two Direct Station Selectors (DSSs) connected to the system programming console. Each DSS adds 50 extension buttons to the console, which facilitates assigning features to extensions.

An MLX-20L telephone with a DSS is shown in Figure 1–1.

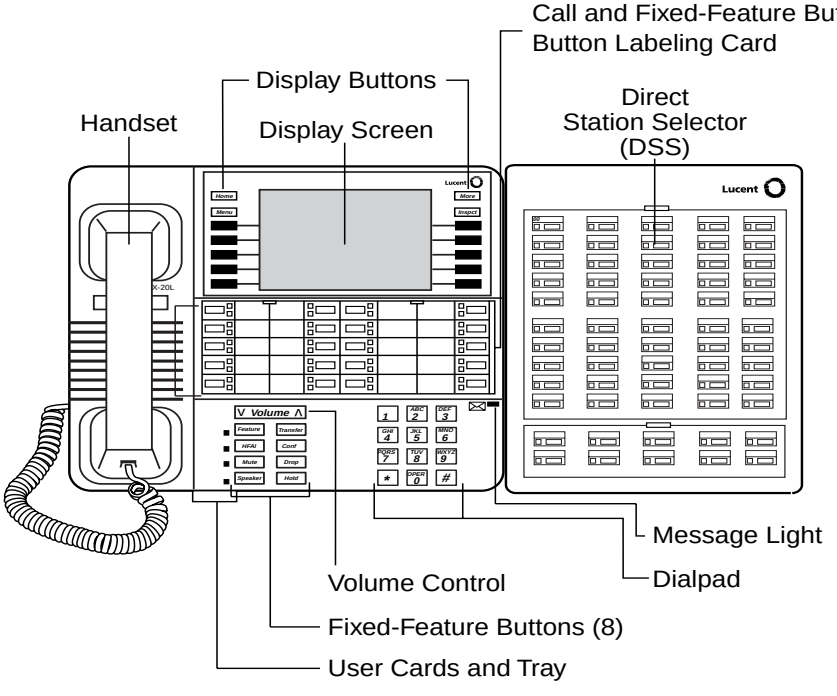

Figure 1–1. MLX-20L Telephone with Direct Station Selector (DSS)

Console Components

Table 1–1 and Table 1–2 provide descriptions of the components that make up the MLX-20L Console and the Direct Station Selector (DSS). Refer to Figure 1–1 for the location of the components.

Table 1–1. MLX-20L Console Components

Component	Function
Desk Stand (not shown)	An adjustable stand on the console and the DSS, allows a 20- or 30-degree viewing angle.
Button Labeling Cards	Cards labeled with the number or feature assigned to each line button.
Contrast Control (not shown)	A sliding control at the top of the console, used to brighten or dim the display screen.
Fixed Feature Buttons	Eight fixed display buttons for most-used features. **Feature** for viewing the Feature screen and selecting features. **HFAI** (Hands-Free Answer on Intercom) for answering voice-announced calls without the handset. **Mute** for turning the speakerphone's microphone on and off. **Speaker** for talking on a call through the speakerphone without lifting the handset. **Transfer** for sending a call to another telephone. **Conf** for adding a line or extension to a conference call. **Drop** for disconnecting an extension or line from a conference call. **Hold** for putting a call on hold.
Dialpad	Number pad for dialing telephone numbers.
Direct Station Selector (DSS)	A device that adds extension buttons and other buttons to the console. See Table 1–2.
Display Buttons	Four fixed display buttons and 10 unlabeled buttons used to view the different screens and select names, features, and options from the display screen. See "Console Buttons" on page 1–7.
Display Screen	Screen with a 7-line by 24-character display area that shows call information, features, prompts, date, and time.
Handset	The hand-held part of the console you pick up, talk into, and listen from.
LEDs	(Light-Emitting Diodes) The lights on the console that assist in checking feature status.
Line Buttons	Twenty buttons to make and receive calls; unlabeled buttons are programmable for one-step feature use.
Message Light	A red light that signals a waiting message.
User Cards and Tray	A slide-out drawer with erasable cards for noting telephone numbers and feature codes.
Volume Control	A button for adjusting the volume of the speaker, handset, headset, and ringer.

Table 1–2. Direct Station Selector (DSS) Components

Component	Function
Covers	Removable plastic covers to protect the designation cards. The top cover protects the 50 DSS button labels. The lower cover fits over the fixed buttons.
DSS Designation Cards	Cards for labeling the extension or feature assigned to each button.
DSS Buttons	Fifty buttons used for one-touch dialing of co-workers' extensions to make or transfer calls. DSS buttons are also used to page co-workers over speakerphones, to park calls, and to handle outside calls.
Fixed Buttons	Ten additional buttons, including **Message Status, Direct Voice Mail**, and three **Page** buttons. The five remaining buttons on the first DSS are not used. If a second DSS is connected to the console, the 10 buttons at the bottom of the second DSS are not used. Fixed **Message Status** button used with fixed Page buttons to see which telephones have Message Lights on. Fixed **Page** Buttons are three buttons used to select the pages of extensions that the 50 DSS buttons represent.
LEDs (Light-Emitting Diodes)	The lights that assist in checking feature status.

Console Buttons

Use the 14 buttons located on either side of the MLX-20L console display area for system programming. These buttons are arranged in two columns of seven buttons, as shown in Figure 1–2.

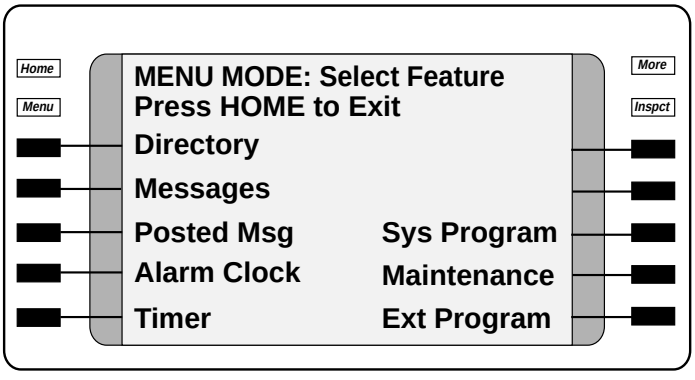

Figure 1–2. Display Buttons and Main Menu

Fixed Display Buttons

The top two buttons in each column have the same labels and functions regardless of the screen display. This type of button is called a *fixed display button.* Table 1–3 describes the functions of the fixed display buttons.

Table 1–3. Fixed Display Buttons

Button	Function
Home	Return to normal call-handling mode after you finish programming.
Menu	Display the main menu shown in Figure 1–2.
More	Display more items when a menu is continued on more than one screen, indicated by an angle bracket (>) on the upper right of the screen.
Inspct	(Inspect) View a list of lines or extensions on which a feature is programmed or the settings for a feature.

Unlabeled Display Buttons

Use the five unlabeled display buttons on each side of the screen to select commands, options, or items on the screen. The functions of these buttons vary, based on the option you select.

If you are using SPM for system programming, the simulated MLX-20L console screen on your PC screen shows the function keys that correspond to the console screen selections. This book shows function keys in a box: [ ]. For example, to save an entry, you select Enter on the console or press [F10] on your PC. See Chapter 2, “Programming with SPM,” for details about using function keys and additional information about SPM.

Console Overlay

The programmable line buttons are on the main part of the console. There are actually 20 line buttons on the console, but you can use the console overlay to program up to 34 line buttons on any extension through centralized telephone programming. Select Page 1 to access line buttons 1 through 20 and Page 2 to access line buttons 21 to 34. The top line of numbers next to each line button on the console overlay represents line buttons. See Figure 1–3 below.

Appendix E shows the button diagrams for the telephones used in the communications system. Refer to this appendix when programming buttons for other telephones.

When labels or filenames are entered, the letters A through F are displayed on the MLX-20L console screen. Additional letters can be entered by using line buttons 1 to 20 to represent letters G through Z. These letters are also displayed on the top line of the console overlay.

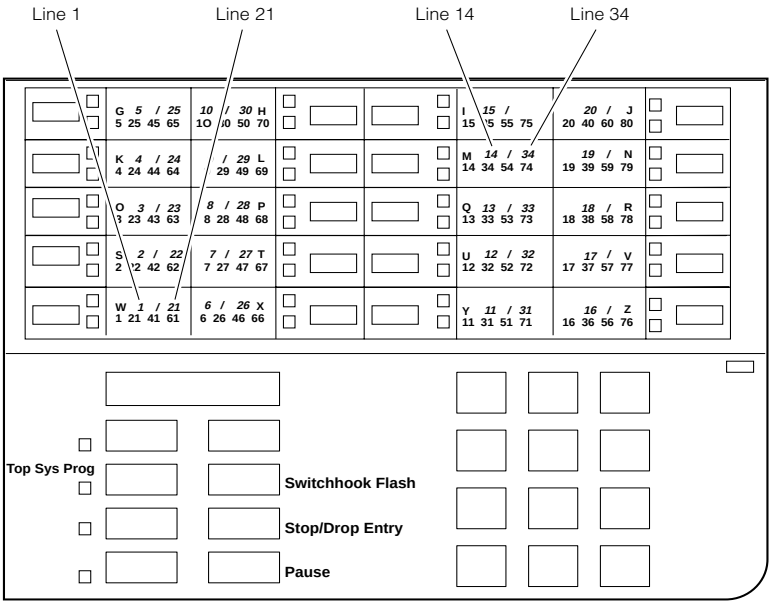

Figure 1–3. Console Overlay

When programming lines/trunks, you can select a block of 20 lines/trunks as shown on the screen below, and toggle the green or red LED associated with each line button on the console to program each line/trunk. The bottom line of numbers next to each line button on the console overlay represents the twenty lines/trunks associated with each line button. See Figure 1–3 above.

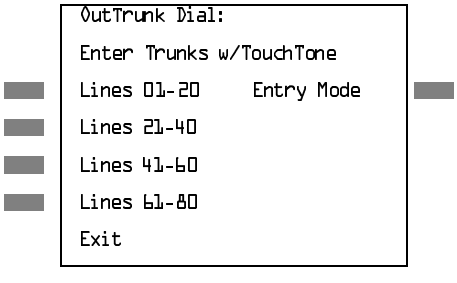

For a single line, go to
● Single Line Procedure.

For a block of lines, go to
◆ Block Procedure.

Figure 1–4. Selecting a Block of Lines/Trunks

Console and DSS Lights

The red and green lights (LEDs) next to each of the 20 line buttons on the MLX-20L console show the status of the line/trunk options. LEDs on the DSS show the status of features programmed on extensions. See Appendix C, “LED Displays,” for more information.

Console Lights

The green and red LEDs next to each button on the console display the status of the line/trunk option that is being programmed. For example, when you select `Pools` from the Lines Trunks menu, the red LED is off if the selected line is not in a pool and on if the line is in a pool. Appendix C, “LED Displays,” provides a table that shows the default LED status for line/trunk options.

DSS Lights

The lights on the DSS (if one is attached to the console) show the status of features being programmed on the extensions. When you select a feature from a menu, the red LED next to the DSS button is on, off, or flashing, depending on whether the feature is already programmed on the corresponding extension. For example, when you select `Toll Restrict` from the Restrictions menu, the red LED next to the DSS button lights for each toll-restricted extension. Appendix C, “LED Displays,” provides a table that shows the default DSS status of LEDs for system features.

Programming Procedures

The programming procedures provide step-by-step instructions for programming the communications system. This section details how to make the best use of the programming procedures.

Procedure Organization

The programming procedures in Chapter 3, “Programming Procedures,” are organized into logical groups. The programming procedures associated with a specific aspect of the system are grouped together under one heading. For example, to assign network services for PRI, you would go to the section titled “PRI” and then locate the network services procedure. For quick reference, see “System Programming Hierarchy” on page 1–24 for a list of procedures based on the menu hierarchy in Appendix B. It traces the menu path for a specific function.

Procedure Contents

Each procedure begins with a general description of the feature, followed by a summary of programming information that includes the items listed below.

Programmable by	Indicates who has permission to use the procedure.
Mode	Specifies which system mode supports the procedure: Key, Hybrid/PBX, Behind Switch, or a combination.
Idle condition	Specifies the idle state required before the procedure can be performed.
Planning form	Indicates the planning forms that provide information for the procedure.
Factory setting	Shows the factory settings, if any, for equipment or features affected by the procedure.
Valid entries	Specifies the characters, numbers, or values accepted during data entry.
Inspect	Specifies whether or not the feature status can be verified using the Inspect feature.
Copy option	Indicates whether or not the feature can be copied to another system component once it has been programmed.
Console Procedure	Provides a summary of the procedure steps using the system console.
PC Procedure	Provides a summary of the procedure steps using SPM.

This list is followed by the step-by-step procedure for programming the feature. See “Using the Programming Procedures” on page 1–15 for complete information about how to use the programming procedures.

Programming Screens

There are three types of system programming screens:

- Information screens, to view what is currently programmed on the system.
- Menu selection screens, to select options from a menu.
- Data entry screens, to enter values or to identify a specific extension or line/trunk you want to program.

Figure 1–5 shows a sample information screen. When you select Sys Program from the main menu screen (shown in Figure 1–2 on page 1-7), the screen shown in Figure 1–5 appears with system setup information.

```
System Set-up

Review and Exit

Size: xxxx

Type: xxxx

Operator: xxxx xxxx xxxx xxxx
xxxx xxxx
Exit
```

Your system information appears in place of the *x's.*

Figure 1–5. Information Screen

You cannot make changes on an information screen. Select Exit (or F5 on the PC) to continue to the next screen in the procedure.

Figure 1–6 shows a sample menu selection screen.

```
System Programming:  >

Make a Selection

System          Extensions

SysRenumber     Options

Operator        Tables

LinesTrunks     AuxEquip

Exit            NightSrvce
```

Screen title and **More** indicator (>)
Prompt
Options List

Figure 1–6. Menu Selection Screen

A menu selection screen prompts you to select one of the available options. The screen title is the first line on all screens. The second line contains a system prompt or instruction. The remaining lines of text vary, based on the selected option.

An angle bracket (>) appears in the upper right corner of menu selection screens that have additional option screens. Press **More** (or PgUp on the PC) to see the additional screens. Continue to press **More** to move through the screens and return to the original screen.

Figure 1–7 shows a sample data entry screen.

```
Assign Lines/Trunks:
Enter extension



Backspace
Exit            Enter
```

Option Selected
Prompt
Data Entry Area

Figure 1–7. Data Entry Screen

A data entry screen prompts you to enter specific data or to make specific choices. Data to be entered will be displayed with *n*'s in the text. When *n*'s appear on the data entry screen they indicate data currently programmed for the feature. An exception is the slot/port number which is displayed as *sspp* to distinguish the 2-digit slot number from the 2-digit port number.

Many screens show data entered on a previous screen, such as an extension or trunk number. Within the programming procedures, this type of variable information is shown with *x's.*

When information to be entered varies in the number of digits required (for example, a telephone number that can range from 7 to 20 digits), the data may be displayed as an uppercase *X* or *N.*

Data entry screens may also contain menu selections. Instead of entering data from the dialpad, you select options on the screen, such as Yes or No, to enable or disable a feature. To select this type of option, press either the unlabeled display button next to the option name, or the function key that corresponds to the option name. Then your selection is highlighted. To program or save the highlighted selection, press the unlabeled display button next to Enter (or F10 on the PC).

Verifying Data Entry

You can use the Inspect feature to view the entries you save. An example of how to use the Inspect feature begins with Figure 1–8. The figure shows a data entry screen with the first of two required extension numbers needed to assign analog voice and data.

```
Data Voice/Data     >
Enter voice/data pair


7108
                Delete
Backspace
Exit            Enter
```

Selected Option

Prompt

Extension entered

Figure 1–8. Inspect Example

After you enter and save *7108*, the system automatically assigns the next sequential extension jack number. This extension jack pair does not appear on the data entry screen; however, if you press **Inspct** (PgDn on the PC), the pair appears, as shown on the sample Inspect screen in Figure 1–9.

```
Voice/Data Pairs:    >
7108  7109




Exit
```

Inspect data displayed

Figure 1–9. Sample Inspect Screen

Whenever you want to return to the previous screen, select `Exit` (F5 on the PC).

The Inspect feature also allows you to check a value currently programmed for a feature. This is helpful when you are changing or modifying features. You can also use it when you program sequential extensions or lines to verify the last number programmed. See the *Feature Reference* for details about the Inspect feature.

Using the Programming Procedures

This section contains specific information about how to make the best use of the programming procedures. Make certain that you read and understand the information presented here before you begin any system programming procedures.

Format

The programming procedures are presented as numbered steps in the sample format shown below.

Console Display/Instructions **Additional Information** **PC**

▶ **1. The step instruction is shown here.**

```
Console Display

Press here
```

On the PC, press the function key that appears in the **PC** column. ➔ ▭

▶ **2. Enter the B-channel group number (nn = 1 to 69).**

```
Enter B-Channel Groups:xx
Enter the group number:
```

xx = B-channel entered in Step 1

Dial or type [*nn*].

The Step Line

The step line contains the step number and instructions, and may also contain symbols that direct you to a branch procedure. (See "Branching" on page 1–17.)

Sometimes, the step contains data entry information, which follows the step instruction and is shown in parentheses. You use the (*nn* =) value in the step instruction to replace the variable [*nn*] in the instruction. For example, in sample Step 2, the parenthetical statement (*nn* = 1 to 69) indicates that 1 through 69 are acceptable entries for the group number that you dial or type.

Console/Display Instructions Header

In most cases, the screen shown in the console display area contains the results of the *previous* step. A step with no screen indicates that you should look at the preceding step. The console key that corresponds to the option you are to select is highlighted in black, as shown in sample Step 1 above. The function key that corresponds to the highlighted console option is shown in the right column under the PC header.

When more than one but fewer than six options may be selected from the screen, each console key for each option is highlighted in gray, as shown in sample Step 3 below. To prevent clutter, when six or more options may be selected, no highlighting is shown. See "Additional Information and PC Headers" on page 1–16 for more details about how more than five options are presented.

Additional Information and PC Headers

The information displayed under the Additional Information header may contain notes, values entered in a previous step, branching instructions, general information, or specific instructions.

Sample Step 2 shows a typical display of a value entered in a previous step. The *x* corresponds to the *x* shown on the console screen. Variable screen information is always shown as *x*'s or *n*'s in italics.

Variable input information is always shown in brackets ([ ]), as *x*'s or *n*'s in italics.

In data entry steps, the area under the Additional Information header contains instructions that apply to both the console and the PC. In such cases, the PC column contains the symbol ⊂. When you see this symbol, follow the instructions under the Additional Information header, for example:

Dial or type [*nn*].

On the console, dial the entry; on the PC, type the entry.

You also see the ⊂ symbol when six or more options can be selected from a screen. Rather than highlighting all of the options and showing all of the PC keys, the Additional Information header contains instructions for both, for example:

Press the button or function key next to your selection.

On the console, press the key next to your selection; on the PC press the function key for your selection.

Branching

Many of the procedures contain features that have multiple programming options, while other procedures show more than one way to program a particular feature. To accommodate both of these programming methods, the procedures use *branching.* Branching separates the options from the main procedure and places them in subprocedures (branch procedures).

The screen shown in sample Step 3 displays three menu selections for the Network Services feature. The procedure is broken into three branches (or branch procedures) to accommodate the three menu options.

Console/Display Instructions	Additional Information	PC
▶ **3. Specify a network service.**	● ◆ ■	
Network Services: Make a selection AT&T Toll Local Misc Exit	If you select AT&T Toll, go to ● AT&T Toll Procedure.	F1
	If you select Local, go to ◆ Local Procedure.	F2
	If you select Misc, go to ■ Miscellaneous Procedure.	F3

▶ **4. If necessary, continue with this step when you complete the branch procedure.**

In the step line, the symbols (● ◆ ■ ▲ ✚ ✪ ✶) alert you to a step that contains branching. The number of symbols displayed in the step line indicates the number of available options/branches for that step and make it easy to locate the branch procedure that you want. All branch procedures *follow* the main procedure from which they are branched.

The first branch procedure from sample Step 3 is shown below.

● **AT&T Toll Procedure**

Console/Display Instructions	Additional Information	PC
▶ **1. Specify a service.**		
B-Channel Group *xx*: Select one MegacomWATS MULTIQUEST ACCUNET SDS LongDistnce SoftDefNetw Megacom 800 Exit Enter	*xx* = number entered in Step 2	
	Press the button or function key next to your selection.	
▶ **2. Save your entry.**		
Select Enter.		F10
▶ **3. Repeat Steps 1 and 2 of the main procedure for each toll group number.**		
▶ **4. For additional toll services, go to Step 1; then continue with Step 5.**		
▶ **5. Return to Step 4 of the main procedure.**		

Each branch procedure is self-contained and begins with Step 1. Be sure to complete all of the steps in a branch procedure before you return to the main procedure.

The examples in the following text refer to Steps 1 through 5 of the ● AT&T Toll Procedure (above), which is a branch of the Network Services procedure.

When you are to repeat a step *within the branch procedure,* you are instructed to go to that step. For example, at Step 4 of the branch procedure you would go back to Step 1 of the branch procedure and repeat branch Steps 1 through 4 for additional toll services. If you do not need to enter any other toll services, you continue with Step 5 of the branch procedure.

When a branch step instructs you to *return to the main procedure,* the branch procedure is complete. At Step 5 of the branch procedure you would return to Step 4 of the Network Services procedure to continue programming. In some cases, you can select Exit (F5 on the PC) to return to the menu where the branch begins; these are noted in specific programming procedures. In cases where completing the branch procedure also completes the main procedure, you are instructed to select Exit (F5 on the PC) one or more times to return to the system programming menu.

Single or Block Items

Branching is also used when you can select between programming a single item or a block of items, such as a single line or a block of lines, as shown in sample Step 5 below.

Console/Display Instructions	Additional Information	PC
▶ **5. Specify the line(s).**	● ◆	

```
B-Channel Group xx:
        Assign lines
Lines 01-20     Entry Mode
Lines 21-40
Lines 41-60
Lines 61-80
Exit
```

xx = number entered in Step 2

To select a single line, go to
● Single Line Procedure.

To select a block of lines, go to
◆ Block of Lines Procedure.

▶ **6. Continue with this step when you complete the branch procedure.**

● Single Line Procedure

▶ **1. Specify entry mode.**

Select Entry Mode. F6

▶ **2. And so on ...**

▶ **3. Return to Step 6 of the main procedure.**

◆ Block of Lines Procedure

▶ **1. Specify the block of 20 lines associated with 20 buttons on the system programming console.**

Select Lines 01-20 F1
Lines 21-40 F2
Lines 41-60 F3
Lines 61-80 F4

▶ **2. And so on ...**

▶ **3. Return to Step 6 of the main procedure.**

Saving Entries and Moving among Screens

At the bottom of each screen one or more screen keys may appear representing functions that allow you to change your entry, save your entry, or return to a previous screen. Various combinations of these screen keys appear on each programming screen. Figure 1–10 shows the QCC Priority screen with a typical display of screen keys.

```
QCC Priority x:
Enter line/trunk number
 xxx
                    Delete      F8
F4  Backspace       Next        F9
F5  Exit            Enter       F10
```

x = QCC Priority entered in earlier Step

xxx = line/trunk number (801–880)

Figure 1–10. Screen Keys

The PC keys that correspond to the screen key selections are shown here for quick reference. These PC keys do not appear on the console display screen.

Table 1–4 contains details on the use of the screen keys.

Table 1–4. Screen Keys

Display	PC Key	Function
BackSpace	F4 or ← Bksp	**Change your entry.** Select Backspace (F4 or ← Bksp on the PC) to correct your entry. Each time you press the key, the screen cursor moves backward to erase one character at a time.
Enter	F10 or Enter ↵	**Save your entry.** Typically, you select Enter (F10 or Enter ↵ on the PC) to complete a procedure and save the information. Occasionally, you must select Exit (F5 on the PC) and return to a previous screen after you use Enter. If the entry is not valid, the system may beep and/or display an error message and does not save the entry.
Delete	F8	**Delete a current entry.** Select Delete (F8 on the PC) to delete (or remove) a current entry.

Continued on next page

Table 1–4. Screen Keys *(Continued)*

Display	PC Key	Function
Next	F9	**Program sequentially numbered items.** If you are programming a group of sequentially numbered extensions, lines, or trunks, you may have the option to select Next (F9 on the PC). This saves your entry and automatically provides the number of the next extension or trunk in the sequence. Typically, you remain at the same screen until you select Next. In a few cases, you may return to an earlier screen in the procedure.
Exit	F5	**Return to the previous screen.** Select Exit (F5 on the PC) when you complete a procedure, to move up one screen in the menu hierarchy. (Appendix B provides a reference to the entire System Programming menu hierarchy.) **Exit a screen without changes.** In most cases, you select Exit (F5 on the PC) to exit from a screen without making any changes. Exceptions are noted as part of a procedure. **Complete a procedure.** *In a few cases,* you return to the System Programming menu when you select Exit. In most cases, you return to an intermediate step within the procedure. You can then select one of the options shown on the screen and continue programming, or you can continue to use Exit until you return to the System Programming menu.

Using Enter

Pressing Enter to save your entry produces one of the following results:

- The next screen in the procedure appears.
- The screen does not change and you can enter another extension or line/trunk. In most of these cases, Delete is also an option. Enter is used either to assign the extension to a group or to assign a feature to the extension. Delete is used to remove the extension from a group or to remove the feature from the extension.
- The procedure is complete and you return to a previous screen.

Console/Display Instructions	Additional Information	PC
▶ **1. Specify the extension.**		
BIS/HFAI Extensions: Enter extensions xxxx Delete Backspace Exit Enter	**SP:** “Entering an Extension”	
▶ **2. Assign or remove BIS/HFAI capability.**		
Select Enter or		F10
Delete.		F8
	You may continue to assign or remove BIS/HFAI capability to additional extensions by repeating Steps 1 and 2.	
▶ **3. Return to the System Programming menu.**		
Select Exit twice.		F5 F5

Using Next

When you are programming a feature that can apply to a sequence of extensions, lines/trunks, or groups, the screen key Next appears on the console display. Next (F9 on the PC) permits you to save your current entry and display the next number in the sequence. You can continue to press Next until you finish programming the entire sequence. When the last number in the sequence displays on the screen, press Enter (F10 or Enter on the PC) to save the final entry and move to the next step of the procedure. Procedures that allow the use of Next return you to the correct screen to continue programming as shown in Step 2 in the example below.

NOTE:
If you plan to take advantage of this key, remember to *enter the lowest number in the sequence* at the first prompt.

▶ 1. Specify whether the operator receives the alert.

```
QCC Operator xxxx:
Select one
InQue Alert Enable
InQue Alert Disable

                Next
Exit            Enter
```

xxxx = operator entered in Step 1

Select InQue Alert Enable or F1
InQue Alert Disable. F2

▶ 2. Save your entry.

Select Enter or F10
Next F9

Use Next to program the next QCC position. Go to Step 5.The next QCC operator will be displayed on Line 1. After programming the last QCC operator position, select Enter and go to Step 7.

▶ 3. Return to the System Programming menu.

Select Exit twice. F5 F5

System Programming Hierarchy

The following table shows all of the options that are available under each of the System Programming main menu options displayed on the system programming console. Following the option name is a brief description of the option and the page number where detailed instructions can be found.

Main menu options are shown in a separate box. First-level options are bold, second-level options are preceded by an asterisk (*). The remaining levels are shown with increasing degrees of indentation.

	Description	Page
System		
Restart	Restart the system (cold start)	3–2
SProg Port	Extension used for system programming	3–4
Mode	Sets the system mode.	3–11
* Key		
* Hybrid/PBX		
* BehindSwitch		
Board Renum	Renumber boards that have already been installed	3–9
MaintenBusy	Enable Automatic Maintenance Busy	3–13
* Enable		
- Auto Busy Tie Trunks		
- Enable		
- Disable		
* Disable	Disable Automatic Maintenance Busy	
Date	System date	3–15
Time	System time	3–17
Back/Restore		
* Backup	Back up system programming to a memory card	3–629
* Restore	Restore system programming from a memory card	3–639
* Auto Backup	Automatic backup	3–632
- Off	Turn off automatic backups	
- Daily	Daily backups of system programming	
- Weekly	Weekly backups of system programming	

	Description	Page
SysRenumber		
Default Numbering	Default extension numbering plans	3–20
* 2-Digit		
* 3-Digit		
* SetUp Space		
Single	Single extension renumbering	3–26
* Lines	Lines/Trunks	
* Extensions	Extensions	
* Pools	Pools (Hybrid/PBX only)	
* Group Page	Paging Group	
* GrpCalling	Calling Group	
* Adjuncts	Adjuncts	
* Park	Park	
* ARS DialOut	Automatic Route Selection dial out (Hybrid/PBX only)	
* RemoteAccs	Remote Access	
* DSS Buttons	Page buttons on the DSS	
* ListDirctNo	Listed directory number	
Block	Block extension renumbering	3–29
* Lines		
* Extensions		
* Adjuncts		
NonLocal UDP	Specify ranges of extensions on remote networked system	3–32

Operator		
Positions	System operator positions	3–42
* Direct Line*	Direct-Line Console (DLC)	3–45
* Queued Call*	Queued Call Console (QCC)	3–43
Queued Call	QCC optional features (Hybrid/PBX mode only)	3–368
* Hold Rtrn	Hold Return	3–368
- Return to Queue		
- Remain on Hold		
* HoldRelease	Automatic hold or release	3–370
- Auto Hold		
- Auto Release		
* Threshold	Queue over threshold	3–373
* ElvatePrior	Elevate priority	3–375
* InQue Alert*	Calls-In-Queue Alert	3–377
- InQue Alert Enable		
- InQue Alert Disable		

	Description	Page
Operator	*Continued*	
* Call Types	QCC Operator to Receive Call Types	3–379
- Dial 0	Dial 0 Calls	
- Priority		
- Operator		
- Follow/Frwd	Forward/Follow Me Calls	
- Unassign DID	DID call to invalid destinations	
- Priority		
- Operator*		
- ListedNumber	Calls to the Listed Directory Number	
- Priority		
- Operator		
- QCC Ext	QCC Extension calls	
- Returning	Returning calls	
- Priority		
- Operator		
- GrpCoverage	Group Coverage calls	
- Priority		
- Operator*		
* Msg Center*	Message center operation	3–387
* ExtndComplt	Extended call completion	3–389
- Automatic Complete		
- Manual Complete		
* Return Ring	Return Ring	3–391
* QCC Backup	Position Busy Backup	3–393
* Voice Annc	Voice Announce for QCC	3–395
Hold Timer	Systemwide hold timer for QCCs and DLCs	3–364
DLC Hold	DLC Operator Automatic Hold	3–366
* Auto Hold Enable		
* Auto Hold Disable		

	Description	Page
LinesTrunks	Lines/Trunks options	
LS/GS/DS1	Loop-start, ground-start or DS1 options	
* (DS1)	DS1 options	
- Type	Type of DS1 facility	3–105
- T1		
- GroundStart	Ground-start emulation on selected channels	
- Loop Start	Loop-start emulation on selected channels	
- TIE	Tie Trunk emulation on selected channels	
- TIE-PBX	Tie-PBX transmit/receive loss parameter	
- Toll	Toll transmit/receive loss parameter	
- S56	Switched 56 Data	
- Unequipped	Unused channels	
- All Ground	Ground-start emulation on all channels	
- All Loop	Loop-start emulation on all channels	
- All TIE	Tie Trunk emulation on all channels	
- TIE-PBX	Tie-PBX transmit/receive loss parameter	
- Toll	Toll transmit/receive loss parameter	
- S56	Switched 56 Data	
- All Unequip	All channels unequipped	
- DID	DID emulation on selected channels	
- All DID	DID emulation on all channels	
- S56 Data	Switched 56 Data	
- Direction		
- Intype		
- Outtype		
- AnsSupv		
- Disconnect		
- Inmode		
- Outmode		
- All S56Data	All Switched 56 Data	
- Direction		
- Intype		
- Outtype		
- AnsSupv		
- Disconnect		
- Inmode		
- Outmode		

	Description	Page
LinesTrunks	*Continued*	
-PRI	Primary Rate Interface	3–183
- Frame Format		
- D4 Compatible		
- Extended Super Frame		
-Suppression	Type of zero code suppression	3–130
- AMI ZCS		
- B8ZS		
- Signaling	Signaling mode	3–132
- Robbed Bit		
- Common Channel		
- Line Comp	Line Compensation	3–134
- ChannelUnit	Type of equipment provided by local service provider	3–137
- Foreign Exchange		
- Special Access		
* (4xx GS/LS)	Line/Trunk type for 4xx GS/LS module	
- GroundStart		
- LoopStart		
- All Ground		
- All Loop		
* (8xx GS/LS)	Line/Trunk type for 8xx GS/LS module	
- GroundStart		
- LoopStart		
- All Ground		
- All Loop		

	Description	Page
LinesTrunks	*Continued*	
Tie Lines		
* Direction	Tie trunks direction	3–139
- Two Way		
- OutGoing		
- Incoming		
* Intype	Signaling type: incoming tie trunk	3–142
- Wink		
- Delay		
- Immed		
- Auto		
* Outtype	Signaling type: outgoing tie trunk	3–142
- Wink		
- Delay		
- Immed		
- Auto		
* E&M Signal	Type of tie trunk signal	3–145
- Type 1S		
- Type 1C		
- Type 5		
* Inmode	Set incoming tie trunk to touch-tone or rotary	3–147
* Outmode	Set outgoing tie trunk to touch-tone or rotary	3–147
* Dialtone	Tie trunk dial tone	3–151
* AnsSupvr	Tie trunk answer supervision time	3–155
* Disconnect	Tie trunk disconnect time	3–158

	Description	Page
LinesTrunks	*Continued*	
TT/LS Disc		
* OutMode	Outmode Signaling for loop- or ground-start trunks	3–52
* LS Disconnect	Disconnect signaling reliability	3–61
- Yes		
- No		
DID	DID Trunk Options	3–161
* Block	Block assignment	3–161
* Type	DID trunk type	3–165
- Immed		
- Wink		
* Disconnect	DID trunk disconnect time	3–167
* ExpectDigit	Expected digits	3–170
* DeleteDigit	Delete digits	3–173
* Add Digits	Add digits	3–176
* Signaling	Type of dialing signal	3–178
- Rotary		
- Touch Tone		
* InvalDstn	Directing outside calls on invalid extension	3–181
- Send To Backup Extension		
- Return Fast Busy		
PRI	Primary Rate Interface (PRI) trunk options	3–183
* PhoneNumber	Telephone number to each PRI channel	3–187
* B-ChannelGRP	Assign B-channel groups	3–190
- Lines	Assign lines to B-channel groups	3–190
- Network Serv	Network service	3–196
- AT&T Toll	AT&T toll service	
- MegacomWATS		
- ACCUNET SDS		
- SoftDefNetw		
- Megacom 800		
- MULTIQUEST		
- LongDistnce		

	Description	Page
LinesTrunks	*Continued*	
- 5ESS Local	Local service	
- OUTWATS		
- 56/64 Digit		
- VirtPrivNet		
- INWATS		
- MCI Toll		
- Misc	Miscellaneous network service	
- Other		
- CallByCall		
- DMS-100 Local		
- Legend UDP	Private network tandem trunk	
- ElectTandNwk		
- Copy Number	Copy telephone number to send	3–203
- Copy PhnNum to NumToSend		
- Do Not Copy Phone Number		
- IncomingRtg	Incoming Routing	3–206
- Routing by Dial Plan		
- Route by Line Appearance		
- Route Directly to UDP		
* NumberToSend	Telephone number to send to the network	3–209
- Extension Only		
- Base Number with Ext.		
- Line Telephone Number		
* Test TelNum	Line/trunk test telephone number	3–213
* Protocol		
- Timers	Timers and counters	3–215
- T200 Timer		
- T203 Timer		
- N200Counter		
- N201Counter		
- K Counter		
- T303 Timer		
- T305 Timer		
- T308 Timer		
- T309 Timer		
- T310 Timer		
- T313 Timer		
- T316 Timer		
- TEI	Terminal equipment identifier	3–221

	Description	Page
LinesTrunks	*Continued*	
*DialPlanRtg	Dial Plan Routing	3–224
- Service	Service	
- AT&T Toll	AT&T toll service	
- Megacom 800		
- ACCUNET SDS		
- SoftDefNetw		
- MULTI QUEST		
- MegacomWATS		
- LongDistnce		
- Local	Local service	
- INWATS		
- 56/64 Digit		
- VirtPrivNet		
- OUTWATS		
- Misc	Miscellaneous service	
- Other		
- Any Service		
- No Service		
- Patterns		
- TotalDigits		
- DeleteDigit		
- Add Digits		
* OutgoingTbl	Outgoing tables	3–238
- NetwkSelect	Network selection	3–238
- SpecialServ	Special services	3–241
- Pattern		
- Operator		
- Local Operator		
- Presubscribed Carrier		
- No Operator		
- Typeof Number		
- National		
- International		
- DeleteDigit		

	Description	Page
LinesTrunks	*Continued*	
- CBC Service	Call-by-Call service	3–249
- Patterns		
- Voice Data		
- Voice Only		
- Data Only		
- Voice/Data		
- NetworkServ	Network service	
- AT&T Toll	AT&T toll service	
- Megacom WATS		
- ACCUNET SDS		
- SoftDefNetw		
- LongDistnce		
- Local	Local service	
- OUTWATS		
- 56/64 Digit		
- VirtPrivNet		
- Misc	Miscellaneous service	
- Other		
- No Service		
- Delete Digit	Number of digits to delete	
* Switch Type	Type of switch at far end	3–184
- 4ESS		
- 5ESS		
- DMS-250		
- DMS-100		
- DEX-600E		
- Legend-NTWK	For **PRI** tandem trunks	
- Legend-PBX	For **PRI** tandem trunks	
Copy	Copy options for lines/trunks	3–95
* Single		
* Block		
Remote Access	Remote Access options	
* LinesTrunks	Remote Access trunk assignment	3–505
- Dedicated		
- Shared		
- No Remote		
* Non-TIE	Non-Tie Lines: Remote Access options	
- BarrierCode	Barrier code requirements	
- Barrier Code Required		
- BarrierCode Not Required		
- Restriction	Non-Tie trunk restriction	
- Unrestricted		
- Outward Restrict		
- Toll Restrict		

	Description	Page
LinesTrunks	*Continued*	
- ARS Restrict	Non-Tie trunk ARS Facility Restriction Level	
- Allow List	Non-Tie trunk Allowed Lists assignment	
- DisallowLst	Non-Tie trunk Disallowed Lists assignment	
* TIE Lines	Tie lines: Remote Access options	
- BarrierCode	Barrier code requirements	3–522
- Barrier Code Required		
- BarrierCode Not Required		
- Restriction	Tie trunk restriction	
- Unrestricted		
- Outward Restrict		
- Toll Restrict		
- ARS Restrict	Tie and DID trunk ARS Facility Restriction Level	
- Allow List	Tie and DID trunk Allowed Lists assignment	
- Disallow List	Tie and DID trunk Disallowed Lists assignment	
* BarrierCode	Barrier code options	3–515
- SProg/Maint	Not currently available	
- Code Info	Barrier code information	
- Code Length	Barrier code length	
- Code Entry	Barrier code assignment	
- Restriction	Remote Access with barrier code: restrictions	
- Unrestricted		
- Outward Restrict		
- Toll Restrict		
- ARS Restrict	Remote Access with barrier code: ARS Restriction	
- Allow List	Remote Access with barrier code: Allowed Lists	
- DisallowLst	Remote Access with barrier code: Disallowed Lists	
* AutoQueuing	Automatic Callback on busy pools or extensions	3–508
- Enable		
- Disable		
Pools	Trunk to Pools assignment	3–91
Toll Type	Toll prefix (1 or 0) requirement	3–63
HoldDiscnct	Hold disconnect interval	3–67
PrncipalUsr	Principal user for personal line	3–70
QCC Prior	QCC queue priority level	3–73
QCC Oper	QCC operator to receive calls	3–77
LS-ID Delay	LS-ID delay for 800 LS-ID module	3–81

	Description	Page
LinesTrunks	*Continued*	
Clock Sync	Clock Synchronization (100D or 800 NI-BRI modules)	3–85
* Primary	Primary Clock	
- Loop		
- Local		
* Secondary	Secondary Clock	
- Loop		
- Local		
* Tertiary	Tertiary Clock	
- Loop		
- Local		
BRI	Basic Rate Interface	
* SPID/DN	Service Profile Identifier (SPID) and Directory Number (DN)	3–261
* Timers	BRI Timers	3–264
- T200 Timer		
- T203 Timer		
- T303 Timer		
- T305 Timer		
- T308 Timer		
T1 Data NW	Switched 56 Dial Plan Routing	3–124
UDP	Switch identifiers for remote systems connected to tandem trunks	3–100
* SwNum-Single	Number a single tandem trunk	
* SwNum-Block	Number a block of tandem trunks	

Extensions		
LinesTrunks	Lines or trunks (buttons on a telephone)	3–268
Line Copy	Copy outside line/trunk options	3–274
* Single		
* Block		
Dial OutCd	Pool dial-out code restrictions	3–317
Restriction	Outward/toll restrictions	3–320
* Unrestricted		
* Outward Restrict		
* Toll Restrict		
RestrctCopy	Copy calling restrictions, Allowed Lists, and Disallowed Lists	3–322
* Single		
* Block		
Account	Account code entry	3–330
BIS/HFAI	Built-in Speakerphone/Hands-Free Answer on Intercom	3–288
Call PickUp	Call pickup group	3–398
VoiceSign1	Assign voice pair to provide Voice Announce to Busy	3–288

	Description	Page
Extensions	*Continued*	
Ext Status	Extension status: hotel or Group Calling/CMS	3–466
Group Page	Paging group members	3–400
Group Cover	Coverage group members	3–403
Grp Calling	Calling group members and options	3–414
* Hunt Type	Hunt Type	3–414
- Circular		
- Linear		
- Most Idle		
* Delay Announce	Group Calling delay announcement	3–417
- Primary		
- Secondary		
- Interval		
- Repeat		
* GrpCoverage	Group Coverage receiver	3–425
* Message	Group Calling message waiting indicator	3–434
* Queue Alarm	Group Calling Calls-In-Queue Alarm threshold	3–437
- Alarm Threshold 1		
- Alarm Threshold 2		
- Alarm Threshold 3		
* Xtnl Alert	Group Calling external alert for Calls-In-Queue Alarms	3–437
* Overflow	Group Calling overflow and thresholds	3–428
- Number Based		
- Time Based		
- Prompt Based		
* Members	Calling group members	3–408
* Line/Pool	Group Calling line/trunk or pool assignment	3–411
* Group Type	Group type	3–443
- Auto Login		
- Auto Logout		
- Integ VMI		
- Generic VMI		
* Queue Control	Group Calling Queue Control	3–446
ARS Restrict	Assign Facility Restriction Level (Hybrid/PBX only)	3–327
Mic Disable	Limit the use of speakerphone on an MLX telephone	3–332
Remote Frwd	Allow or disallow Call Forwarding to outside number	3–337
Auth Code	Authorization codes	3–334
Delay Frwd	Delayed Call Forwarding	3–340
TrkTransfer	Enable/disable trunk-to-trunk transfer	3–342
Cover Delay	Delay before calls sent to coverage	3–345
* Primary		
* Secondary		
HotLine	Enable/disable HotLine	3–354

	Description	Page
Extensions	*Continued*	
DisplayPref	Preference for incoming call display	3–356
* Calling Name		
* Calling Num		
* Both		
ServiceObs	Service Observing	3–358
* Observer		
* Warning		
- Yes		
- No		
* Members		
Options		
Transfer	Transfer options	
* Return Time	Transfer return time (number of rings)	3–451
* One Touch	One-Touch Transfer/One-Touch Hold	3–453
- Transfer		
- Manual		
- Automatic		
- Hold		
*Audible	Transfer audible	3–455
- Music On Hold		
- Ringback		
* Type	Type of transfer	3–457
- Voice Announce		
- Ring		
CampOn	Camp-On return time	3–459
CallParkTrn	Call Park return time	3–461
Delay Ring	Number of rings for the Delay Ring interval	3–462
Callback	Callback request number of rings	3–464
Ext Status	Extension status mode	3–466
* Hotel		
* GrpCall/CMS		
SMDR	SMDR options	
* Format	SMDR format	3–469
- Basic SMDR		
- ISDN SMDR		
* Call Length	Minimum length of time before a call is recorded	3–471
* Call Report	SMDR call report type	3–473
- In/Out	Incoming and outgoing calls	
- Out Only	Outgoing calls only	
* New Page		
* Auth Code		
* Talk Time	Talk time duration	3–477
* UDP		3–479
- Log In/Out	Log Incoming and outgoing UDP calls	
- Log None	Log no UDP calls	

	Description	Page
Options	*Continued*	
Inside Dial * Inside * Outside	System dial tone	3–481
Reminder Srv	Time of day reminder service calls are canceled	3–482
Unassigned * QCC Queue * Extension * Grp Calling	Extension number to receive redirected calls made to an unassigned extension	3–484
BehndSwitch * Transfer * Conference * Drop	Host system (Behind Switch mode) dial codes for Transfer, Conference, or Drop	3–488
Recall Timer * 350 ms * 450 ms * 650 ms * 1 sec	Length of timed flash sent when Recall is used	3–490
Rotary * Delay * No Delay	Dialed digits on rotary dial trunks	3–55
Inter-Digit	Interdigit timers	3–492
Ringing Freq	Ringing Frequency for 016 T/R Module	3–57
SecDT Timer	Second Dial Tone Timer	3–59

Tables	Description	Page
Allow List	Establish Allowed Lists	3–492
Allow To	Assign an Allowed List to a given extension	3–494
Disallow	Establish a Disallowed List	3–497
Disallow To	Assign a Disallowed List to a given extension	3–499
ARS	Program Features for Automatic Route Selection (ARS)	
* ARS1+7Dial	1 + 7-Digit Dialing Requirements	3–530
- Within Area Code		
- Not Within Area Code		
* ARS Input	Create/Change ARS Tables	3–532
- 6-Digit		
- Area Code		
- Exchange		
- 1+7		
* Sub A Pools	Subpattern A pool routing	3–539
* Sub A FRL	Subpattern A Facility Restriction Level (FRL)	3–543
* SubA Absorb	Subpattern A digit absorption	3–547
* Sub A Digit	Subpattern A other digits	3–551
* Sub B Start	Subpattern B start time	3–535
* Sub B Stop	Subpattern B stop time	3–535
* Sub B Pool	Subpattern B pool routing	3–539
* Sub B FRL	Subpattern B Facility Restriction Level (FRL)	3–543
* SubB Absorb	Subpattern B digit absorption	3–547
* Sub B Digit	Subpattern B other digits	3–551
* SpeclNumber	N11 Special Numbers Table	3–554
- ARS FRL		
- ARS Digit		
* Dial 0	Dial 0 Table	3–558
- ARS Pool		
- ARS FRL		
- ARS Digits		
* Sub A Data	Voice and/or data routing for Subpattern A	3–562
- Voice Only		
- Data Only		
- Voice/Data		
* Sub B Data	Voice and/or data routing for Subpattern B	3–562
- Voice Only		
- Data Only		
- Voice/Data		

	Description	Page
Tables	*Continued*	
UDP Routing	Routing for non-local UDP calls	3–565
* Pool	Assign pools to routes	3–566
* FRL	Assign FRLs to routes	3–569
* Absorb	Digit absorption	3–572
* Digits	Added (prepended) digits	3–576
* Data	Voice and/or data routing	3–579
- Voice Only		
- Data Only		
- Voice/Data		
AuxEquip		
MusicOnHold	Line/trunk jack for a music source	3–291
Ldspkr Pg	Loudspeaker Paging equipment	3–293
Fax		3–295
* Extensions	Extension jack to be used for a fax machine	
* Msg Waiting	Message waiting indication	
* Threshold	Fax threshold duration	
MaintAlarms	Maintenance alarms	3–300
VMS/AA	Voice Messaging System and Automated Attendant	3–302
* TransferRtn	Transfer Return (number of rings)	
* TT Duration	Touch-tone duration	
* TT Interval	Touch-tone interval	
CTI Link	Computer Telephony Integration Link port	3–306

	Description	Page
NightSrvce		
GroupAssign * Extensions * Calling Grp	Night Service group assignment	3–582
OutRestrict	Password for use with out of hours calls	3–586
Emergency	Emergency numbers free from password requirement	
ExcludeList	Extensions exempt from Night Service restrictions	
Start	Time of day Night Service is activated	3–590
Stop	Time of day Night Service is deactivated	3–590
Time Control * On * Off	Turn Night Service Time Control on or off	3–590
Cover Control		3–594

Labeling	Labeling Options	
Directory		
* System	System directory and internal speed dial numbers	3–607
* Extension	Extensions to identify inside callers	3–596
* Personal	Personal Directory listings	
LinesTrunks	Label used to identify line or trunk	3–599
PostMessage	Change posted messages	3–601
Grp Calling	Calling groups	3–604

Data	Data Options	
Voice/Data	Analog multiline telephones with voice and data	3–619
2B Data	Enable 2B Data at MLX port	3–621

	Description	Page
Print	Print system reports	3–613
All	Print all reports	
SysSet-up	System Information report	
Dial Plan	Dial Plan report	
Labels	Label Information report	
Trunk Info	Trunk Information report	
* TIE	Tie Trunk Information report	
* DID	DID Trunk Information report	
* Loop/Ground	GS/LS Trunk Information report	
* General	General Trunk Information report	
* S56 Data	Switched 56 Data Report	
T1 Info	DS1 Information report	
PRI Info	PRI (Primary Rate Interface) Information report	
RmoteAccess	Remote Access (DISA) report	
Oper Info	Operator Information report	
AllowList	Allowed Lists report	
AllowListTo	Access To Allowed Lists report	
DisallowLst	Disallowed Lists report	
DisallowTo	Access To Disallowed Lists report	
ARS	Automatic Route Selection report	
Ext Direct	Extension Directory report	
Sys Direct	System Directory report	
Group Page	Group Paging report	
Ext Info	Extension Information report	
GrpCoverage	Group Coverage Information report	
Grp Calling	Direct Group Calling Information report	
NightService	Night Service Information report	
Call Pickup	Group Call Pickup report	
Error Log	Error Log report	
Auth Code	Authorization report	
BRI Info	BRI Information report	
NonLcl UDP	Non-Local Dial Plan report	
ServiceObs	Service Observing Information report	

	Description	Page
Cntr-Prg	Centralized telephone programming	
Program Ext	Extension programming	4–4
Copy Ext	Copy extension programming	4–13
Language	Language options	
SystemLang * English * French * Spanish	System language	3–6
Extensions * Single - English - French - Spanish * Block - English - French - Spanish	Language for a single extension or block of extensions	3–313
SMDR * English * French * Spanish	SMDR language	3–467
Printer * English * French * Spanish	Language for printed reports	3–611

Access to System Programming from the MLX-20L Console

Follow the steps below to begin system programming. All of the procedures in Chapter 3, “Programming Procedures,” begin at the System Programming menu shown in Step 4 of the following procedure.

For information about accessing system programming through a PC with SPM, see Chapter 2, “Programming with SPM.”

Console Display/Instructions **Additional Information** **PC**

▶ 1. Display the Menu Mode (main menu) screen.

```
                12/24 11:30

Anne            Kim
Andre           Jorge
Jose            Sarah

Show Number     Next Page
```

Press **Menu.**

▶ 2. Select System Programming.

```
MENU MODE: Select Feature
Press HOME to Exit
Directory
Messages
Posted Msg      Sys Program
Alarm Clock     Maintenance
Timer           Ext Program
```

Note: Ext Program does not appear on this screen if the programming console is a QCC.

▶ 3. Display the System Programming menu.

```
System Set-up:
Review and Exit
Type: xxxx
Mode: xxxx
Operator:       xxxx xxxx
xxxx xxxx       xxxx xxxx
Exit
```

On the System Set-up screen, system information appears in place of the *x's.*

Type = Voice/Data
Mode = Key, Hybrid/PBX, or Behind Switch
Operator = Position extension numbers

Select Exit.

▶ 4. Make a selection.

```
System Programming:     >
Make a selection
System          Extensions
SysRenumber     Options
Operator        Tables
LinesTrunks     AuxEquip
Exit            NightSrvce
```

Press the button next to your selection.

System Programming Menu

Figure 1–11 shows the two screens that make up the System Programming menu. Table 1–5 describes the options.

Table 1–5. System Programming Menu Options

Option	Description
System	Set system operating conditions.
SysRenumber	Select the system numbering plan and/or reassign extension numbers with 1- to 4-digit numbers that are more appropriate or convenient for your company.
Operator	Assign or remove operator positions, and program operator features (such as Operator Hold Timer or QCC options).
LinesTrunks	Program line/trunk options.
Extensions	Program extension features (such as line assignments).
Options	Program systemwide features (such as Transfer Return).
Tables	Program features that require entering information in a table (such as Allowed Lists and Disallowed Lists).
AuxEquip	Program auxiliary equipment connected to the system (such as loudspeaker paging and fax).
NightSrvce	Program Night Service features.
Labeling	Program the labels shown on display telephones (such as Posted Messages and entries in the System Directory).
Data	Specify extensions that need voice and data capability.
Print	Print system programming reports (such as system configuration and extension assignments).
Cntr-Prog	Perform centralized telephone programming (assign features to specific buttons on telephones).
Language	Select the language for: the system, MLX display telephones, SMDR reports, and print reports.

```
System Programming:  >
Make a Selection
System          Extensions
SysRenumber     Options
Operator        Tables
LinesTrunks     AuxEquip
Exit            NightSrvce
```

```
System Programming:  >
Make a Selection
Labeling        Language
Data
Print
Cntr-Prg
Exit
```

Figure 1–11. System Programming Menu Screens

Exiting System Programming

Use the information in Table 1–6 to return to the System Programming menu, the main menu (Menu Mode screen), or the Home screen from within a programming screen.

Table 1–6. Exiting System Programming

To return to ...	On the console press:	On the PC press:
Previous menu	Exit	F5
Main Menu	Menu	End
Normal call handling	Home	Home

Idle States

Some programming procedures can be started only when the entire system, or some part of it, such as a trunk or an extension, is idle (not in use). Some procedures require that a trunk or extension be idle only at the instant of programming. Lengthy procedures require the system, trunk, or extension to remain idle until programming is completed. These procedures wait for the system, trunk, or extension to become idle and then prevent the initiation of any new calls. This condition is called *forced idle.*

NOTE:
If a procedure requires an idle condition, do the programming outside of normal business hours.

If a procedure requires that the system be idle and the system is busy when you begin, you see the screen shown in Figure 1–12.

```
System Busy   Pls Wait

Dial Code:nnnn   S/P:ss/pp



Exit            Enter
```

nnnn = a previously entered extension
ss/pp = the slot and port number of the busy extension

Figure 1–12. System Busy Screen

The screen changes to the appropriate programming screen when the system is no longer busy.

System Forced Idle

When the entire system is forced idle, no calls can be made or received. The following procedures can be performed only when the entire system (every line and every extension) is idle:

- Select system mode
- Identify system operator positions
- Renumber system
- Renumber boards
- Identify extensions with voice signal pairs for the Voice Announce to Busy feature
- Identify extensions that need voice and data features
- Restore system programming information
- Identify the Music On Hold jack

When the system is forced idle, the following occurs: Multiline telephone users hear a signal, indicating that the telephone cannot be used; display telephone users see the message `Wait: System Busy`; single-line telephone users do not hear a dial tone.

Line or Trunk Idle

Because these procedures require the line or trunk to be idle *only* at the instant of programming, the line or trunk is not forced idle (as described in the previous paragraph). The following procedures can be performed only when the line or trunk being programmed is idle:

- Identify loudspeaker paging extension jack
- Assign trunks to pools
- Specify incoming or outgoing DID or tie-trunk type
- Specify tie-trunk direction
- Specify tie-trunk E&M signal

Extension Forced Idle

When an extension is forced idle, no calls can be made or received on that telephone or data equipment. The following procedures can be performed only when the extension being programmed is idle:

- Assign calling restrictions
- Assign pool dial-out restrictions
- Copy extension assignments
- Assign lines, trunks, or pools to extensions
- Assign labels to a personal directory
- Use centralized telephone programming

When the telephone is forced idle, the following occurs: Multiline telephone users hear a signal, indicating that the telephone cannot be used; display telephone users see the message `Wait: System Busy`; single-line telephone users do not hear a dial tone.

100D Module Idle

The following procedures can be performed only when the 100D module is idle:

- Specify board type
- Specify frame format
- Specify board signaling format
- Specify board suppression format
- Specify board facility compensation

Forced Idle Reminder Tones

The forced idle reminder tone is a high-low “doorphone” tone — 400 ms of 667-Hz tone followed by 400 ms of 571-Hz tone. The tone is provided under the following circumstances:

- At the extension, to remind the user that the system or the extension is in the forced idle state
- At the programming console or at a PC running SPM, to remind the system manager that the system (or at least one extension) is in the forced idle state because of administrative activity

In Release 1.1 and higher of the communications system, forced idle reminder tones occur every 20 seconds. You can adjust the volume of these tones with the volume control.

Product Enhancements

This section briefly describes these enhancements and new features for each release of the MERLIN LEGEND Communications System.

The procedures that cover these enhancements are included in this book. See *Feature Reference* for details about each enhancement.

System planning for the enhancements is included in *System Planning.*

Release 6.1 Enhancements (August, 1998)

Release 6.1 includes all Release 6.0 functionality, plus the enhancements listed below.

Private Networking

Release 6.1 enhances the functioning of the networked MERLIN LEGEND Communications System in a number of ways:

- Centralized Voice Messaging
- Group Calling Enhancements
- Transfer Redirect
- Direct Station Selector
- Call Forwarding
- SMDR
- Decrease in Call Set-Up Time
- PRI Switch Type Test

Centralized Voice Messaging

One or more MERLIN LEGEND systems (Release 6.1 or later) can share the voice messaging system (VMS) of another MERLIN LEGEND system, provided the systems are directly connected to the system with the VMS. In this configuration, the system containing the VMS is known as the hub. This sharing of the VMS is called “Centralized Voice Messaging.” Centralized Voice Messaging includes the functions of voice mail, Automated Attendant, and fax messaging. See the *Network Reference* for detailed information about Centralized Voice Messaging.

Centralized Voice Messaging offers the following benefits:

- Private-networked MERLIN LEGEND systems do not need a local VMS. Having systems use a centralized VMS instead of separate VMS’s is more economical.

- Users that travel between sites can dial the same digits anywhere in the private network to access the voice messaging system. For example, a salesperson headquartered in Cincinnati can dial the same four digits at the company's Los Angeles office to retrieve voice messages.
- Productivity is enhanced because messages can be forwarded and broadcasted to all personnel within the private network.
- Calling groups on networked systems can send overflow coverage to a shared VMS, so that an incoming caller can leave a message instead of waiting in a queue.
- The VMS can light the Message Waiting lights on multiple MERLIN LEGEND systems in a private network. This greater efficiency saves time because a user only has to look at his or her telephone to determine if he or she has a message.

Group Calling Enhancements

A calling group can have a *single* non-local member that is defined by the Uniform Dial Plan and exists on another MERLIN LEGEND Communications System connected by a tandem trunk to the local system. If a calling group contains a non-local member, the non-local member must be the *only* member in the calling group. See the *Network Reference* for details.

A calling group containing a single non-local member can be used for the same purposes as a calling group containing local extensions, including:

- **Night Service.** Night Service coverage can be provided across a private network to a centralized Automated Attendant, a non-local calling group, a QCC queue, a DLC, or any individual extension on the remote system, such as a night bell.
- **Group Coverage.** Group Coverage can be provided across a private network to a VMS, a non-local calling group, a QCC queue, a DLC, or any individual extension on the remote system.
- **Calling group overflow coverage.** Calling group overflow coverage can be provided by a centralized VMS, a non-local calling group, a QCC queue, a DLC, or any individual extension on the remote system.
- **Calls directed to another system.** Lines connected to remote systems can be answered by any extension programmed to answer the call, such as a centralized Automated Attendant or a system operator (QCC or DLC).

Transfer Redirect

When an Automated Attendant transfers a call to a non-local extension, the transferring MERLIN LEGEND system monitors the call to ensure that it is answered. If the non-local extension is not available or the call is not answered within the transfer redirect timeout period (fixed at 32 seconds), the call stops ringing at the non-local destination and is redirected to the extension on the same system as the Automated Attendant that is programmed to receive redirected calls. This redirect extension can be a QCC queue, a calling group, or an individual extension.

Direct Station Selector

Now users can press a Direct Station Selector (DSS) button for a non-local extension to make or transfer calls to that extension. However, no busy indication is displayed by the DSS for non-local extensions.

Call Forwarding

The Forward feature now can be used to send calls to non-local extensions across the private network.

SMDR

In addition to SMDR options for non-network calls placed to and from the local system, system managers now can program SMDR to log incoming and outgoing UDP calls, or they can choose to log no UDP calls. The factory setting is to record all UDP calls.

Customers who use a call accounting system may not want to fill the database with calls coming and going across the private network. These customers may choose not to log UDP calls.

Decrease in Call Set-Up Time

The set-up time for a call across a private network has been reduced by programming the number of UDP digits expected.

PRI Switch Type Test

A new maintenance test, the PRI Switch Type Test, has been created to allow Lucent Technologies technicians or authorized dealers to automatically determine if each end of the PRI tandem trunks has been programmed correctly.

Service Observing

Service Observing allows one extension to listen in on (observe) a call at another extension. A typical application of this feature is that of a Customer Service supervisor observing how a Customer Service representative handles calls.

The Service Observing group can consist of from one extension to all extensions in the system, including other Service Observers. Up to 16 Service Observing groups can be programmed. The Service Observer and the observed extension must be on the same system.

The observer activates Service Observing either by pressing a Service Observing button and then dialing an extension number or by pressing a DSS or Auto Intercom button. The Service Observer must use an MLX telephone to observe an extension; the telephone at the observed extension can be of any type.

A warning tone that alerts the observer, the observed extension, and the caller that Service Observing is occurring can be set to On or Off through System Programming. The factory setting is On.

Win SPM

The System Programming and Maintenance (SPM) software is now available in a Windows format called *Win SPM*. For Release 6.1 and later systems, Win SPM provides a graphical user interface (GUI) for those tasks must commonly performed by the system manager. Pictorial representations of system components, such as modules and their vintages and the creation of MLX telephone button labels, appear on Win SPM. Win SPM also provides a DOS-emulator mode to program tasks not currently supported by the GUI and to program a MERLIN LEGEND system of Release 6.0 or earlier. Win SPM is available on CD-ROM and is supported in Windows 95, Windows NT, and Windows 98.

Windows NT Driver

Now available is the MERLIN LEGEND Windows NT PBX driver. When coupled with the CentreVu Telephony Services application, the driver provides true server-based Computer Telephony Integration (CTI). The new driver requires a MERLIN LEGEND system of Release 5.0 or later and servers and PCs that support the applications.

Release 6.0 Enhancements (February, 1998)

Release 6.0 includes all Release 5.0 functionality, plus the enhancements listed below.

Private Networks

In Hybrid/PBX mode systems only, MERLIN LEGEND Communications Systems can be networked with one another or with DEFINITY® Enterprise Communications Server (ECS) and ProLogix™ Communications Systems in private networks. In previous releases, this functionality is available using tie lines, but users handle calls between networked switches as outside calls. In this release, dialing the pool access code is not necessary for a call going from one networked switch to another. Also, delay-start tie trunks or T1 trunks programmed as PRI can act as *tandem trunks* to connect networked systems.

Available for Hybrid/PBX mode systems, the private network features of the MERLIN LEGEND Communications System Release 6.0 provide the following advantages for geographically dispersed organizational sites:

- **Intersystem Calling.** In a private network, users on one local system can call extensions on other systems in the network. Release 6.0 can support 2-, 3-, 4-, or 5-digit dial plans. They dial these extensions as inside calls. To implement this function, the system manager programs the extension ranges of remote networked switches to create a non-local dial plan. This programming does not actually affect numbering on the remote system. To correctly set up systems for transparent calling among non-local dial plan extensions, the system manager assigns networking tie and/or PRI tandem trunks to pools. Then he or she programs as many as 20 patterns,

associates with routes, Facility Restriction Levels (FRLs), digit absorption, and digit prepending. This allows ARS-like routing of non-local dial plan calls. In addition, system managers can control whether calling name, calling number, or both are shown at MLX display telephone for incoming calls across PRI tandem trunks.

- **Toll Savings.** Private networked tandem trunks may allow you to realize significant cost savings on long-distance and toll calls by performing tandem switching in the following two ways:
  - Callers on a local system, or individuals dialing in to remote access at a local system, can reach the public switched telephone network (PSTN) via outside trunks connected to other systems in a private network, avoiding toll charges or decreasing the cost of toll calls. No special dialing is required. For example, an organization might have a main office in Boston and a subsidiary office in New Jersey, connected by networked private tandem trunks between two systems. A user in the New Jersey office who wishes to make an outside call to the 617 area code (Boston) can do so through a line/trunk connected to the system in Boston. For example, he or she might dial, *9 1 617 555 1211*. The local ARS tables would route this call over the private network trunks and use the ARS tables of the remote system in Boston to route this call. The system managers at each end of a private network set up ARS and Remote Access features to implement this functionality.
  - In addition, local organizations or incoming DID calls use private networked trunks to make intersystem calls between networked systems, which may be geographically distant from one another, also resulting in toll savings.
- **Service Cost Savings.** In addition to toll call saving, there are two ways that organizations can save on service costs incurred from telecommunications providers that provide public switched telephone network access:
  - You order a point to point T1 facility from a service provider, then use system programming to set it up for PRI signalling. As necessary, a service provider can provide amplification on the T1 facility, but does not supply switching services.
  - You can tailor your use of PRI B-channels with drop-and-insert equipment that allows fractional use of B-channels for dedicated data/video communications between systems at speeds greater than 64kbps per channel or 128 kbps for 2B data, while keeping the remaining B-channels for PRI voice traffic. The PRI D-channel must remain active.
  - You can tailor use of T1 channels to support both T1-emulated tandem tie service and T1 Switched 56 service for data communications at 56 kbps per channel, allowing 2B data transfers at 112 kbps. You can also use drop-and-insert equipment to provide fractional T1 use.

- **Voice Mail and Auto Attendant.** Private network systems should have their own local voice mail and/or auto attendant applications as well as their own external alerts and Music On Hold sources. However, a single auto attendant can transfer calls throughout the private network. It can answer only those calls that arrive on the PSTN facilities of the system where it is connected.

Although many features are available using tie trunks for private network connectivity, PRI tandem trunks provide greatly enhanced features and faster call setup. For this reason, PRI is recommended over tie functionality in private networks.

Group Calling Enhancements

Release 6.0 and later systems include Group Calling features that enhance group calling operations.

Queue Control

The system manager can control the maximum number of calls allowed in the primary calling group queue for calls that arrive on certain facilities often assigned to calling groups. When the number of the calls in queue reaches the programmed maximum, subsequent callers receive a busy signal.

Queue control applies to calls received on the following types of facilities:

- DID (Direct Inward Dialing)
- PRI facilities programmed for dial-plan routing
- All calls transferred from a VMI (voice messaging interface) port
- Dial-in Tie

Queue control also applies to internal calls to a calling group and calls to a calling group through the QCC.

Internal calls that dial **#0** or **#800** and are directed to a calling group programmed as Position-Busy Backup are eligible for queue control. Calls that come in on a trunk assigned to the Queued Call Console (QCC) are not eligible for queue control if the call is directed to a calling group designated as Position-Busy Backup.

Remote-access calls to a calling group, coverage calls directed to a calling group, calls directed to calling group through QCC Position-Busy backup, and all other outside calls are not eligible for queue control.

Prompt-Based Overflow

System managers can activate the Prompt-Based Overflow option. This option allows callers waiting in queue and listening to a delay announcement to press the # key in order to reach the overflow receiver for the group, which may be the QCC queue or another calling group (including a calling group assigned for a voice mail system).

All three overflow distribution options—based on the number of calls, the time a caller has waited, and according to the caller's prompt—may be used at one time. In this case, time-based and number-of-calls based options take precedence over overflow distribution based on the caller's prompt.

When prompt-based overflow distribution is used, an extra TTR must be provided for each delay announcement device assigned to the associated calling group. The delay announcement informs the caller of the # key option to exit the queue and leave rather than waiting for an agent. If no TTR is available when a calling group call arrives, the call is not sent to a delay announcement extension.

Centrex Transfer via Remote Call Forwarding

Centrex Transfer via Remote Call Forwarding can be used in all system modes of operation to send outside calls to a remote telephone number or another Centrex station. In this context, the term *outside calls* refers to calls from outside the communications system, which may originate at extensions in the Centrex system but not connected to the local MERLIN LEGEND Communications System.

An outside call that uses this feature is defined as a call that arrives on an analog Centrex loop-start line at the MERLIN LEGEND Communications System. It may arrive directly or be transferred without consultation or without transfer supervision (in the case of an automated attendant). The forwarding call to the outside number is made on the same line/trunk on which the call arrived, conserving system facilities. The following considerations and rules apply:

- Only outside Centrex calls are forwarded using this feature.
- The system must be equipped with analog loop-start Centrex lines and *all* loop-start lines in the system must be Centrex facilities. Loop-start lines do not have to provide reliable disconnect for use by the Centrex Transfer via Remote Call Forwarding feature.
- To transfer calls outside the Centrex system, the organization must subscribe to a Centrex trunk-to-trunk transfer feature.

Activating Centrex Transfer via Remote Call Forwarding is just like activating regular Remote Call Forwarding and requires that Remote Call Forwarding be enabled for the extension. However, the user dials ∗ instead of a dial-out code, and a Pause character may be required after the ∗. The Centrex service provider determines whether the Pause is needed.

Pause cannot be originated from a single-line telephone or a remote access user. A multiline telephone user in the local system must enter an authorization code to activate the feature.

A remote access user may activate the feature without using an authorization code. Barrier code requirements do apply, however.

Authorization Codes and Remote Call Forwarding

In Release 6.0 and later Key or Hybrid/PBX mode systems, forwarding features, including Centrex Transfer via Remote Call Forwarding, but excluding Follow Me, can be activated or deactivated at a multiline telephone by entering the authorization code for the extension from which calls are to be forwarded. The user enters the authorization code, then activates or deactivates the forwarding feature in the normal fashion. This is especially useful for a single-line telephone user who must include a Pause character in a Centrex Transfer via Remote Call Forwarding dialing sequence, because the character cannot be dialed at a single-line telephone. It is also useful when activating Call Forwarding or Remote Call Forwarding at phantom stations, or via remote access (e.g. from another switch in the private network). No other features can be used by entering an authorization code in this fashion.

Release 5.0 Enhancements (June, 1997)

Release 5.0 includes all Release 4.2 functionality, plus the enhancements listed below.

Computer Telephony Integration (CTI)

A PassageWay Telephony Services CTI link from the MERLIN LEGEND Communications System to a LAN server running Novell® NetWare® software allows Lucent Technologies-certified telephony applications to control and monitor MLX and analog multiline telephone (BIS only) operations. The physical connection for the CTI link is an MLX port on a 008 MLX or 408 MLX module on the MERLIN LEGEND Communications System control unit and ISDN link interface card plugged into the customer's server. The feature is available for Hybrid/PBX mode systems only.

NOTES:

1. The NetWare server software version must be 3.12, 4.1 or 4.11.
2. The 008 MLX and 408 MLX modules must have firmware vintage other than 29. If the module has firmware 29, programming a CTI link on the module is prevented. An earlier or later vintage firmware is supported.

Basic Call Control

A CTI link application on a user's computer can assume basic call control of the user's analog multiline or MLX telephone's **SA** buttons. Basic call control includes:

- Answering calls arriving on an **SA** button
- Making calls from an **SA** button
- Hanging up calls
- Hold and retrieving a call on hold at the user's extension

NOTE:
Transfer and 3-way conference, when handled through a CTI link application, provide the original caller's calling number information or other information to the transfer receiver or new conference participant, if the user has screen-pop capability.

Screen Pop

Screen pop occurs when the calling number, called number, or other user-defined identifier (such as account code that a voice-response unit prompts the caller to dial) is used to display a screen associated with the far-end party. For example, Caller ID services can be used to support screen pop on a system that includes a CTI link; using the calling party number as a database key code, information about a caller automatically appears on the user's computer screen when the call arrives at the extension. Depending on the application, screen pop may be available for calls that arrive on line buttons other than **SA** buttons and/or calls that are answered manually at the telephone rather than by the application.

Screen pop can occur on incoming calls from the following sources:

- Calling group distribution
- ISDN PRI Routing by Dial Plan
- An extension on the MERLIN LEGEND Communications System
- Remote access

NOTE:
In the case of remote access calls, the only information that the application can collect about the caller is the remote telephone number.

- A transfer of a call that was answered by a voice response unit
- A transfer, redirection, or conference of a call that was answered at a DLC or at a QCC

NOTES:

1. DLCs (Direct-Line Consoles) may use CTI applications. If they do, they perform the same way as other extensions. A DLC assigned to use a CTI link application is a *monitored* DLC. When a DLC is used as a regular operator console and not using a CTI link extension, it is *non-monitored*.
2. Calls to a QCC or non-monitored DLC do not initiate screen pop at the operator position, but when an operator directs a call to an extension using a CTI application, caller information does initiate screen pop. If the DLC is non-monitored, screen pops can occur after the DLC releases the call.
3. Calls transferred from Cover buttons on non-monitored DLCs do not initiate screen pop at the destination extension.

HotLine Feature

The Release 5.0 HotLine feature is designed for retail sales, catalogue sales, and other types of businesses and organizations and is available in all three modes of system operation. It allows a system manager to program a single-line telephone extension connected to an 008 OPT, 012 T/R, or 016 T/R module as a HotLine. When a user lifts the handset at the HotLine extension, the telephone automatically dials the inside extension or outside telephone number programmed as the first Personal Speed Dial number (code #01) for the extension. The system does not permit calls to be transferred, put on hold, or conferenced. (A user can press the telephone's **Hold** button, if it has one, to put a call on local hold, but the call cannot be redirected in any way. Switchhook flashes are ignored.)

Personal Speed Dial codes can be programmed from the extension prior to HotLine assignment (a system programming function). Alternatively, a Personal Speed Dial code can be programmed from the single-line telephone after HotLine operation is assigned. However, because of security considerations, this is a one-time opportunity. Once the Personal Speed Dial number is programmed, any changes to it or any other extension programming must be performed using centralized telephone programming.

Any type of inside or outside line that is normally available to a single-line telephone can be assigned to a HotLine extension. Generally, the HotLine telephone does not receive calls, and its lines should be set to No Ring.

SECURITY ALERT:
If a HotLine extension accesses a loop-start line, that line should provide reliable disconnect and be programmed for reliable disconnect. Otherwise, a user at the extension may be able to stay on the line after a call is completed and then make a toll call.

Group Calling Enhancements

Release 5.0 and later systems include Group Calling features that enhance group calling operations.

Most Idle Hunt Type

In addition to the Circular (factory setting) and Linear hunt types supported in earlier releases, a third hunt type distributes calling group calls in an order based on which agent has waited the longest since transferring or hanging up on an incoming calling group call. For some applications, this hunt type is more efficient than the circular type because it takes into account the varying duration of calls. The system distributes calls based on when an agent last completed a call, not on when he or she last received one. This hunting method ignores non-calling group calls. For example, if an agent transfers a call that arrived on a line not assigned to the calling group, the calling group member's most-idle status is unaffected.

Delay Announcement Devices

The system manager can designate as many as ten primary delay announcement devices per group rather than the single device for each group that is available in Release 4.2 and earlier systems. Furthermore, an additional secondary delay announcement device can be specified, for a total of ten primary device extensions and one secondary device extension per group.

A primary delay announcement device operates in the same fashion as a single delay announcement device, playing once, as soon as it is available, for the caller who has waited the longest for a calling group agent and has not heard a primary delay announcement. If a secondary announcement device is used, it can use the factory setting, which plays the announcement once, or it can be set to repeat the announcement after a certain amount of time. The system manager programs the time (0–900 seconds) between announcements. This setting controls both the interval between primary and secondary announcements and the interval between repetitions of the secondary announcement if it is set to repeat. (See "Optional Group Features" on page 3–398 for guidelines on setting the delay.)

The primary and secondary announcement options, when used together, allow an initial message to play for callers, followed by a repeating announcement that, for example, urges callers to stay on the line and wait for a calling group member.

Two or more groups may share an announcement device.

A primary delay announcement device can be programmed as a secondary delay announcement device.

Enhanced Calls-in-Queue Alarm Thresholds

Three Calls-in-Queue Alarm thresholds can be set to more clearly indicate the real-time status of the calls waiting in the queue according to the behavior of programmed Calls-in-Queue Alarm buttons. In earlier releases, only one Calls-in-Queue Alarm Threshold setting is available to activate the LEDs at programmed Calls-in-Queue Alarm buttons for a calling group.

Using all three levels, the system manager sets Threshold 3 to the highest value, Threshold 2 to a middle value, and Threshold 1 to the lowest value. A Calls-in-Queue Alarm button indicates the severity of the alarm conditions in the following ways:

- If the number of waiting calls is less than the value programmed for Threshold 1 or drops below that level, the LED is unlit.
- If the number of waiting calls is greater than or equal to the Threshold 1 value but less than the Threshold 2 value, the LED flashes.
- If the number of waiting calls is greater than or equal to the Threshold 2 value but less than the value for Threshold 3, the LED winks.
- If the number of waiting calls is greater than or equal to the highest value, Threshold 3, the LED lights steadily.

NOTE:
A DSS (Direct Station Selector) button that is used as a Calls-in-Queue Alarm button can only indicate two threshold levels, either by flashing or by lighting steadily. If a calling group must use this type of Calls-in-Queue Alarm button, only two threshold levels should be programmed.

If all three thresholds are set to the same value, the result is one threshold only (steady) with LED state either off or on. If two values are the same, then the result is two alarm levels (flash, steady). The factory is setting is one call for all three thresholds with LED states of off, flash, and steady.

An external alert only signals when the number of calls in the queue meets or exceeds the programmed Threshold 3 value.

MLX-5 and MLX-5D Telephones

The MLX-5 nondisplay and MLX-5D display telephones are compatible with all system releases. The display telephone includes a 2-line by 24-character display, and both telephones come with 5 line buttons. In systems prior to Release 5.0, the MLX-5 and MLX-5D telephones are treated as MLX-10 and MLX-10D telephones respectively. As of Release 5.0, the system recognizes the MLX-5 and MLX-5D telephones as 5-button telephones.

If these telephones are connected to communications system releases prior to 5.0, they are recognized by the communications system as 10-button telephones.

Release 4.2 Enhancements (June, 1997)

Release 4.2 includes all Release 4.1 functionality, plus the enhancements listed below. There are no hardware changes for Release 4.2.

Additional Network Switch and Services Options for ISDN PRI

Release 4.2 of the system supports connectivity to MCI® or local exchange carrier (LEC) PRI services and to the following central office switch types (in addition to the 4ESS and 5ESS switch types that carry for AT&T Switched Network services):

- NORTEL® DMS™-100 BCS 36 for local exchange carrier services
- NORTEL DMS-250 generic MCI07 serving the MCI network
- Digital Switch Corporation DEX600E generic 500-39.30 serving the MCI network

The following MCI PRI and PRI local exchange carrier (LEC) services (along with AT&T Switched Network Services) can be provided to users of the MERLIN LEGEND Communications System:

- MCI Toll Services for DMS-250 or DEX600E switch type:
  - MCI Prism® service for domestic outgoing long-distance and international voice calls; for domestic outgoing 56-kbps restricted, 64-kbps unrestricted, and 64-kbps restricted circuit-switched data calls
  - MCI VNet® service for incoming and outgoing domestic and voice calls; for 56-kbps restricted, 64-kbps restricted, and 64-kbps unrestricted circuit-switched data calls
  - MCI 800 for domestic, toll-free, incoming voice calls
  - MCI 900 service numbers
- LEC services for DMS-100 switch types:
  - DMS Virtual Private Network service for calls between the MERLIN LEGEND Communications System and another communications system (such as another MERLIN LEGEND Communications System)
  - DMS INWATS (Inward Wide Area Telephone Service) for domestic toll-free incoming voice calls
  - DMS OUTWATS (Outward Wide Area Telephone Service) for domestic outgoing long-distance voice calls
  - DMS FX (foreign exchange) to provide local call rating for calls from the local exchange to the area serviced by the foreign exchange.
  - DMS tie trunk service to provide private exchange call rating for calls placed on a dedicated central office facility between the MERLIN LEGEND Communications System and another communications system (such as another MERLIN LEGEND Communications System)

Improvements to Station Message Detail Recording (SMDR) and Support for MERLIN LEGEND Reporter Application

The SMDR feature is enhanced to provide more details about calling group agent activities and to help system managers assess the effectiveness of call centers in terms of both agent performance and the adequacy of facilities to handle inbound calls. These improvements apply to calling groups that are programmed as Auto Login or Auto Logout type. The SMDR and MERLIN LEGEND Reporter features listed are programmable:

- **TALK Field.** For Auto Login and Auto Logout calling groups, the TALK field records the amount of time a calling group agent spends on a call.
- **DUR. (DURATION) Field.** For Auto Login and Auto Logout calling groups, call timing begins when a call arrives at MERLIN LEGEND Communications System and not after a preset number of seconds. Call timing ends when the call is disconnected; either the caller or the agent hangs up. This allows the system manager to determine how long a caller waited for an agent's attention.

- **Coding of Calls on Reports.** An asterisk (*) appears in the call record when:
  a. A call is not answered by an Auto Login or Auto Logout calling group agent and is abandoned while waiting for an agent.
  b. The call is answered by someone not a member of an Auto Login or Auto Logout calling group.

  An exclamation point (!) indicates an Auto Login or Auto Logout agent handled a call that was answered by someone who was not a member of that Auto Login or Auto Logout with Overflow group. An ampersand (&) in the call record indicates that the group's overflow receiver answered the call.

MERLIN LEGEND Reporter

MERLIN LEGEND Reporter provides basic call accounting system reports for all incoming calls to Auto Login or Auto Logout type calling groups. MERLIN LEGEND Reporter assists in determining the effectiveness of calling group agents, assessing the level of service provided to callers, and ascertaining whether adequate incoming phone lines and agents are available to handle peak-call load. MERLIN LEGEND Reporter is a programmable option. The factory setting is Off, in which case the Release 4.0 SMDR reports are available. If the option is set to On, the following new reports are provided:

- Organization Detail Report
- Organization Summary and Trends Report
- Selection Detail Report
- Account Code Report
- Traffic Report
- Extension Summary Report
- Data Report
- Talk and Queue Time Distribution Report
- Time of Day Report
- ICLID Call Distribution Report
- Facility Grade of Service Report

Maintenance Enhancements

Change to Permanent Error Alarm

Beginning with Release 4.2, the most recent permanent error alarm is not shown on the System Error Log menu screen but is available as an option from that screen. For details, refer to the Maintenance section of the technician guide, *Installation, Programming, and Maintenance.*

Enhanced Extension Information Report

Beginning with Release 4.2, the Extension Information Report includes the Extension Status (ESS) and supervisory mode of each extension.

Release 4.1 Enhancements (June, 1997)

Release 4.1 includes all Release 4.0 functionality, plus the enhancements listed below. There are no hardware changes in Release 4.1.

Coverage Timers Programmed for Individual Extensions

Beginning with Release 4.1, coverage timers, which control the duration of the delay before calls are sent to each level of coverage, are changed as follows:

- The Group Coverage Ring Delay (1–9 rings) is programmed on individual extensions and replaces the Coverage Delay Interval programmed systemwide in previous releases.
- The Primary Cover Ring Delay (1–6 rings) and Secondary Cover Ring Delay (1–6 rings), programmed on individual extensions, replace the Delay Ring Interval programmed systemwide in previous releases.

These enhancements allow the system manager to customize coverage call delivery to match individual extensions' call-handling requirements.

Night Service with Coverage Control

Beginning with Release 4.1, a system manager can enable the Night Service Coverage Control option to automatically control the status of telephones programmed with Coverage VMS (voice messaging system) Off buttons, according to Night Service status.

When Coverage Control is enabled and the MERLIN LEGEND Communications System is put into Night Service, all programmed Coverage VMS Off buttons are automatically turned off (LED is unlit) and all eligible outside calls are sent to the assigned voice messaging system calling group with normal ringing delay. When Night Service is deactivated during the day, all programmed Coverage VMS Off buttons are automatically turned on (LED is lit) and voice mail coverage is disabled for outside calls.

Users can override the Coverage VMS Off button status at any time by pressing the programmed Coverage VMS Off button to turn the LED on or off.

Night Service Group Line Assignment

Beginning with Release 4.1, a system manager can assign lines to Night Service groups to control handling of after-hours calls received on individual lines. This capability replaces the automatic assignment to Night Service groups of only those lines that ring on the Night Service operator console. An outside line must be assigned to a Night Service group to receive Night Service treatment.

With this enhancement, Night Service can be activated and deactivated on lines that do not appear on operator consoles (for example, personal lines), and lines appearing at operator positions can be excluded from Night Service.

Forward on Busy

Beginning with Release 4.1, the Forward, Follow Me, and Remote Call Forward features are enhanced to remove the requirement that a call be ringing at an extension before it can be forwarded. With the Forward on Busy enhancement, a call to an extension with no available **SA** (System Access) or **ICOM** (Intercom) buttons is forwarded immediately to the programmed destination, preventing the caller from hearing a busy signal from the intended call recipient's extension.

Maintenance Testing for BRI Facilities that Are Part of Multiline Hunt Groups (MLHGs)

Beginning with Release 4.1, the NI-1 BRI (National Integrated Services Digital Network-1 Basic Rate Interface) Provisioning Test Tool is enhanced to include testing for BRI facilities that are part of Multiline Hunt Groups (MLHGs).

The NI-1 BRI Provisioning Test Tool is used by Lucent Technologies maintenance personnel on MERLIN LEGEND Communications Systems that include a 800 NI-BRI module. Technicians use the tool during system installation and maintenance to test the functionality of the BRI lines and to report analyzed results.

Release 4.0 Enhancements (March, 1996)

Release 4.0 includes all Release 3.1 functionality plus the enhancements listed below:

Equipment

016 Tip/Ring Module

This module supports the 200-extension dial plan by providing 16 ports for tip/ring devices. Applications that use a tip/ring interface can connect to this board. All 16 ports can ring simultaneously. Four touch-tone receivers (TTRs) are included on the module as well. The module's ringing frequency (factory setting 20 Hz) can be changed through programming to 25 Hz for those locations that require it.

800 NI-BRI Module

This module connects NI-1 BRI trunks to the MERLIN LEGEND Communications System for high-speed data and video transmission.

System Features

Support for up to 200 Extensions

Release 4.0 has an expanded dial plan that supports up to 200 tip/ring devices.

Support for National ISDN BRI Service

This service provides a low-cost alternative to loop-start and ground-start trunks for voice and digital data connectivity to the Central Office. Each of the two B (bearer)-channels on a BRI line can carry one voice or one data call at any given time. The data speeds on a B-channel are up to 14.4 kbps for analog data and up to 64 kbps for digital data, which is necessary for videoconferencing and other video applications. Release 4.0 supports the IOC Package “S” (basic call handling) service configuration and Multiline Hunt service configuration on designated CO switches.

Support for 2B Data Applications

Release 4.0 has certified group and desktop video applications that use two B-channels to make video/data calls from endpoints (extensions) that are enabled to use 2B Data. The endpoints that support these applications connect to an MLX-port on the MERLIN LEGEND Communications System. 2B Data applications can make use of the NI-1 BRI, PRI, or T1 Switched 56 network interfaces to make outside connections using one or two data channels at a time.

Support for T1 Digital Data Transmission

Release 4.0 expands its T1 functionality by providing access to digital data over the public switched 56 kbps network in addition to data Tie-Trunk services. Users who have T1 facilities for voice services can now use them for video calls at data rates of 56 kbps per channel (112 kbps for video calls using two channels). The Release 4.0 T1 offering also includes point-to-point connectivity over T1 Tie-trunks, allowing customers to connect two MERLIN LEGEND Communications Systems or a MERLIN LEGEND Communications System with a DEFINITY Communications System. The two communications systems can be co-located or off-premises.

Downloadable Firmware for 016 T/R Board and NI-BRI Board

The Personal Computer Memory Card International Association (PCMCIA) technology introduced in Release 3.0 continues to support these two new boards in Release 4.0 for installation and upgrade. A Release 3.0 or later processor is required for PCMCIA technology.

User Features

Delayed Call Forwarding

Each user can program a Forwarding Delay setting for the Forward, Remote Call Forwarding, or Follow Me features. The forwarding delay is the number of times that a call rings at the forwarding extension before the call is sent to the receiver. During the delay period, the user can screen calls by checking the displayed calling number (if it is available). The delay can be set at 0 to 9 rings. The factory setting for Forwarding Delay is 0 rings (no delay).

Voice Announce on the QCC

The QCC operator can enable the fifth **Call** Button to announce a call on another user's speakerphone if the destination telephone has a Voice Announce capable SA button available. A QCC cannot receive Voice Announce calls; they are received as ringing calls. The factory-set status for the fifth Call Button is to have Voice Announce disabled.

Time-Based Option for Calling Group Overflow

Release 4.0 has added a *time limit* for calls in queue in addition to the previous number limit. If the Overflow Threshold Time is set to a valid number between 1–900 seconds, calls that remain in the Calling Group Queue for the set time are sent to the Overflow Receiver. If the Overflow Threshold Time is set to 0, Overflow by time is turned off. The factory-set time limit is 0 seconds (Overflow by time off).

Single-Line Telephone Enhancements

- **Disable Transfer.** Through centralized telephone programming, the system manager can disable the ability to transfer calls by removing from the telephone all but one **SA** or **ICOM** button.
- **No Transfer Return.** When a handset bounce in its cradle, the MERLIN LEGEND Communications System interprets this as a switchhook flash and attempts to transfer a call. When the transfer attempt period expires, the user's telephone rings. Release 4.0 eliminates this unintended ringing by disconnecting the call in situations where a switchhook flash is followed by an on-hook state when dial tone is present.
- **Forward Disconnect.** All ports on 012 T/R and 016 T/R modules now send forward disconnect to all devices connected to them when forward disconnect is received from the CO. This enhancement prevents the trunk/line form being kept active when one end disconnects from the call. If an answering machine is connected to the port, it will not record silence, or busy tones, or other useless messages. This is a non-programmable operation.

Security Features

7-Digit Password for SPM

Release 4.0 has increased system security by requiring a seven-digit password when using SPM to perform remote administration or when performing the Trunk Test procedure. This password is to be used in addition to the Remote Access barrier codes.

Release 3.1 Enhancements (March, 1996)

Release 3.1 includes all Release 3.0 functionality plus the enhancements listed below.

Security Features

New security features include a variety of components. Additional details are included elsewhere in this book.

Call Restriction Checking for Star Codes

The system manager can add star (*) codes to Allowed and Disallowed Lists to help prevent toll fraud. Star codes, typically dialed before an outgoing call, enable telephone users to obtain special services provided by the central office (CO). For example, in many areas, a telephone user can dial *67 before a telephone number to disable central office-supplied caller identification at the receiving party's telephone. (You must contract with your telephone service provider to have these codes activated.)

When users dial star codes, the MERLIN LEGEND Communications System's Calling Restrictions determine whether the codes are allowed. If allowed, the system's Calling Restrictions are reset, and the remaining digits that the users dial are checked against the Calling Restrictions.

Trunk-to-Trunk Transfer for Each Extension

This enhancement to the trunk-to-trunk feature enables the system manager to allow or disallow trunk-to-trunk transfer *on a per-extension basis.* Beginning with Release 3.1, the factory setting for all extensions is restricted.

Programmable Second Dial Tone Timer

The system manager can assign a second dial tone timer to lines and trunks to help prevent toll fraud (for example, when star codes are used). After receiving certain digits dialed by a user, the CO may provide a second dial tone, prompting the user to enter more digits. If this second dial tone is delayed, and the user dials digits before the CO provides the second dial tone, there is a risk of toll fraud or the call being misrouted. The second dial tone timer enables the system manager to make sure that the CO is ready to receive more digits from the caller.

Disallowed List Including Numbers Often Used for Toll Fraud

Disallowed List #7 contains default entries, which are numbers frequently associated with toll fraud. The factory setting is for Disallowed List #7 to be assigned to both generic and integrated VMI ports used by voice messaging systems. The system manager must manually assign this list to other ports.

Pool Dial-Out Code Restriction by Default

The factory setting for the Pool Dial-Out Code restriction has changed to restricted. No extension or remote access user with a barrier code has access to pools until the restriction is removed by the system manager.

Outward Restrictions for VMI Ports by Default

Ports assigned for use by voice messaging systems (generic or integrated VMI ports) are now assigned outward restrictions by default. If a voice messaging system should be allowed to call out (for example, to send calls to a user's home office), the system manager must remove these restrictions.

SECURITY ALERT:
Before removing restrictions, it is strongly recommended that you read Appendix A, "Customer Support Information."

Factory Setting Facility Restriction Level (FRL) for VMI ports

The factory setting FRL for VMI ports has changed to 0, restricting all outcalling.

Factory Setting FRL for the Default Local Route Table

The factory setting FRL has changed to 2 for the Default Local Route Table. Now, system managers can easily change an extension factory setting of 3 to 2 or lower in order to restrict calling. No adjustment to the route FRL is required.

Maintenance Procedure Password for Testing Outgoing Trunk Problems

A password is now required for technicians to perform trunk tests.

SECURITY ALERT:
The enhancements in Release 3.1 help increase the security of the MERLIN LEGEND Communications System. To fully utilize these security enhancements, be sure to read and understand the information in these upgrade notes.

Release 3.0 Enhancements (August, 1994)

Release 3.0 includes all Release 2.1 functionality plus the enhancements listed below.

Equipment

New hardware includes a variety of components. Additional details are included elsewhere in this book.

- CPU modifications include:
  - A processor running at 16 MHz with a 32-bit wide data bus
  - 1.5 Mbytes of non-volatile (battery-backed) RAM
  - 4.0 Mbytes of Flash ROM
  - PCMCIA memory card interface
  - A full-duplex 1200/2400 bps modem
  - Error/Status code display for maintenance support
- An 800 GS/LS-ID line/trunk module delivers the calling party's telephone number to the customer premises (MLX display telephones only) if the service is subscribed to by the customer and if it is supported by the caller's telephone company.
- Support for:
  - MDC 9000 (six-line, cordless)
  - MDW 9000 (six-line, cordless, wireless)
  - 8101 (single-line telephone, desk or wall-mount, data/fax jack, selectable positive disconnect)
  - 2500YMGL and 2500 MMGL (single-line desk telephones, selectable positive disconnect)
  - Picasso™ Still-Image telephone (for interactive display of still images)
  - Videophone 2500 single-line phone with interactive video display
- Pre-fabricated and pre-drilled backboard

Installation, Upgrade Administration, and Maintenance

These are the new MERLIN LEGEND Communications System capabilities:

- SPM (Release 3.18) conversion of translations from Release 1.0, 1.1, 2.0, and 2.1 to 3.0
- Remote operation at 1200/2400bps

- Advice and feedback administration screens for new Release 3.0 functionality
- PCMCIA Memory Card Interface (a Release 3.0 processor board required) allowing:
  - System software installation
  - System software upgrade
  - 800 GS/LS-ID port module firmware upgrade
  - Integrated backup and restore of translations
  - Automatic and manual options for backup and restore are available on the system. Automatic backup can be scheduled weekly or daily to fit the customer's needs.
- Inter-digit dialing timer values are programmable
- Inspection of Lines/Trunks displays only those lines and trunks configured on system rather than all 80 facilities
- Extensions and facilities in Maintenance Busy (both manual and automatic) can be identified by the maintenance monitor

User Features

Security

The Remote Access feature allows people at remote locations to enter the system by dialing the number of a line or trunk designated for remote access. The system can be programmed to require the remote user to dial a barrier code (a type of password) after reaching the system. In earlier versions, the systemwide barrier code length is fixed at four digits. Release 3.0 allows a systemwide barrier code length ranging from a minimum of four digits to a maximum of 11 digits, with a factory setting of seven digits. SMDR records are enhanced to provide information for remote access calls. If the remote access call is received on a facility providing Caller ID information (see below), the SMDR report can help trace the call.

Caller ID

Caller information (telephone number) is furnished to MLX display telephones by an 800 GS/LS-ID module using the LS (loop-start) option. This allows customers to screen calls before answering the phone, as well as providing calling party information for use with various applications. This function is available only when the customer subscribes to caller identification service from the telephone company, if the telephone company supports that service.

Shared System Access (SSA)

A telephone may have up to 27 **Shared SA** buttons to expand extension coverage.

Authorization Codes

The Authorization Code feature allows you to make calls using your calling privileges when you are dialing from an extension other than your own. When you enter your authorization code (ranging from 2 to 11 characters and unique across the system), the privileges and restrictions assigned to your home extension override the current restrictions at the host extension. This includes toll restriction, outward restriction, Facility Restriction Level (FRL), Allowed Lists, Disallowed Lists, Night Service Exclusion List, and Dial Access to Pools. All other functions on the telephone are those of the local telephone, not the home extension.

Authorization codes can also be used for the purpose of call accounting through the SMDR printout. The SMDR account code field can hold either the authorization code extension number or the authorization code itself.

Direct Voice Mail

If your company has voice mail, this feature allows you to dial a co-worker's voice mailbox directly without ringing that person's extension. Direct Voice Mail is especially useful for transferring calls when a co-worker is not available.

Additional Features

The status of Leave Word Calling (LWC) and Privacy are retained across cold starts.

Caller ID (CLASS℠ ICLID and PRI) are available on primary coverage and return from transfer.

Additional Application Packages, Adjuncts, and Adapter Enhancements

PassageWay Direct Connection Solution

PassageWay Direct Connection Solution (Release 2.0) is a computer telephony integrated product that links a desktop Microsoft® Windows®-based PC to the MERLIN LEGEND Communication System's MLX-10DP, MLX-20L, or MLX-28D telephone. The Windows applications are: AT&T Call (autodial/contact manager), AT&T Buzz (screen-pop applications), AT&T Set (extension programming interface), and Log Viewer (call log application). PassageWay Direct Connection Solution (Release 2.0) is the version supported on MERLIN LEGEND Communications System Release 3.0.

PagePal™

PagePal connects several paging systems to the MERLIN LEGEND Communications System. No other system adapter is necessary for loudspeaker paging.

Fax Attendant 2.1.1

Fax Attendant Release 2.1.1., which co-resides with AUDIX Voice Power on the IS III Release 1.2 platform, provides the same functionality as earlier versions, plus the following enhancements:

- **Personal Fax Messaging.** Inbound faxes can be stored until the subscriber asks that they be printed, at any fax machine he or she specifies, on company premises or offsite (when the subscriber retrieves fax messages remotely).
- **Fax Mail.** Allows subscribers to send fax messages, get fax messages, record personal greetings, and program outcalling.
- **Fax Broadcast.** Provides a simple way to send one fax to as many as 1000 fax numbers.

Call Accounting System (CAS) for Windows

This standalone version of CAS takes advantage of the easy-to-use graphical environment offered by Microsoft Windows. Through data communications, it also allows one CAS system to serve multiple business sites.

Group Videoconferencing

Group videoconferencing is supported over DS1 (Digital Signal Level 1) facilities with PRI. (Videoconferencing has been available since Release 2.0.)

Release 2.1 Enhancements (August, 1994)

Refer to *Release 2.1 Notes* for detailed descriptions of Release 2.1 enhancements. Release 2.1 includes all Release 2.0 functionality plus the enhancements listed below.

Operational

System operational enhancements include the following:

- When a call is forwarded to a multiline telephone that has an Auto Dial or DSS button programmed for the forwarding telephone, the green light next to the Auto Dial or DSS button for the forwarding telephone does not flash.
- People answering calls received on **Cover** buttons are allowed to generate touch tones if their telephones are not outward- or toll-restricted.
- Calls received on personal lines with Do Not Disturb on go immediately to coverage instead of waiting for the coverage delay interval.
- A call put on hold at a **Cover** button can be added to a conference by someone who has a personal line for the call.
- A call put on hold at a **Cover** button can be picked up by any person who has a personal line for the call.

- Calls that have been put on hold at a **Cover, SA, Shared SA,** or **Pool** button can be picked up by a person who has a personal line button for the call.
- An inside call on hold at an **SA** button can be picked up and transferred by any person with a **Shared SA** button corresponding to the button with the held call.
- Calls that are on hold awaiting transfer can be picked up by any user who has a personal line for the call.
- Beginning with Integrated Solution III Version 1.2, the automatic reconciliation program that was run automatically at 3:00 a.m. is disabled and can be invoked manually from the User Maintenance menu.
- If an extension is programmed for Forced Account Code Entry, account codes do not have to be entered when using a programmed Loudspeaker Paging button. In addition, an SMDR record is not generated for calls made to paging ports.
- When an MLX telephone, other than an MLX-20L, is plugged into an MLX port and the Personal Directory does not contain any entries, the allocation of the Personal Directory resource is released. If there are any entries in the Personal Directory, the Personal Directory allocation and the entries in the Personal Directory are saved in the MLX port.
- SMDR call records for calls made on PRI facilities are more accurate than SMDR call records for calls made on non-PRI facilities. Outgoing calls made on PRI facilities receive “answer supervision.” Consequently, SMDR timing for calls made on PRI facilities begins when the call is answered. Timing for calls made on non-PRI facilities begins when dialing is completed. Therefore, an SMDR call record is not generated when a call made on a PRI facility is not answered at the far end.
- The Call Type field and the Called Number field on the SMDR report are changed for both the Basic and ISDN report formats.
- An 012 port that is programmed as a *generic* voice messaging interface (VMI) port can transfer an outside call to an outside number.
- In a system where the transfer audible option is programmed for Music On Hold and a music source is provided, outside callers who are transferred to a calling group and are waiting in the queue or who are parked or camped-on, hear music while they are waiting. Internal callers never hear music on hold while waiting in the calling group queue or when they are parked, camped-on, or being transferred to another extension.

Installation and Hardware

Installation and hardware enhancements include the following:

- The control unit covers for the MERLIN LEGEND Communications System are the same easy-to-use covers as those for the MERLIN II Communications System.
- A new 012 (tip/ring) module [apparatus code 517G13 (28) or higher letter] contains a built-in ring generator. The maximum ring equivalency number (REN) supported is 2.2, and the module will ring four ports at one time. Bridging of single-line telephones is not supported because of poor transmission quality.
- A new 008 OPT module (labeled “with RING GEN.”) contains a built-in ring generator. It rings four ports at a time.
- Ferrite cores for the power supply modules are shipped from the factory to comply with FCC Part 15 requirements.
- 3129-WTWA (touch tone outdoor telephone equipped with cast aluminum housing and armored handset cord with bell ringers)
- 3129-WRWA (rotary dial outdoor telephone equipped with cast aluminum housing and armored handset cord with bell ringers)
- 3129-WAWA (auto dial outdoor telephone equipped with cast aluminum housing and armored handset cord with bell ringers)
- 3129-WNWA (nondial, automatic ringing on dedicated circuit outdoor telephone equipped with cast aluminum housing and armored handset cord with bell ringers)

Equipment and Operations

Equipment and operations enhancements include the following:

- A new release (Version 2.16) of the System Programming and Maintenance (SPM) software to support international use.
- Support of PRI connection to DEFINITY® Communications Systems
- MLX-10DP telephone, identical to an MLX-10D, except that it provides a jack for access to the PassageWay™ Solution and PassageWay Direct Connection Solution application.

Additional Application Packages, Telephones, Adjuncts, and Adapter

Additional application packages, adjuncts, and adapter enhancements include the following:

- A Digital Announcer Unit, compatible with all call management systems and tip/ring applications currently available for the MERLIN LEGEND Communications System.
- The HackerTracker™ system software enhancement to the Call Accounting System (CAS) detects abnormal calling activity by allowing monitoring of facilities or authorization code usage.
- A new digital Magic on Hold unit is available in three configurations:
  - Basic Prerecorded Package
  - Personalized Package
  - Custom Production Package
- The MERLIN® Identifier application enables people to receive, store, and use information provided by the local telephone company, specifically, the telephone number of a caller in an area where the service is also supported.
- An Off-Premises Range Extender (OPRE) supports off-premises operation with an off-premises extension capability and extended range operation for tip/ring devices as well as variable gain to improve voice transmission levels.
- PagePac® Plus Loudspeaker Paging Systems do not require system adapters. The controller provides eight built-in zones (expandable to 56 zones by using up to three 16-zone expansion units), group zones, talkback, night bell, operator override, tones, door supervision, microphone input, and system access security codes as standard features.
- PassageWay Solution (Release 1.0) software consisting of four applications that run with Microsoft® Windows™ 3.1 or later and provide an interface between an IBM®-compatible personal computer and the MERLIN LEGEND Communications System.
- Four single-line telephones with memory buttons: 710, 715, 725, and 730.
- Four specialty handsets compatible with all MLX telephones and the 3101 series, 3178-NHL, 8102, and 8110 single-line telephones.

Release 2.0 Enhancements (October, 1992)

Refer to *Release 2.0 Notes* for detailed descriptions of Release 2.0 enhancements. Release 2.0 includes all Release 1.1 functionality plus the enhancements listed below.

Programming

Programming enhancements include the following:

- Extension Copy is a feature that reduces programming time by allowing the use of any extension as a template for programming another extension or block of extensions through centralized telephone programming.
- Integrated Administration provides a single interface through Integrated Solution III (IS III) for programming entries common to the MERLIN LEGEND Communications System and AUDIX™ Voice Power.
- Any SPM Version 2.xx (where xx is replaced by numbers) provides a Convert function for use in upgrading the system from Release 1.0 or 1.1. This function converts a backup file from a Release 1.0 or 1.1 system to Release 2.0 and later format, allowing reuse of existing system programming on the upgraded system.
- Forced idle reductions keep system interruptions at a minimum. In general, the smallest necessary component is forced idle during programming activities. For example, renumbering a single extension idles only one extension. Only a few systemwide programming activities, such as setting the system mode and system renumbering, idle the entire system.

Operational

System operational enhancements include the following:

- Coverage VMS Off is a feature that prevents incoming outside calls from going to voice mail. (All other coverage remains active as programmed.) The feature is programmed extension by extension, either through extension programming or through centralized telephone programming.
- A Night Service group can be programmed to include either extensions or a calling group as members. However, you should not program both individual extensions and a calling group into the Night Service group, because individuals will not have a chance to answer before calling group members do.
- When AUDIX Voice Power sends a Leave Message notification to an extension, the system identifies the voice mail system as the sender of the message. When the voice mail subscriber uses the Return Call feature, the call goes to any available voice mail port, not just to the specific port that generated the message. This reduces the chance of getting a busy port.

- Coverage receivers can call coverage senders and have the call receive coverage treatment. If a receiver calls a sender for whom he or she is covering, and the sender is busy or unavailable, the call proceeds to other points of coverage. It does not come back to the receiver who originated the call.
- Enhancements to display prompts include automatic posting of a `Do Not Disturb` message (for MLX display telephones or other multiline telephones, a Posted Message button must be programmed for the `Do Not Disturb` message to be posted automatically) when a user activates the Do Not Disturb feature, and confirmation messages when a user activates Hold, Privacy, Saved Number Dial, and Transfer.
- Direct Inward Dialing (DID) trunk emulation on a T1 facility provides up to 24 DID channels on a single DS1 interface, instead of requiring 24 separate physical trunks.
- A telephone user can send a timed flash (switchhook flash) on a loop-start trunk call on a System Access (**SA**) button.

Fax Attendant System™

Fax Attendant is an application for sending and receiving fax messages; its interface is similar to the voice mail interface provided by AUDIX Voice Power. Fax Attendant System, which co-resides with AUDIX Voice Power on the IS III platform, provides the following services:

- **Fax Call Coverage.** Receives and holds messages for subscribers whose fax machines are busy or out of paper. This service also allows a subscriber to have a personal fax number without having a fax machine.
- **Fax Mail.** Allows subscribers to create and use fax distribution lists, send and receive fax messages, and record personal greetings for incoming fax calls.
- **Fax Response.** Prompts callers to select and receive faxes from a customer-created menu of choices, using touch-tone responses.

408 GS/LS-MLX Module

The 408 GS/LS-MLX module (Releases 2.0 and higher only) combines four line/trunk jacks for ground-start or loop-start trunks and eight extension jacks for MLX telephones on a single module in the control unit.

Primary Rate Interface (PRI)

Primary Rate Interface (PRI) enhancements include the following:

- Connectivity to the 5ESS® Generic 6
- Multiple incoming calls to directory number
- Call-by-Call Service Selection
- Password handling for FTS2000
- Extension ID as Calling Party Number for Automatic Number ID (ANI)

Maintenance

Maintenance enhancements include the following:

- Clear descriptions of module test failures
- Optional printing of hard copy of error logs
- Display that correlates extension numbers with slot/port and logical ID
- Display showing which slots, trunks, and extensions are maintenance busy
- Internal digital switching element (DSE) loopback test for all modules
- B-channel loopback test for MLX modules
- B-channel line or call service states display
- Error log entries for dual-port RAM errors

Release 1.1 Enhancements (October, 1992)

Refer to *Release 1.1 Notes* for detailed descriptions of Release 1.1 enhancements. Release 1.1 includes all Release 1.0 functionality plus the enhancements described in the following sections.

Language Selection

This selection allows you to program the system for the display of prompts, menus, and messages on MLX display telephones in English, French, or Spanish. You can also program the following options in any of these languages, independently of the system language:

- Individual extensions with MLX telephones
- System Programming and Maintenance (SPM)
- System programming reports
- SMDR report headers

MLX-10D, MLX-20L, and MLX-28D display telephones and MLX-10 nondisplay telephones are available in three separate versions, with factory-set buttons in English, Spanish, or French. (The MLX-10DP is available in the English version only.) In addition, user and operator guides and telephone tray cards are available in all three languages.

Programming and Maintenance

Programming and maintenance enhancements include the following:

- Additional Inspect capability in system programming
- Editing capability (Backspace selection) in extension programming
- Improvements to system reports
- An access log that records the last 20 times maintenance or system programming has been accessed
- Longer (20-second) gap between ring cycles for programming mode and Forced Idle tone

Operational

System operational enhancements include the following:

- Automatic selection of an **SA** button when Conference is invoked (Hybrid/PBX mode)
- Prompting through Conference feature on MLX display telephones
- Relocation of the **More** prompt on the MLX-20L display
- Display of the number saved on a programmed Last Number Dial or Saved Number Dial button when the button is inspected

SPM

SPM enhancements include operation in English, French, or Spanish, faster backup and restore, and automatic on-screen display of reports as they are created, with a Browse capability for reading the reports.

Equipment

Additional equipment includes the 8102 and 8110 analog telephones, four headsets, two headset amplifiers, and a transparent protective cover for the MLX-10 and MLX-10D telephones. The 8102 and 8110 telephones are also compatible with Release 1.0.

PF Registration

PF registration number AS5USA-65646-PF-E is assigned by the FCC for operating the MERLIN LEGEND Communications System in Hybrid/PBX mode in the United States. (The PF registration is also applicable to Release 1.0 systems.)

Programming with SPM

2

The System Programming and Maintenance (SPM) software package offers an alternate method of programming the MERLIN LEGEND Communications System using a PC. This method frees the system programming console for other uses and also provides the additional functions listed below:

- Backing up system programming information
- Restoring system programming information from a backup
- Converting system programming information from one release to another (part of the upgrade procedure)
- Printing, viewing, and storing reports
- Programming the communications system remotely
- Programming in surrogate mode

SPM software is available in DOS (which can run as a DOS application or can be installed to run with Windows 95) or UNIX (as part of Intuity Integrated Solution II*, or Integrated Solution III*). A Windows version of SPM (MERLIN LEGEND Communications System Win SPM) is also available.

NOTE:
DOS SPM and Win SPM software can be used directly from the floppy disk or CD-ROM on your PC. However, if your PC has a hard disk, you should install SPM onto the hard disk.

* No longer orderable.

This book describes the use of SPM on a PC with a DOS operating system only. If you are using Win SPM, refer to the documentation that was provided with the Win SPM application for information. If your system includes the Intuity or IS II/III applications, you have the UNIX System version of SPM.

For information about accessing SPM from the IS II/III application, refer to the following books:

- Integrated Solution III System Manager's Guide, order no. 555-601-010
- Integrated Solution III Installation and Maintenance Guide, order no. 555-601-011
- Integrated Solution II System Manager's Guide, order no. 555-600-726
- Integrated Solution II Installation and Maintenance Guide, order no. 555-600-720

System Requirements

To use SPM for system programming, you need the SPM diskette and an approved PC with version 3.3 (or later) of MS-DOS®. At a minimum, your PC should support and include the following items:

- At least 640 kbytes of RAM
- A floppy disk drive to accommodate the SPM disk (3.5-inch or 5.25-inch)
- A monochrome or color monitor
- A serial port that can use either a DB-9 or DB-25 connector

  NOTE:
  For a DB-9 connector, use a 9-pin to 25-pin adapter to attach the 25-pin connector of the RS-232 interface cable.

- An RS-232 interface cable of appropriate length for your site connection(s)

Depending on how you connect the PC to the control unit, you also need the following items:

- Direct local connection, if the PC is within 50 ft. of the control unit:
  - Either a 355AF modular adapter (if there is a male connector on the interface cable) or a 355A modular adapter (if there is a female connector on the interface cable)
  - A four-pair modular cord (D8W)

- Direct local connection, if the PC is more than 50 ft. from the control unit:
  - 355AF adapter
  - EIA crossover cable
  - Two Z3A2 Asynchronous Data Units (ADUs)
  - ADU crossover cable
  - 400B2 power adapter
  - 2012D transformer
  - BR1A-4P adapter and either a 102 connecting block or 103 connecting block
  - 248B adapter
  - Eight-position wall jacks
  - Four-pair plug-ended cable
  - D8W cords
  - D6AP power cord
  - EIA-232-D cables
- Modem (local or remote) connection:
  - A modem that supports 1200- or 2400-bps connections
  - Modem cable

In addition, a parallel printer is useful for reports. The PC needs a parallel port for the connection.

NOTE:
SPM uses Interrupt 4 and I/O address 3F8 for COM1. It uses Interrupt 3 and I/O address 2F8 for COM2.

Installing the SPM Software

Before you install or run SPM, it is recommended that you use `diskcopy` on a DOS PC (see your operating system guide) to make a backup copy of the SPM disk and store the original in a safe place. Use the backup copy to run the installation program.

For installing DOS SPM on a PC, follow the appropriate instructions in the next section of this book. For installing DOS SPM on a Windows 95 PC, follow the instructions provided in "DOS Installation with Windows 95" on page 2–6.

NOTE:
If your PC does not have a hard disk, you do not need to run the installation program. Go to "Initializing the SPM Software" on page 2–9.

DOS Installation

Use the following procedure to install SPM on the hard drive of a DOS PC.

NOTE:
If you are updating SPM, you do not need to remove the current SPM files. The new files will overwrite your current SPM files.

Considerations

Review the following items before you begin the installation procedure.

The installation program automatically performs the following:

- Checks available space on the hard disk. If space is insufficient, the installation is terminated and an error message is generated.
- Checks the autoexec.bat and config.sys files. If either file is write-protected, the installation is terminated and an error message is generated. SPM must make changes to these files.
- Saves a copy of autoexec.bat as autoexec.old
- Saves a copy of config.sys as config.old
- If autoexec.bat has not already been configured for SPM, performs the following:
  - Adds `c:\spm` to the path statement
  - Adds the line `SET AMS PATH=C:`
  - Adds the background print command
    `PRINT /D:PRN /B:4096 /U:3 /M:200 /S:1 >NUL`
- Adds the following line to config.sys if it is not already present
  `DEVICE=C:\ANSI.SYS`
- Copies the ansi.sys file from the floppy disk to c:\
- Creates the directory c:\spm
- Copies the following files from the floppy disk into the c:\spm directory:
  - spm.exe
  - ams_hlp.eng (English language help file)
  - ams_hlp.fre (French language help file)
  - ams_hlp.spa (Spanish language help file)

- Creates the following directories if they do not already exist:
  - c:\spm\backup
  - c:\spm\reports
  - c:\spm\tmp
- Does one of the following:
  - Creates the SPM configuration file c:\spm\ams.cfg, if it does not already exist. In this case, the ams.cfg file consists of only one line, in which the language attribute is specified: `LANG 1` if you specified English or did not specify a language with the `install` command;
  - Modifies the ams.cfg file, if it already exists, by adding or changing the LANG value.

Follow the steps below to install SPM on the PC's hard disk.

▶ **1. Switch to Drive A, if it is not already the current drive.**

`A:>` appears on the screen.

▶ **2. Insert the backup copy of the SPM disk into Drive A.**

▶ **3. Type one of the commands shown below and press Enter↵.**

- *install*
- *install french*
- *install spanish*

Because English is the default language, *install* and *install english* have the same result. If you do use the language argument (*english*, *french*, or *spanish*), you must type it in lowercase letters as shown. The command *install* may be uppercase or lowercase.

▶ **4. Wait for the message shown below to appear.**

```
SPM HARD DISK INSTALLATION PROGRAM
Strike a key when ready
```

▶ **5. Press any key to begin the installation.**

When the installation is finished, the following message appears:

```
SPM HARD DISK INSTALLATION IS NOW COMPLETE
YOU MUST REBOOT YOUR SYSTEM BEFORE USING SPM
```

▶ **6. Remove the SPM disk from Drive A and reboot your system.**

The installation procedure is complete.
Go to "Initializing the SPM Software" on page 2–9.

DOS Installation with Windows 95

Using DOS SPM with Windows 95 improves the interaction of SPM with the operating system compared to a Windows 3.x installation. For example, the interaction with the print driver is improved. If an online printer is not available when you try to print while using SPM, you see a message box explaining the problem. You can correct the problem by bringing the printer online and continuing, or you can cancel the print operation. SPM operation is not affected by the error message or the action you take to correct the problem.

NOTE:
This procedure is for installing the DOS version of SPM to run with Windows 95. Do not use this procedure if you have the Win SPM application. For Win SPM, refer to the documentation that was provided with the application.

Use the following procedure to install SPM. You do not need to remove the current SPM files. The new files automatically overwrite your current SPM files.

Considerations

Review the following items before you begin the installation procedure.

The installation program automatically performs the following:

- If you typed *install* (the command for DOS installation) instead of *install95*, checks if your PC has Windows 95 installed. If Windows 95 is detected, you see an error message that tells you to run the *Install95* program.
- Creates the directory c:\spm if it does not already exist
- Checks if the print.exe file is present in any directory listed in the PATH environment variable
- Runs the DOS SETVER command to set the version table for print.exe to 6.22. This is required to enable print.exe to run on Windows 95.
- Creates an spm.bat file in the directory c:\spm. The spm.bat file contains the ams_path and print statements required to run SPM.
- Unzips and copies the remaining files into the directory c:\spm
- Instructs you to refer to this document for details on using the PIF Editor to configure an SPM PIF file to work with the spm.exe file

Installation

With Windows 95 running on your PC, follow these steps to install SPM on the PC's hard disk:

▶ **1. Insert the SPM installation disk in any floppy disk drive (usually the A drive).**

▶ **2. Choose *one* of the following two methods to install SPM:**

Method 1 – Install DOS SPM with French, Spanish, or English Language:

1. Open a DOS Window from Windows Explorer.
2. At the DOS prompt, switch to the drive with the SPM installation disk (usually the A drive).
3. At the DOS prompt, type one of the commands shown below and press Enter↵.
   - *install95* or *install95 english*
   - *install95 french*
   - *install95 spanish*

NOTE:
Because English is the factory-set language, *install95* and *install95 english* have the same result. If you do use the language argument (*english*, *french*, or *spanish*), you must type it in lowercase letters as shown. The command *install95* may be in uppercase or lowercase letters.

Method 2 – Install DOS SPM with French, Spanish, or English Language:

1. From the Windows Explorer, select the floppy drive that contains the backup copy of the SPM disk.
2. Select and run Install95 (either by double-clicking on the file name or single-clicking on the file name and using the menu choice **File:Open**).

▶ **3. After you start the DOS SPM installation using either method, the following message appears:**

```
SPM WINDOWS 95 HARD DISK INSTALLATION PROGRAM
Press any key to continue.
```

▶ **4. Press any key to begin the installation.**

▶ **5. If your PC does not have a copy of print.exe in any directory listed in your system's PATH environment, the following message appears:**

```
Copying print.exe to directory c:\spm
file(s) copied

WARNING - The application you are adding to the Windows version
table may not have been verified by Microsoft in this version of
Windows. Please contact your software vendor for information on
whether this application will operate properly under this version
of Windows. If you execute this application by instructing
Windows to report a different MS-DOS version number, you may
lose or corrupt data, or cause system instabilities. In that
circumstance, Microsoft is not responsible for any loss or
damage.

Version table successfully updated.
The version change will take effect the next time you restart
your system.

*******************************************************

SPM Note: The warning message seen above was produced by the
SETVER command. This command was used in the SPM install program
to set the proper version of PRINT.EXE file in the DOS version
table. Please note that in Windows 95, running SETVER always
produces the warning message seen above, even when the command
is run properly.

*******************************************************

Press any Key to continue . . .
```

▶ **6. Press any key to continue installation. When SPM installation is complete the following message appears:**

```
Installation of SPM for DOS on your Windows 95 hard drive is now
complete. For easy access to SPM from Windows 95, configure an
SPM.PIF file. See the SPM Manual for details. Press any key to
continue . . .
```

▶ **7. Press any key.**

- If you installed DOS SPM using Method 1 in Step 2, close the DOS Window by typing *exit* at the DOS prompt and pressing [Enter↵]. If the window does not close, then the Close on Exit option for the DOS window is not set. In this case, close the window by clicking on the upper right window icon (the box with an **x** in it).
- If you installed DOS SPM using Method 2 in Step 2, the DOS window closes automatically.

▶ **8. If the print.exe file was copied to your PC in Step 5, you must reboot your PC.**

▶ **9. You should now configure a PIF file for SPM. Use the instructions that follow.**

Configuring a PIF file for DOS SPM

Refer to the Windows 95 Help topic, “PIF editor,” for details about using the PIF editor to implement an SPM PIF file to work with the spm.exe file.

Configure a PIF file for DOS SPM by doing the following:

1. In the Windows Explorer, select the SPM application file. Then select the menu item **File:Properties**. The screen that pops up will have tabs along the top.
2. In **Program Tab**:, put the following line in the **Working Directory** entry:

   `C:\SPM`

3. In **Program Tab**:, put the following line in the **Batch File** entry:

   `C:\SPM\SPM.BAT`

4. In **Program Tab:**, make sure the **Close on Exit** checkbox is checked.

You can now double-click on either the SPM application icon or the SPM “Shortcut to MS-DOS” icon to run SPM. When you quit SPM (by pressing the **Home** key), the window closes automatically.

Hiding the spm.exe and spm.bat Files

If you want to hide the spm.exe and spm.bat files, use the following steps:

1. In the Windows Explorer, select each file.
2. Click **File** from the menu bar, then select **Properties**.
3. In the Properties dialog box, click on the **Hidden** checkbox located under the **General Tab** in the **Attributes** section.

Initializing the SPM Software

To run correctly, the DOS version of SPM requires certain information (transmission speed, type of monitor, and so on). You need to supply this information only once, the first time you run SPM.

The information you provide during the initialization process is written to the SPM configuration file (ams.cfg). If you need to change this information at some later time, you can do so in either of the following ways:

- Use any of the options in Table 2–1 to change the information in ams.cfg.
- Edit the ams.cfg file. (If you are unsure about editing the file, you can remove it. You are prompted to reinitialize the next time you invoke SPM. The file is created at that time.)

NOTE:
The DEBUG attribute is also specified in ams.cfg as DEBUG=0 (off), the factory setting, or DEBUG=1 (on). This attribute is used to enable the Escape-to-Shell feature of SPM, activated by pressing Ctrl + 9. To turn DEBUG on, you must edit the ams.cfg file; it is not part of the initialization process. The DEBUG attribute is for use by qualified service personnel only.

Table 2–1. SPM Configuration File (ams.cfg) Options

Option	Use
spm –com1	Specifies COM1 as the serial communications port used by SPM
spm –com2	Specifies COM2 as the serial communications port used by SPM
spm –s1200	Specifies modem speed of 1,200 bps
spm –s2400	Specifies modem speed of 2,400 bps
spm –color	Specifies color monitor
spm –mono	Specifies monochrome monitor
spm –l english	Specifies English as the PC language
spm –l french	Specifies French as the PC language
spm –l spanish	Specifies Spanish as the PC language

Follow the steps below to perform the SPM initialization.

▶ **1. Type *spm* and press Enter↵ to display the SPM Welcome screen shown in Step 2.**

- Make your entry at the C:> prompt if you have installed SPM on your PC's hard disk.
- Make your entry at the A:> prompt if you are using the floppy drive.

▶ **2. Press any key.**

```
Welcome to SPM
The MERLIN LEGEND
System Programming
& Maintenance Utility
Please press any key
to continue
Version X.XX
```

X.XX = current version of SPM

The screens shown in Steps 3 through 7 appear only if the system has not been initialized. Otherwise, the screen shown in Step 8 appears.

▶ **3. Select the serial communications port used for SPM and press Enter↵.**

```
COMM PORT:
1.  Comm 1
2.  Comm 2
Enter selection #
```

Type *1* for serial port 1 (COM1).
Type *2* for serial port 2 (COM2).

▶ **4. Select the communications port speed and press Enter↵.**

```
Speed:
1.  1200
2.  2400
Enter selection #
```

Type *1* for 1,200 bps.
Type *2* for 2,400 bps.

▶ **5. Respond to the color prompt and press Enter↵.**

```
COLOR
Enter selection (y/n):
```

Type *y* if you have a color monitor.
Type *n* if you do not have a color monitor.

▶ **6. Select a language and press Enter↵.**

```
Language:
1.  English
2.  French
3.  Spanish
Enter selection #:
```

Type *1* for English.
Type *2* for French.
Type *3* for Spanish.

The language you select here becomes the SPM (PC) language.

▶ 7. Review your selections.

```
SPM CONFIGURATION:
Comm Port:  x
Speed: x
Color: x
Desire change (y/n)?
```

x = the values entered for each entry in Steps 3 through 5

- To change any of the information shown, type [Y] and press [Enter↵]. The screen shown in Step 3 appears. Repeat Steps 3 through 6.
- To save the information shown, type [N] and press [Enter↵].
  - — If the PC is connected to the processor, the SPM Main Menu appears as shown in Step 8.
  - — If the PC is not connected, go to "Connecting the PC" on page 2–13.

▶ 8. Press the function key that corresponds to the option you want.

```
      SPM Main Menu
Menu: Select Function
F1  Sys Program     Maintenance  F6
F2  Backup          Restore      F7
F3  Boards          Pass-Thru    F8
F4  Print Opts      Password     F9
F5  Monitor         Language     F10
```

NOTE:
The function keys shown on either side of the display are included here for quick reference. See "SPM Screens" on page 2–21 for details on using the PC keys in SPM.

Connecting the PC

There are three ways to connect the PC to the control unit. Choose the method below that is most useful for your installation.

- Direct local connection
- Local modem connection
- Remote modem connection

Direct Local Connection

For a direct local connection, you must connect the PC to the system programming jack. This is the lower modular RS-232 jack on the processor module, as shown in Figure 2–1. (The upper jack is reserved for the SMDR printer.)

To connect a PC more than fifty feet from the control unit, see Figure 2–2.

For direct local connections, the system supports speeds of 1,200 and 2,400 bps.

NOTE:
You must use a direct local connection to program in surrogate mode.

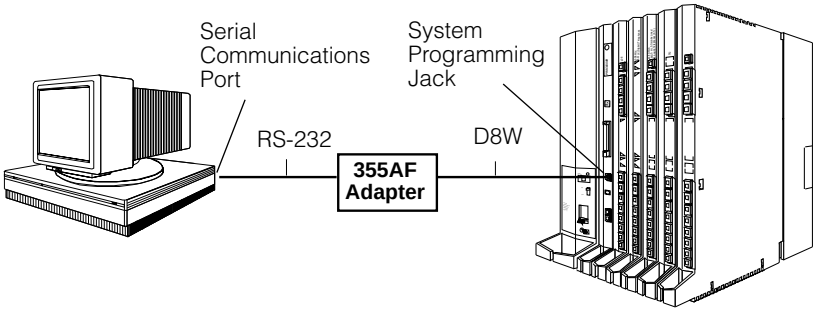

Figure 2–1. Direct Local Connection

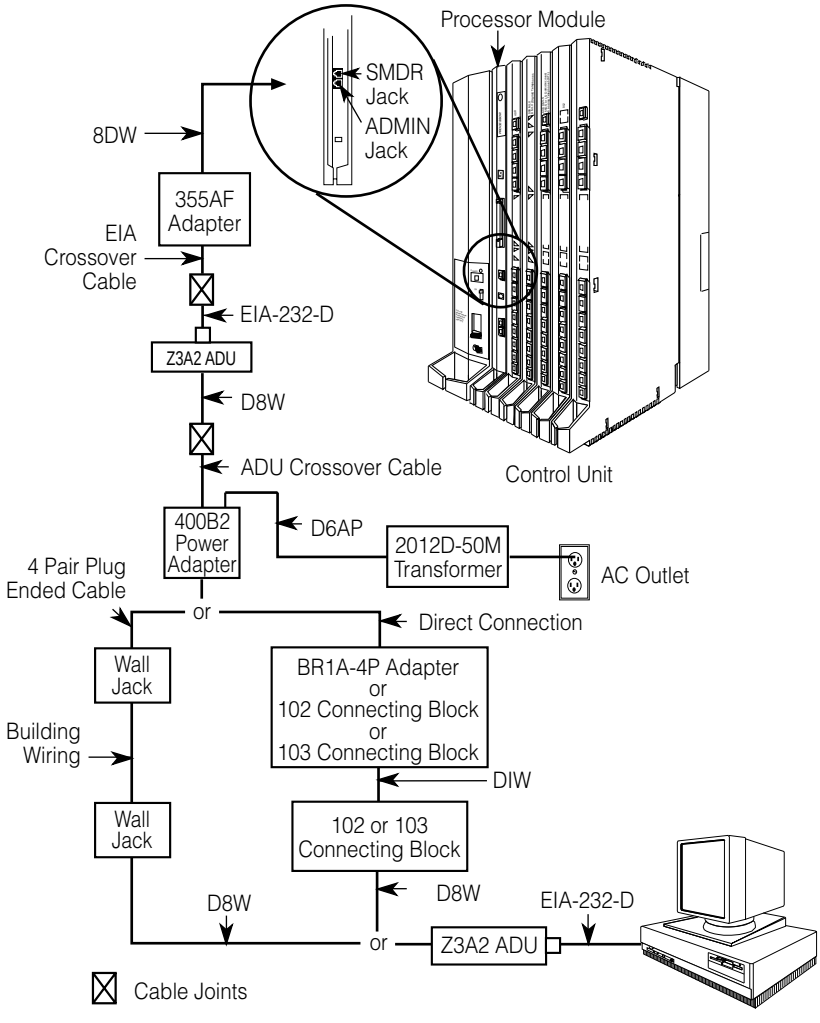

Figure 2–2. Direct Local Connection, PC More Than 50 ft. Away

Local Modem Connection

For a local modem connection, you must use a modem (either connected to, or built into, the PC) to access the internal modem in the control unit. Connect the modem to an 012 T/R or 016 T/R module in the control unit, as shown in Figure 2–3.

The internal modem operates at speeds of 1,200 and 2,400 bps.

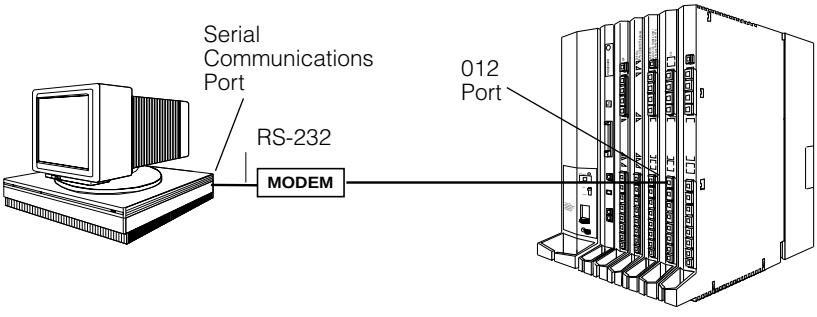

Figure 2–3. Local Modem Connection

Remote Modem Connection

For a remote modem connection, you must use a modem (either connected to, or built into, the PC) to access the internal modem in the control unit. You must also use a dial-up connection, as shown in Figure 2–4. See "Accessing SPM" on page 2–17 for details on accessing SPM with a remote modem connection.

The internal modem operates at speeds of 1,200 and 2,400 bps.

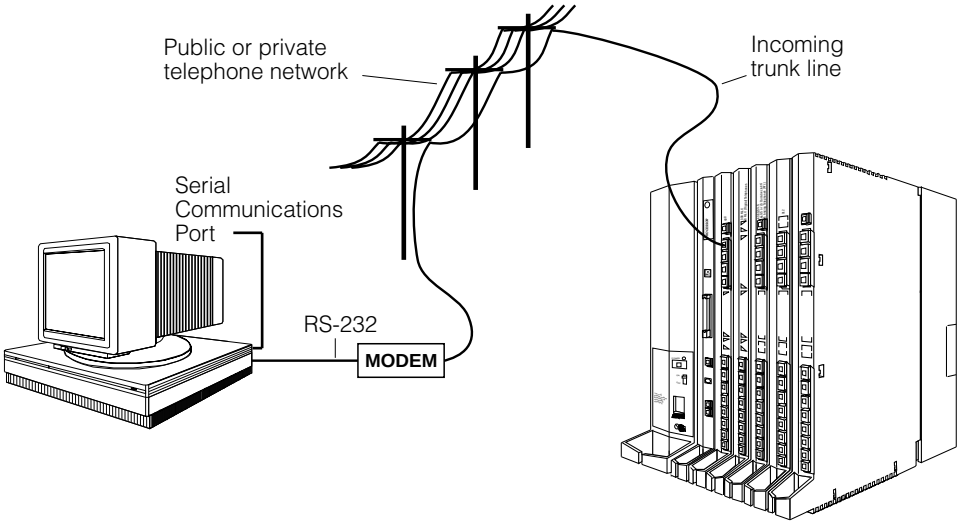

Figure 2–4. Remote Modem Connection

NOTE:
Remote access (modem connection) has priority over local access (direct connection), unless a backup or restore procedure is in progress through a direct local connection. If a modem connection is attempted while any other type of onsite programming is in progress (either at the system or at a directly-connected PC), the system sends a message to the onsite programmer. The message indicates that a modem connection is being established and the onsite programming session is terminated.

Accessing SPM

The procedure for accessing SPM depends on whether your PC is connected to the control unit with a modem (either local or remote) or without a modem (direct). This section covers both of these access procedures.

With a Direct Local Connection

To access SPM when your PC is connected directly to the control unit, follow the steps below.

▶ **1. Set up the appropriate physical connections between the PC and the control unit.**

See “Connecting the PC” on page 13.

▶ **2. If you installed SPM on the hard disk of the PC, go to Step 5.**

▶ **3. If SPM is not installed on the hard disk, insert the SPM disk into Drive A.**

▶ **4. Type *a:* and press Enter↵.**

A:> appears on the screen.

▶ **5. Type *spm* and press Enter↵ to display the SPM Welcome screen shown below.**

```
   Welcome to SPM
 The MERLIN LEGEND
 System Programming
& Maintenance Utility
Please press any key
    to continue
    Version X.XX
```

X.XX current version of SPM

▶ **6. Press any key to display the SPM Main Menu shown below.**

```
      SPM Main Menu
Menu: Select Function
F1  Sys Program     Maintenance  F6
F2  Backup          Restore      F7
F3  Boards          Pass-Thru    F8
F4  Print Opts      Password     F9
F5  Monitor         Language     F10
```

NOTE:
The function keys shown on either side of the display are included here for quick reference. See "SPM Screens" on page 2–21 for details on using the PC keys in SPM.

- If the SPM Main Menu does not appear or if the information on the screen is garbled, press any key again.
- If the COM Port (communications port) screen appears instead of the SPM Main Menu, it indicates that the SPM software has not been initialized. See "Initializing the SPM Software" on page 9.

▶ **7. To select an option, press the function key that corresponds to the option you want. For example, press F10 to select Language.**

With a Local or Remote Modem Connection

The method you use to access SPM by modem depends on whether you are programming onsite (locally) or from a remote location.

- If you are onsite, the modem must be connected to an 012 T/R or 016 T/R module on the control unit. To establish a connection to the control unit's internal modem, dial ***10.**
- If you are at a remote location, do one of the following:
  - — Place a call to the system on a Remote Access line, enter the barrier code (if required), and dial the code for the internal modem (***10**).
  - — Place a voice call to the system using the line to which the modem is connected and ask the operator to transfer you to the modem (by pressing **Transfer,** dialing ***10**, then hanging up the telephone). When you hear the modem answer tone, switch to data mode.

Considerations

Review the following items before you begin the modem connection procedure.

Set the Programming Language

If you prefer to program in a language other than the current SPM language setting, see "Language" on page 2–41.

Modem Connections

You must make a data connection to a modem. The following modem dialing commands are for Hayes® and Hayes-compatible modems. These may not be the commands your modem uses — refer to the user guide that came with your modem for specific information.

- If the PC is in the same location as the control unit, type **10*.
- If the PC is in a remote location and your system has the Remote Access feature activated, type the following and press [Enter↵]:
  - Without barrier codes type:

    ATDT ; the remote access telephone number; and *W*10*.
    For example: *ATDT1201555 1234 W*10* [Enter↵].
  - With barrier codes type:

    ATDT ; the remote access telephone number; the barrier code preceded by a "*W*" and *W*10*. The barrier code in the example below is 555555.
    For example: *ATDT1201555 1234 W555555 W*10* [Enter↵].
- The password prompt appears on the screen when the connection is made. (You may have to press [Enter↵] more than once to get the password prompt.)
- If the PC is in a remote location and your system has not activated the Remote Access feature, do the following:
  - Use the main telephone number to place a voice call to the system on the line to which the modem is connected.
  - Instruct the operator to transfer you to the modem (by pressing **Transfer,** dialing **10*, then hanging up the telephone).
  - To put the modem on line, type *ATH1* and press [Enter↵], then hang up the telephone.

NOTE:
If you enter a telephone number of fewer than 11 digits, you must end it with a pound sign (#).

To access SPM through a local or remote modem connection, follow the steps below.

▶ **1. Set up the appropriate physical connections between the PC and the control unit.** **See "Connecting the PC" on page 13.**

▶ **2. Type *spm* and press [Enter↵] to display the SPM Welcome screen shown below.**

```
Welcome to SPM
The MERLIN LEGEND
System Programming
& Maintenance Utility
Please press any key
to continue
Version X.XX
```

X.XX = current version of SPM

If you wish to program in a language other than the current language set for SPM, see "Language" on page 2–41.

▶ **3. Press any key to display a blank screen on which you can enter modem commands. (You may have to press the key several times.)**

▶ **4. Make a data connection to the modem of the control unit.**

See “Modem Connections” on page 18. When the connection is made, the password prompt appears as shown in Step 5.

▶ **5. Type the SPM password to display the SPM Main Menu shown in Step 6.**

```
Enter Password:
```

The password does not display as you type it.

▶ **6. To select an option, press the function key that corresponds to the option you want. For example, press F10 to select Language.**

```
        SPM Main Menu
Menu: Select Function
F1  Sys Program     Maintenance   F6
F2  Backup          Restore       F7
F3  Boards          Pass-Thru     F8
F4  Print Opts      Password      F9
F5  Monitor         Language      F10
```

NOTE:
The function keys shown on either side of the display are included here for quick reference. See “SPM Screens” on page 2–21 for details on using the PC keys in SPM.

Using SPM

This section describes how to use the SPM screens, SPM Help, and the SPM options listed below.

- Backup
- Boards
- Browse
- Convert
- Language
- Maintenance
- Monitor
- Pass-Thru
- Password
- Print Options
- Restore
- System Programming

NOTE:
Some of the procedures described in this section should be performed by qualified service personnel only.

SPM Screens

SPM screens simulate the system programming console. Each SPM screen includes a 7-line by 24-character console simulation window that corresponds to the display area of the MLX-20L telephone. To the right and left of this console simulation window are columns that list the keys corresponding to similarly located buttons on the MLX-20L telephone. If you are working with Version 2.0 or higher, the version number appears in the upper left corner of the screen (for example, V6). Figure 2–5 illustrates the SPM display screen.

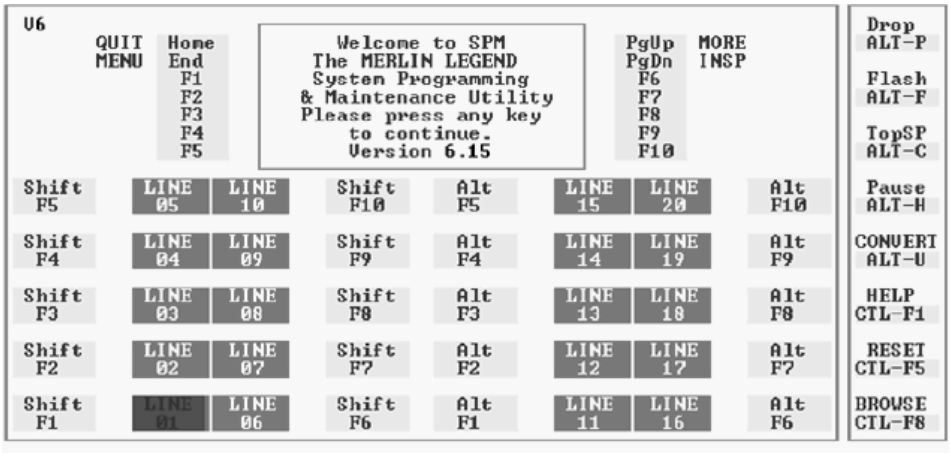

Figure 2–5. SPM Display

F1 through F5, and F6 through F10 display on either side of the console simulation window. They represent the function keys to use when you select screen options. When a screen contains several choices, press the function key identified by the label next to your choice. (If you were programming on the console, you would press the telephone button next to your choice.)

Below the console simulation window are 20 simulated line buttons. The 20 line buttons can be selected using the arrow keys to position the cursor on the appropriate button. Using PgDn (the Inspect feature), you can determine the status of each line and the features programmed on each line according to the letter that appears next to the line number (see below).

On the PC screen, the letters R and G represent the ON state of the red and green LEDs, respectively, that are on the console. For example, if a line, trunk, or pool is assigned to a line button, a green LED lights next to the button on the console. On the PC screen, the letter G (for green) displays next to the button. Similarly, if a line, trunk, or pool is not assigned to a line button, neither G nor R display next to the button on the PC screen. If a trunk is assigned to a pool, an R (for red) displays on the PC screen.

The labels in the column on the right side of the screen show key combinations that correspond to buttons on the MLX-20L telephone. Table 2–2 describes the function of PC keys in SPM.

Table 2–2. Function of PC Keys in SPM

PC Key	Console	SPM Function
Home	Home	**Quit.** Exit from SPM and return to the DOS prompt when you finish with system programming. If you are using a modem, the call is disconnected.
End	Menu	Return to the SPM Main Menu.
PgUp	More	Display more menu items (when there is another screen and the **>** symbol appears next to the key).
PgDn	Inspct	Show the current information that has been programmed for a feature or button.
Alt + P	Drop	Enter a stop in a speed-dialing sequence. This combination also deletes an entry in a field on any screen, except one in which you are entering a speed-dialing sequence.
Alt + F	Conf	**Flash.** Enter a switchhook flash in a speed-dialing sequence.
Alt + C	n/a	**TopSP.** Return to the top of the System Programming menu.
Alt + H	Hold	**Pause.** Enter a pause in a speed-dialing sequence.
Alt + U	n/a	**Convert.** Convert a backup file from its original Release format to a different Release format.
Alt + N	n/a	Toggle modem speed between 1,200 and 2,400 bps.
Ctrl + F1	n/a	**Help.** Display a help screen about SPM operations. To exit from Help, press End.
Ctrl + F5	n/a	**Reset.** Reset the communications port. For example, if the information on the screen is garbled, try exiting from and then re-entering the screen. If the screen remains garbled, use Ctrl + 5 to clear the screen and return to the SPM Welcome screen. Note that using Ctrl + 5 drops the modem connection.
Ctrl + F8	n/a	**Browse.** View print reports saved with Print Opts.

Continued on next page

Table 2–2. Function of PC Keys in SPM (*Continued*)

PC Key	Console	SPM Function
Ctrl + F9	n/a	Escape to shell. To use this key sequence, you must set DEBUG=1 in the configuration file ams.cfg. You can then use this key sequence to execute DOS (or UNIX System) commands. To return to SPM, type *exit*.
Enter ↵	Enter	The Enter ↵ key on your PC can be used instead of F10 when Enter appears as a choice in the console simulation window.
Bksp	Backspace	The Bksp key on your PC can be used instead of F9 (Backspace) when Backspace appears as a choice in the console simulation window.
Del	Delete	The Del key on your PC can be used instead of F8 (Delete) when Delete appears as a choice in the console simulation window.
↑ ↓ ← →	n/a	The up, down, left, and right arrow keys can be used to highlight selections in a menu and to select the 20 line buttons below the console simulation window.

SPM Main Menu Options

The SPM Main Menu provides access to system programming and to the SPM functions listed in Table 2–3.

Table 2–3. SPM Main Menu Options

SPM Menu Option	Function
Sys Program	To program the system
Backup*	To make a backup copy of your system programming and store it on a floppy disk or on hard disk
Boards*	Shows which modules (port boards) are in each slot of the control unit and allows you to assign boards to slots
Print Opts*	Directs reports to the printer or to the PC for storage on a floppy disk or on hard disk
Monitor*	Restricted to use by your technical support organization
Maintenance	Restricted to use by your technical support organization and qualified technicians
Restore*	To restore your system programming from floppy disk or from hard disk
Pass-Thru*	(IS II/III only) To make a remote connection, through the control unit, to an IS II/III PC to program applications on the IS II/III PC
Password*	To change the password for remote entry into the system
Language	To select a language (English, French, or Spanish) for the console simulation window on the PC. (There is also a Language option available on the System Programming menu that allows you to set the system language.)

* SPM option only. Not available on the MLX-20L system programming console. To be used only by qualified service personnel.

SPM Help

To access the SPM help screens, press Ctrl + F1.

To review the help screens press, PgUp and PgDn.

To return to the first help screen, press Home.

To exit from SPM help, press End.

A typical help screen is shown in Figure 2–6.

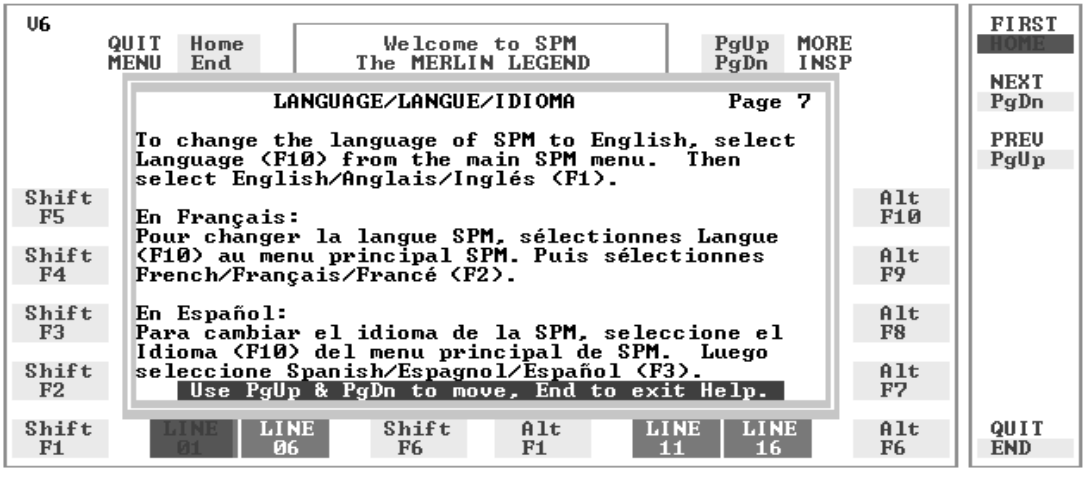

Figure 2–6. SPM Help

Backup

The Backup procedure is used by qualified service personnel to create a file of system programming information either in the \spm\backup directory (on the hard drive of the PC) or in the root directory of a floppy disk.

NOTE:
Back up your system programming information on a regular basis. A current backup file allows you to quickly and easily restore your system, if the need arises.

Determining the Release Number of a Backup File

If you have a backup disk but do not know its release number, you may be able to find this information in the backup header.

Beginning with later versions of Release 1.1, the backup file contains a backup header 128 bytes long. Approximately 59 of these bytes are currently used. Bytes 55 through 59 of the header contain the MERLIN Legend Communication System Release number, as shown in Table 2–4. (Release 1.0 and early versions of Release 1.1 do not contain this information in readable form.)

Table 2–4. Backup Header: Release Number

	Release No.	Build No.	System Size	Mode
Size	2 bytes	12 bytes	1 byte	1 byte
Examples	06 00	32	01	01 (Key)
	04 02			02 (Behind Switch)
				03 (Hybrid/PBX)

The release number is found in the first two bytes (four characters) of the identification number. For example, 0600 = 6.0, 0402 = 4.2.

If the backup file is compressed (Release 1.1 and later), you can read the header but you cannot read the data area following the header. Use *type* [*backup filename*] to read the header on a DOS system or *cat* [*backup filename*] to read the header on a UNIX System.

Note that it is the communication system release number, not the version number of SPM, that reflects whether the backup file is compressed or uncompressed. Release 1.0 backups are uncompressed and Release 1.1 and later backups are compressed. Uncompressed files take longer to restore.

Considerations

Review the following items before you begin the backup procedure:

- The communications system does not have to be idle during backup; however, extension programming is blocked.
- Any objects that are in a maintenance-busy state are stored in that state. When you restore system programming, these objects are busied out, even if they have since been released from the maintenance-busy state.
- If you plan to store your backup file on a floppy disk, format a DOS disk. (DOS formatting can be done on either a UNIX System PC or a DOS PC).
- Uncompressed backup files are 100,000 to 210,000 bytes in size; compressed files are about 70,000 to 85,000 bytes.
- Maintenance data (error logs and other data used by qualified service technicians) is not saved in the backup file.

Follow the steps below to perform the backup procedure.

1. At the SPM Main Menu, press F2 to select Backup.

F2

```
    SPM Main Menu
Menu: Select Function
Sys Program     Maintenance
Backup          Restore
Boards          Pass-Thru
Print Opts      Password
Monitor         Language
```

2. Follow the instructions for a floppy or a hard disk.

A second window appears which displays the GOTO FLOPPY and MAKE NEW FILE options and a directory listing for the C:\spm\backup directory.

- If you are saving the backup file to a floppy disk, go to Step 3.
- If you are saving the backup file to the hard disk, go to Step 4.

▶ **3. Remove the SPM disk from the floppy drive and insert a formatted disk. Use the arrow keys to highlight GOTO FLOPPY and press Enter↵.**

```
Make a selection for
 the BACKUP file.
MAKE NEW FILE will
 create a new file
 on selected device.

Press ESC to abort.
```

```
GOTO FLOPPY
MAKE NEW FILE
backup.ams
file.1
file.2
```

After you press Enter↵, the GOTO FLOPPY statement shown above changes to GOTO HARD DISK and the directory listing for A:\ is displayed. Continue with Step 4.

The screen displays the default name for the backup file (backup.ams).

▶ **4. Specify a backup filename.**

- To select the default filename, use the arrow keys to highlight backup.ams and press Enter↵. Go to Step 6.
- To enter a different filename, use the arrow keys to select MAKE NEW FILE and press Enter↵. Go to Step 5.

▶ **5. Type the new filename and press Enter↵.**

```
Press ESC to Abort.



Enter filename:


(default is backup.ams)
```

If you are working from the floppy drive, A:\ appears on the screen.

You can specify a drive letter with the filename but no path information.

▶ 6. Verify that the filename chosen does not already exist.

The following screen appears only if the filename chosen already exists. Continue with Step 7 if this screen does not appear.

```
The file already exists.
If you continue, the old
version will be deleted.
Press ESC to abort.
or c to continue.
```

Press [Esc] to abort the backup. Go to Step 1 to create a different backup file.

Press [C] to continue. Go to Step 7.

▶ 7. Observe the backup status screen.

```
Press ESC to Abort.
Est. Blocks: xxx - xxxx

  filename

BACKUP IN PROGRESS
Received Block xx
```

filename = the backup filename specified in Step 5

SPM indicates the status of the backup by displaying the number of the last block received (*xx*). Line 2 of the display screen shows the estimated number of blocks to be sent from the control unit (*xxx–xxxx*). This line is blank if you are backing up from Release 1.0.

If you abort the backup, the partial backup file is deleted to prevent restoration from a corrupted file and you see the screen shown in Step 8.

When the backup is complete, you see the screen shown in Step 9.

▶ **8. To abort the backup, press Esc to return to the SPM Main Menu.**

```
Press ESC to Abort.
Est. Blocks: xxx - xxxx

  filename

BACKUP IN PROGRESS
XMODEM ABORT - User
```

▶ **9. When the backup is complete, press Enter↵ to return to the SPM Main Menu.**

```
Backup successful.
Please press Enter
to see the Main Menu



Received xxx Blocks
```

xxx = total number of blocks received

Boards

The Boards option allows qualified service personnel to add a board to the next available slot. The system must be idle to use this option. This option is not available from the system programming console.

The Boards option is also available in surrogate mode. In surrogate mode, you can assign trunk and extension modules (boards) to slots, even though the boards have not actually been installed. This type of board is referred to as a “phantom” or “null” board.

You cannot use the Boards option to change an actual board type. All boards assigned with the Boards option, including phantom boards, are cleared (unassigned) if you perform a board renumber (System→Board Renum).

NOTES:

1. You must assign phantom boards to higher slot numbers than those you assign to any real boards. If you assign a phantom board to a lower slot number than a real board, the control unit does not recognize the real board(s) that follow the phantom board.
2. If you remove a board but do not replace it, and then perform a board renumber, the control unit will not recognize any boards that follow the empty slot. You must reseat all of the boards to fill the empty slot before you perform the board renumber.

The Inspect function (PgDn) lets you see which modules have been assigned to slots on the control unit. Note that both phantom boards and real boards display if you use the Inspect function. Table 2–5 shows the type of boards that you can select. To see only real board assignments, you must print the System Information report:

System→**More**→Print→SysSet-up

Table 2–5. Board Types

Board Type	Description
400LSR	4 loop-start line jacks with 4 touch-tone receivers
400GLR	4 ground-start/loop-start line jacks with 4 touch-tone receivers
800LS	8 loop-start line jacks
800GLID	8 ground-start/loop-start line jacks with Caller ID capability available on the loop-start lines and 2 touch-tone receivers
800GLS	8 ground-start/loop-start line jacks
408LSA	4 loop-start line jacks and 8 ATL analog extension jacks
408GLA	4 ground-start/loop-start line jacks and 8 ATL analog extension jacks
408GLM	4 ground-start/loop-start line jacks and 8 MLX extension jacks (16 endpoints)
008ATL	8 analog extension jacks
008MLX	8 MLX-20L extension jacks (16 endpoints)
012TR/OPT	12 tip/ring extension jacks with 2 touch-tone receivers or 008 OPT jacks
016TRR	16 tip/ring extension jacks with 4 touch-tone receivers
800DID	8 DID trunk jacks with 2 touch-tone receivers
400E&M	4 E&M tie trunk jacks
100D	1 DS1 jack (24 channels)
800BRI	8 BRI trunk jacks (16 channels)

Follow the steps below to assign modules.

▶ **1. At the SPM Main Menu, press F3 to select Boards.**

```
     SPM Main Menu
Menu: Select Function
Sys Program      Maintenance
Backup           Restore
Boards           Pass-Thru
Print Opts       Password
Monitor          Language
```

F3

▶ **2. Press the function key that corresponds to the module you want to select.**

```
Boards:                  >
Make a selection
408LSA           800LS
012TR/OPT        008ATL
800DID           008MLX
800GLS           400GLR
Exit             400LSR
```

F1 F2 F3 F4 F5 F6 F7 F8 F9 F10

```
Boards:
Make a selection
400E&M           016TRR
408GLA           800GLID
100D             800BRI
408GLM
Exit
```

F1 F2 F3 F4 F5 F6 F7 F8

If the module you want to assign is not shown on the first screen of the Boards menu, press PgUp to display the next menu screen.

▶ **3. Type the control unit slot number (01 through 17) in which the module is to be installed.**

```
module name
Enter slot numbers
(01-17)

                 Delete
Backspace        Next
Exit             Enter
```

module name = option selected in Step 2

▶ 4. Assign or remove the module from the slot entered in Step 3.

```
module name
Enter slot numbers
(01-17)
nn
                    Delete        F8
Backspace           Next          F9
Exit                Enter         F10
```

module name = option selected in Step 2
nn = slot entered in Step 3

- To remove the module type from the specified slot number, press F8 **(Delete).** The Boards menu reappears.
- To assign the module type to the specified slot number and assign that same module type to another slot, press F9 (Next).
- To assign the module type to the specified slot number and assign a different module type to another slot, press F10 (Enter).
- To terminate the procedure and assign a different module, press F5 (Exit) and repeat Steps 2 through 4.
- To view types of modules assigned to all slots, press PgDn (Inspect).

▶ 5. Save your entry.

Select Exit. F5

The programming session terminates and the system restarts.

Browse

The Browse option allows you to browse through reports saved in the Reports directory (\spm\reports) on the hard disk of the PC or on a floppy.

▶ **1. At the SPM Main Menu, press F3 to activate the Browse option.**

```
    SPM Main Menu
Menu: Select Function
Sys Program      Maintenance
Backup           Restore
Boards           Pass-Thru
Print Opts       Password
Monitor          Language
```

▶ **2. Use the arrow keys to highlight the source (hard disk or floppy) from which you want to view the reports and press F10.**

```
Please enter file name



Press ESC to Abort.
```

```
GOTO FLOPPY
FILENAME.XXX
FILENAME.YYY
```

A list of the current reports appears.

FILENAME.XXX and *FILENAME.YYY* from the \spm\reports directory of the hard disk.

▶ **3. Use the arrow keys to highlight the report you want to view and press F10.**

The report appears.

- To view the next page of a report, press PgDn.
- To view the previous page of a report, press PgUp.
- To return to the beginning of a report, press Home.
- To exit from the Browse option and return to the SPM Main Menu, press Esc.

Convert

The Convert option (which can be used remotely) simplifies upgrading from an earlier release to a current release of the communications system. See "Upgrading the System" on page 2–56. This procedure should be done only by Lucent Technologies personnel or your authorized dealer.

To convert system programming to Release 6.1 format, Version 6.25 (or later) of SPM is required. This version can be easily identified by the version number that appears on the last line of the console simulation window.

Help screens are available to guide you through the Convert procedure. See "SPM Help" on page 26.

Before you use the Convert option, you must complete the following tasks:

- Make sure you have the appropriate version of the SPM software. See "Upgrading the System" on page 2–56 and "Installing the SPM Software" on page 2–3.
- Back up existing system programming. See "Backup" on page 27.
- Make sure you know the name of the backup file that you have created.

NOTES:

1. Once the actual file conversion begins, you cannot stop the process; pressing [Esc] has no effect.
2. If multiple MERLIN LEGEND Systems are connected in a private network, when converting to Release 6.1, convert the hub switch first. This provides a working network in the event that all switches in the private network are not converted at the same time.

Follow the steps below to perform the conversion.

1. At the SPM Main Menu, press [Alt] + [U] to begin the conversion.

```
    SPM Main Menu
Menu: Select Function
Sys Program     Maintenance
Backup          Restore
Boards          Pass-Thru
Print Opts      Password
Monitor         Language
```

▶ **2. Follow the instructions for a floppy or hard disk.**

A second window appears which displays the GOTO FLOPPY option and a directory listing for the C:\spm\backup directory.

- If the backup file is stored on a floppy disk, go to Step 3.
- If the backup file is stored on the hard disk, go to Step 4.

▶ **3. Use the arrow keys to highlight GOTO FLOPPY and press Enter↵.**

```
Please select file name
    to convert from,
    then press Enter.

   Press ESC to Abort.
```

```
GOTO FLOPPY
FILENAME.XXX
FILENAME.YYY
```

FILENAME.XXX and *FILENAME.YYY* are from the \spm\backup directory.

After you press Enter↵, the GOTO FLOPPY statement shown above changes to GOTO HARD DISK and a directory listing from the root directory of the floppy disk appears.

```
Please select file name
    to convert from,
    then press Enter.

   Press ESC to Abort.
```

```
GOTO HARD DISK
FILENAME.XXX
FILENAME.YYY
```

FILENAME.XXX and *FILENAME.YYY* are from the root directory of the disk in Drive A.

▶ **4. Use the arrow keys to highlight the name of the backup file to be converted and press Enter↵.**

- If the backup file you select is a 6.1 backup, it cannot be converted. The following message appears:

  File has already been converted.
  Press Enter to continue.

  Press Enter↵ to select another filename, or press Esc to abort the convert procedure.

- If the backup file you select can be converted, go to Step 6.

▶ **5. Observe the updated file selection screen and press Enter↵.**

```
Please select file name
    to convert from,
    then press Enter.

N: FILENAME.XXX
   Press ESC to Abort.
```

FILENAME.XXX =the backup filename selected in Step 4
N = drive

▶ **6. Observe the CONVERT TO screen. Select the CONVERT TO release then press Enter↵.**

The example screen below appears when converting from Release 1.0 or 1.1. The actual CONVERT TO releases displayed will be dependent upon the release of the backup file that was selected in Step 4.

```
Please enter your
CONVERT TO release
and press Enter.
1.2     1.4     2.0     2.1
3.0     3.1     4.0     4.1
4.2     5.0     6.0     6.1
Enter Number:x.x
```

All characters must be entered as they appear on the screen, including the decimal point.

NOTE:
If the CONVERT TO screen is not displayed, an invalid CONVERT FROM filename was specified. Quit SPM and restart the procedure.

▶ **7. Follow the instructions for a floppy or a hard disk.**

- If the CONVERT TO file will be saved to a floppy disk, go to Step 8.
- If the CONVERT TO file will be saved to the hard disk, go to Step 9.

▶ **8. Use the arrow keys to highlight GOTO FLOPPY and press Enter↵.**

```
Please select file name
to convert to, or select
NEW FILE to create a new
 file on selected drive.
    Enter Filename:
```

```
GOTO FLOPPY
MAKE NEW FILE
FILENAME.XXX
FILENAME.YYY
```

After you press Enter↵, the GOTO FLOPPY statement shown above changes to GOTO HARD DISK and the directory listing from the root directory of the disk in Drive A appears. Continue with Step 9.

```
Please select file name
to convert to, or select
NEW FILE to create a new
 file on selected drive.
    Enter Filename:
```

```
GOTO HARD DISK
MAKE NEW FILE
FILENAME.XXX
FILENAME.YYY
```

▶ **9. Specify a filename for the converted file.**

- Highlight the name of the file you want to convert to, press Enter↵, and go to Step 11.
- To enter a different filename, use the arrow keys to select MAKE NEW FILE, and press Enter↵.

▶ **10. Enter the new filename, and press Enter↵.**

```
Please select file name
to convert to, or select
NEW FILE to create a new
 file on selected drive.
    Enter Filename:
A:\filename.new
(default is RESTORE.NEW )
```

The converted file cannot have the same name as the file from which you converted. If you specify the same filename, the following screen appears:

```
 If you continue, the old
version will be deleted
press ESC to abort,
or "c" to continue.
```

Press [Enter↵] and repeat this step.

▶ **11. Check the updated file screen, and press [Enter↵].**

```
Please select file name
to convert to, or select
NEW FILE to create a new
 file on selected drive.
     Enter Filename:
N: FILENAME.NEW
(default is RESTORE.NEW)
```

FILENAME.NEW = name entered in Step 9 or 10
N = drive

Observe the conversion progress screen.

```
CONVERSION IN PROGRESS

    Converting From:
N: FILENAME.XXX
    Converting To:
N: FILENAME.NEW
```

FILENAME.XXX = name entered in Step 4
FILENAME.NEW = name entered in Step 9 or 10
N = drive

When the conversion completes, the screen shown in Step 12 appears.

▶ **12. Press any key to return to the SPM Main Menu.**

```
    Conversion successful.
     Please press any key
        to continue.
```

Language

A language attribute in the SPM configuration file \spm\ams.cfg (DOS version) or /usr/ams/ams.cfg (UNIX System version) specifies whether SPM menus, pop-up windows, and other messages are presented in English, French, or Spanish. A second language selection option affects messages from the control unit to SPM, and controls the display on the console simulation window for the duration of the session. These two language options operate independently of each other.

The following discussion refers to the language specified in the SPM configuration file as the *PC language* and the language used by the control unit as the *console window language.*

PC Language

During SPM installation, you select a language that is recorded in the SPM configuration file. Any time thereafter, SPM can be started with the *–l* option to specify a different language, using one of the following command lines:

- *spm –l english*
- *spm –l french*
- *spm –l spanish*

Note that the option is a lowercase letter L and not the number 1.

Use of the `-l` option changes the language attribute in the ams.cfg file. The language specified becomes the new PC language, used whenever SPM is started without the `-l` option.

Console Window Language

By default, the language used in the console simulation window is the language specified in the ams.cfg file; however, you can select a different language for this window for the duration of the current session.

To select a different language for the current session, follow the steps below.

▶ **1. At the SPM Main Menu, press F10 to select Language.**

```
    SPM Main Menu
Menu: Select Function
Sys Program     Maintenance
Backup          Restore
Boards          Pass-Thru
Print Opts      Password
Monitor         Language
```

F10

▶ **2. Press the function key that corresponds to your language selection.**

```
Display Language
Make a Selection:
F1  English
F2  French
F3  Spanish

    Exit
```

The Display Language screen reappears, with the language you selected.

▶ **3. Press F5 to return to the SPM Main Menu or select another language.**

Maintenance

CAUTION:
This option is for use by qualified technicians only. Maintenance procedures are provided in the documentation for qualified technicians. See "Related Documents" in "About This Book."

CAUTION:
This is a password-protected option and is for use by your technical support organization only.

Pass-Thru

The Pass-Thru option allows qualified service personnel to program IS II/III* applications on a remote PC. It permits you to establish a remote connection with the control unit to which the IS II/III PC is directly connected. Figure 2–7 illustrates the relationship of the SPM PC, the communications system control unit, and the IS II/III PC.

* No longer orderable.

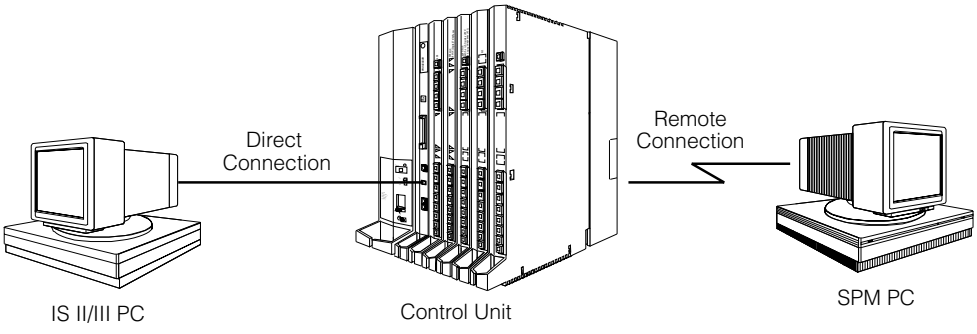

Figure 2–7. Pass-Thru

A Pass-Thru request must be initiated at a DOS PC; it is not available from a UNIX System PC; that is, Pass-Thru cannot be established between two IS II/III PCs. The local admin PC must be in an idle state.

A Pass-Thru request to a locally-connected IS II/III system causes the modem to fall back to 1200 bps if the speed is set to 2400 bps and the modem call to the control unit is at 1200 bps. If necessary, the communications system adjusts its speed to that of the local SPM PC.

Once the Pass-Thru connection is established, you can program in any of the following IS II/III applications from your SPM PC:

- AUDIX Voice Power™*
- Call Accounting System†
- Fax Attendant System® (IS III only)*
- CONVERSANT Intro® (IS III only)*

NOTE:
You cannot program the SPM application on the IS II/III PC because the remote call (from your SPM PC) uses the IS II/III PC's COM1 port; therefore, the system programming jack cannot be used for system programming. For the same reason, a user at the IS II/III PC end of the connection cannot use SPM while your Pass-Thru is in effect. If use of SPM is attempted, the user at the IS II/III end sees the following message:

```
PRE-EMPT IN PROGRESS
Please try again.
```

* No longer orderable.

† Orderable only as an upgrade to existing CAS installations.

To initiate Pass-Thru, establish a modem connection between the SPM PC and the control unit.

If the IS II/III PC does not respond to the Pass-Thru request from the control unit (for example, because the PC is turned off), you see the following message:

```
Pass-thru failed.
Please try again.
```

If the connection between the control unit and the IS II/III PC fails, the connection between the control unit and the SPM PC is dropped. You see the following message:

```
Pass-through Session
unexpectedly terminated.
Please press Enter
to continue.
```

When you press [Enter↵] you return to the SPM Main Menu.

Follow the steps below to initiate the Pass-Thru.

▶ **1. At the SPM Main Menu, press [F8] to select** Pass-Thru**.**

```
    SPM Main Menu
Menu: Select Function
Sys Program     Maintenance
Backup          Restore
Boards          Pass-Thru
Print Opts      Password
Monitor         Language
```

[F8]

The display area changes to 24-lines by 80-characters, which is much larger than the display area on the console simulation window (7-lines by 24-characters).

▶ **2. Type your login name, and press [Enter↵].**

```
Welcome to
IS-II/III

login:
```

▶ **3. Type the IS II/III password, and press [Enter↵].**

```
Password:
```

▶ **4. Type *ams* for the terminal emulation type, and press Enter↵.**

```
Unix disk usage
information

Term=
```

- If you are working with IS II, the IS II main menu appears.
- If you are working with IS III, the system prompts you for your login registration. After you enter your login and press Enter↵, the IS III main menu appears.

▶ **5. To exit from IS II/III programming, press F5 (Exit).**

The system prompts you for confirmation that you want to exit. After confirmation the following message appears.

```
Returning to SPM
```

Password

The Password option is used by qualified service personnel to change the modem connection password. A password is always required to establish a connection with the built-in modem. The password always consists of seven characters. You can perform remote system programming only if you enter the password correctly. A default password is set at the factory. You must obtain this password from your system consultant (SC).

Follow the steps below to change the modem connection password.

▶ **1. At the SPM Main Menu, press F9 to select Password.**

```
    SPM Main Menu
Menu: Select Function
Sys Program     Maintenance
Backup          Restore
Boards          Pass-Thru
Print Opts      Password
Monitor         Language
```

F9

▶ **2. Type the old (current) password. Do not press [Enter↵].**

```
Password:
Enter Old Password
```

If you type the old password incorrectly, the bottom of the screen displays the message `Not Equal`. Repeat Step 2. If you fail to enter the password correctly after three attempts, the bottom of the screen displays the message *`Old Password in Use`* and the procedure terminates. Press [Enter↵] to return to the SPM Main Menu.

▶ **3. Type the new password (any seven characters). Do not press [Enter↵].**

```
Password
Enter New Password
```

The password does not appear on the screen as you type it.

SECURITY ALERT:
Always use the longest length password allowed on the system.

Passwords should consist of a random, non-repetitive, hard-to-guess sequence of characters.

▶ **4. Type the new password again. Do not press [Enter↵].**

```
Password
Enter New Password again



New Password in use
```

▶ **5. Press [F5] to return to the SPM Main Menu.**

Print Options

The Print Opts option allows qualified service personnel to direct the output of system programming reports either to the PC (where you can save them, browse through them, or print them with the system programming Print option) or to the SMDR printer.

Follow the procedure below to direct the output of the system programming reports.

▶ **1. At the SPM Main Menu, press F4 to select Print Opts.**

```
     SPM Main Menu
Menu: Select Function
Sys Program      Maintenance
Backup           Restore
Boards           Pass-Thru
Print Opts       Password
Monitor          Language
```

F4

▶ **2. Select the target device for the reports.**

```
Printer Options
Make a selection
SMDR Port
PC Port


Exit
```

F1
F2

▶ **3. Press F5 to return to the SPM Main Menu.**

SMDR Port Output

See "Printing System Reports" on page 3–613 for more information about the print procedure using the system console and the SMDR port.

PC Port Output

See "Printing Reports" on page 2–54 for more information about the print procedure using SPM and the PC port.

Restore

The Restore option allows qualified service personnel to load system programming from either a disk or from the hard disk into the processor module memory.

This procedure is used either to program a new system if a disk was created through surrogate mode programming, or to restore information (using a backup disk) lost through system failure. It is also part of the upgrade procedure.

Considerations

Review the following items before you begin the restore procedure:

- The system will be forced idle during a restore procedure.
- You must have a backup file containing system programming before you use this procedure. See “Backup” on page 27.
- Features that were not programmed when the backup file was created are reset to factory settings.
- The data restored reflects the number of extensions and lines available on the system at the time the backup was created. The remaining extensions and lines are set to the factory settings that are initialized during a Restart (cold start).
- Restore is terminated under the following conditions:
  - If fewer boards are listed on the backup disk than on the control unit
  - If any real board is out of sequence with the boards listed on the backup disk
  - If phantom boards are not listed last
  - If the operating mode of the system being restored is Hybrid/PBX, but the control unit processor module has been modified to operate only in Key mode
- A successful restore is followed automatically by a Restart (cold start).

WARNING:
An unsuccessful or terminated restore results in a System Erase (frigid start). All calls are dropped. The system configuration is erased. All system programming is lost and the system returns to the factory settings. If the restore is being done remotely, the connection is dropped immediately. If this happens, attempt to reconnect to the control unit and immediately perform another restore. If this is not successful, programming must be restored on site.

Follow the steps below to perform a restore.

▶ **1. At the SPM Main Menu, press F7 to select Restore.**

```
    SPM Main Menu
Menu: Select Function
Sys Program     Maintenance
Backup          Restore
Boards          Pass-Thru
Print Opts      Password
Monitor         Language
```

F7

▶ **2. Follow the instructions for a floppy or a hard disk.**

A second window appears which displays the GOTO FLOPPY option and a directory listing for C:\spm\backup.

- If you are performing a Restore with a file saved on a floppy disk, go to Step 3.
- If you are performing a Restore with a file saved on the hard disk, go to Step 4.

▶ **3. Use the arrow keys to highlight GOTO FLOPPY and press Enter↵.**

```
Make a selection for
the RESTORE file.

If upgrading, convert
files before restoring.

Press ESC to Abort.
```

```
GOTO FLOPPY
backup.ams
file.1
file.2
```

After you press Enter↵, the GOTO FLOPPY statement shown above changes to GOTO HARD DISK. Go to Step 5.

▶ 4. Specify the filename from which to restore.

- To select the default backup filename, use the arrow keys to highlight backup.ams and press [F10][Enter↵].
- If you used a different backup filename, use the arrow keys to select one of the other filenames and press [Enter↵].

  If the file you select is not in the same format as the communications system, the screen below appears. Press [Enter↵] to return to the SPM Main Menu. See "Convert" on page 2–36 for details about converting a backup file.

```
File must be converted
before restoring.

Please press Enter
to see the main menu:
```

▶ 5. Observe the restore progress screen.

```
Press CTRL-F5 to Abort
Est. total time: xx min

filename
RESTORE IN PROGRESS
Blocks Sent   Remaining
    xxxx         xxxx
```

xx = approximate number of minutes
filename = name entered in Step 4
xxxx = number of blocks

To abort the restore, press [Ctrl]+[F5]. You are returned to the SPM Main Menu.

▶ 6. When the restore completes, press [Enter↵] to return to the SPM Main Menu.

```
Restore successful.
Please press Enter
to see the Main Menu




Sent xxxx Blocks
```

xxxx = number of blocks sent

System Programming

A primary function of SPM is to provide a method for programming the communications system. The Sys Program option gives you access to all of the system programming features available from the system programming console.

Basic Programming Information

To begin programming, you must perform one of the following to display the System Programming menu on the MLX-20L console or PC:

On the console:	**Menu**→Sys Program →Exit
On the PC:	Type *spm*→[Enter↵]→*Press any key*→[F1]→[F5]

In most cases, you can press Exit or [F5] to exit from a screen without making any changes. Exceptions to this are noted as part of a procedure. When you complete a procedure and press Exit ([F5]), you usually move up one screen in the menu hierarchy. Occasionally, when you press Exit ([F5]), you return to the previous screen. *In a few cases,* pressing Exit brings you back to the System Programming menu, where you can select another option to program or exit from system programming.

To complete a procedure and save the information you have programmed, press Enter ([F10]).

If you are programming a group of sequentially numbered extensions or trunks, you may have the option of pressing Next ([F8]). This saves your entry and automatically provides the number of the next extension or trunk in the sequence, thus saving you a couple of steps. If Next displays on the screen, you can use it with the current option.

In most cases, you will be at an intermediate step in the procedure you have just completed. At that point, you can select one of the options shown on the screen and continue programming, or you can press Exit ([F5]) again. This usually takes you back to the System Programming menu. If not, you again can continue programming on the current screen or press Exit ([F5]) again.

Idle States

A few of the programming procedures can be started only when the entire system or some part of it, such as a trunk or an extension, is idle (not in use). Some procedures require that the trunk or extension be idle only at the instant of programming. Other procedures, which take longer, require the system, trunk, or extension to be forced to remain idle until programming is completed. These procedures wait for the system, trunk, or extension to become idle and then prevent the initiation of any new calls. This condition is called *forced idle.*

NOTE:
If a procedure requires an idle condition, perform the programming outside of normal business hours.

If a procedure requires that the system be in an idle state and the system is busy when you begin, you see the screen shown below.

```
System Busy   Pls Wait

Dial Code:    nnnn
Slot/Port:    ss/pp



Exit
```

The screen changes to the appropriate programming screen when the system is no longer busy.

System Forced Idle

When the entire system is forced idle, no calls can be made or received. The procedures listed below can be performed only when the entire system (every line and every extension) is idle:

- Select system mode
- Identify system operator positions
- Renumber boards
- Renumber system
- Identify telephones with voice signal pairs for the Voice Announce to Busy feature
- Identify telephones that need the Simultaneous Voice and Data feature
- Restore system programming information
- Identify the Music On Hold jack

When the system is forced idle, the following occurs: Multiline telephone users hear a reminder tone that indicates the telephone cannot be used; display telephone users see the message `Wait: System Busy`; single-line telephone users do not hear a dial tone.

Line or Trunk Idle

Since these procedures require the line or trunk to be idle *only* at the instant of programming, the line or trunk is not forced idle. The following procedures can be performed only when the line or trunk being programmed is idle:

- Identify loudspeaker paging line jack
- Assign trunks to pools
- Specify incoming or outgoing DID- or tie-trunk type
- Specify tie-trunk direction
- Specify tie-trunk E&M signal

Extension Forced Idle

When an extension is forced idle, no calls can be made or received on that extension. The following procedures can be performed only when the extension being programmed is idle:

- Assign call restrictions
- Assign pool dial-out restrictions
- Copy extension assignments
- Assign lines, trunks, or pools to extensions
- Assign labels to a personal directory
- Use centralized telephone programming

When the extension is forced idle, the following occurs: Multiline telephone users hear a reminder tone that indicates the telephone cannot be used; display telephone users see the message `Wait: System Busy`; single-line telephone users do not hear a dial tone.

Forced Idle Reminder Tone

The forced idle reminder tone is a high-low “door-phone” tone — 400 ms of 667 Hz tone followed by 400 ms of 571 Hz tone. The tone is provided under the following circumstances:

- At the extension, to remind the user that the system or the extension is in the forced idle state
- At the programming console or at a PC running SPM, to remind the system manager that the system (or at least one extension) is in the forced idle state because of administrative activity

In Release 1.1 and higher of the communications system, forced idle reminder tones occur every 20 seconds. You can adjust the volume of these tones with the volume control on the system console.

Accessing System Programming

Follow the steps below to access system programming.

▶ **1. At the SPM Main Menu, press F1 to select Sys Program.**

```
     SPM Main Menu
Menu: Select Function
F1  Sys Program     Maintenance
    Backup          Restore
    Boards          Pass-Thru
    Print Opts      Password
    Monitor         Language
```

▶ **2. Press the function key next to the option you want.**

```
    System Programming:     >
    Make a selection
F1  System          Extensions   F6
F2  SysRenumber     Options      F7
F3  Operator        Tables       F8
F4  LinesTrunks     AuxEquip     F9
F5  Exit            NightSrvce   F10
```

```
    System Programming:
    Make a selection
F1  Labeling        Language     F6
F2  Data
F3  Print
F4  Cntr-Prg
F5  Exit
```

If the option you want does not appear on the first screen of the System Programming menu, press PgUp to display the second screen of the menu.

Printing Reports

Use the following procedure to print system reports using SPM at the PC. The SPM Print Opts must be set to PC Port. See "Print Options" on page 2–47 for details about setting the printer output port.

▶ **1. At the second page of the System Programming menu, press F3 to select Print.**

```
    System Programming:     >
    Make a selection
F1  Labeling
F2  Data
F3  Print
F4  Cntr-Prg
F5  Exit
```

▶ **2. Press the function key that corresponds to the report to be printed.**

```
Print (English   ):      >
Make a selection
F1  All              Trunk Info   F6
F2  SysSet-up        T1 Info      F7
F3  Dial Plan        Pri Info     F8
F4  Labels           RmoteAccess  F9
F5  Exit             Oper Info    F10
```

▶ **3. Use one of the methods shown after this procedure to print the report(s).**

```
Please enter file name
     to store print
(default is print.ams)


Press Esc to Abort.
```

```
LPT1:
GOTO FLOPPY
MAKE NEW FILE
PRINT.AMS
```

▶ **4. Observe the print status screen.**

```
Print in Progress ...
F5  Exit
```

You can press F5 to interrupt printing and return to the SPM Main Menu.

Print Hard Copy

To print a hard copy of the report, use the arrow keys to highlight LPT1: and press Enter↵.

Print to Hard Disk

To print the reports to the hard disk if the print file does not exist, use the arrow keys to highlight MAKE NEW FILE and press Enter↵.

- To save to the default print filename (print.ams), press Enter↵.
- To save to the filename of your choice, type [*filename*] and press Enter↵.

To print the reports to the hard disk if the print file already exists, use the arrow keys to highlight the filename and press Enter↵.

Print to Floppy Disk

Use the arrow keys to highlight GOTO FLOPPY: and press Enter. Use one of the methods shown below.

- To print the reports to a floppy disk if the print file does not exist, use the arrow keys to highlight MAKE NEW FILE and press Enter.
  - — To save to the default print filename (print.ams), press Enter.
  - — To save to the filename of your choice, type [*filename*] and press Enter.
- To print the reports to a floppy disk if the print file already exists, use the arrow keys to highlight the filename and press Enter.

Upgrading the System

WARNING:
The following procedures are to be used by qualified technicians or service personnel only. Installation or maintenance of this product by anyone other than qualified personnel may damage or impair the product; your limited warranty does not cover such damage. For details, see your limited warranty in Appendix A "Customer Support Information" in the back of this book.

Hazardous electrical voltages are present inside this product.

This section describes upgrading your communications system to Release 6.1. You can use this procedure to perform the following upgrades:

- From Release 1.0 to Release 6.1
- From Release 1.1 to Release 6.1
- From Release 2.0 to Release 6.1
- From Release 2.1 to Release 6.1
- From Release 3.0 to Release 6.1
- From Release 3.1 to Release 6.1
- From Release 4.0 to Release 6.1
- From Release 4.1 to Release 6.1
- From Release 4.2 to Release 6.1
- From Release 5.0 to Release 6.1
- From Release 6.0 to Release 6.1

MERLIN II Communications System programming cannot be upgraded to this communications system. The new communications system must be completely reprogrammed.

Before You Begin

Before you begin the upgrade to Release 6.1, you will need the items listed below.

- Any version of SPM to backup system programming information.
- SPM Version 6.25 or later to convert and restore system programming information.

NOTES:

1. If SPM is already installed, the `Welcome to SPM` screen that appears when you start SPM identifies the version on both the last line of the console simulation window and in the upper left corner of the screen. If you are working with Version 6.25, `V6` appears in the upper left-hand corner of the screen and `Version 6.25` appears on the last line of the console simulation window.
2. The version of SPM packaged with Intuity does not support conversion. The most current version of SPM is available for download from NSAC.

- A processor module with a PCMCIA memory card slot (if one is not already installed in the system).
- An R6.1 Forced Installation PCMCIA Memory Card.

NOTE:
If a new processor module is installed as part of the upgrade procedure, the system software is already installed. The R6.1 Forced Installation memory card is only required if upgrading a system and the processor module is not replaced.

Inter-Release Compatibility

It is important to understand compatibility between files created on each of the different versions of SPM, not only for upgrading but also for programming.

Table 2–6 summarizes programming compatibility. (It is assumed that the majority of the programming is done in surrogate mode and backed up on disk).

Table 2–6. Programming Compatibility

SPM Version	Program Backup from	Restore on									
		1.0	1.1	2.0/2.1	3.0	3.1	4.0	4.1/4.2	5.0	6.0	6.1
1.13	1.0	yes	no	no	no	no	no	no	no	no	no
1.16	1.0	yes	yes	no	no	no	no	no	no	no	no
2.09	1.0	yes	yes	yes*	no	no	no	no	no	no	no
2.16	1.0	yes	yes	yes*	no	no	no	no	no	no	no
3.18	1.0	yes	yes	yes*	yes*	yes*	no	no	no	no	no
4.15	1.0	yes	yes	yes*	yes*	yes*	yes*	no	no	no	no
4.25	1.0	yes	yes	yes*	yes*	yes*	yes*	yes*	no	no	no
5.15	1.0	yes	yes	yes*	yes*	yes*	yes*	yes*	yes*	no	no
6.15	1.0	yes	yes	yes*	yes*	yes*	yes*	yes*	yes*	yes*	no
6.25	1.0	yes	yes	yes*	yes*	yes*	yes*	yes*	yes*	yes*	yes*
1.16	1.1	no	yes	no	no	no	no	no	no	no	no
2.09	1.1	no	yes	yes*	no	no	no	no	no	no	no
2.16	1.1	no	yes	yes*	no	no	no	no	no	no	no
3.18	1.1	no	yes	yes*	yes*	yes*	no	no	no	no	no
4.15	1.1	no	yes	yes*	yes*	yes*	yes*	no	no	no	no
4.25	1.1	no	yes	yes*	yes*	yes*	yes*	yes*	no	no	no
5.15	1.1	no	yes	yes*	yes*	yes*	yes*	yes*	yes*	no	no
6.15	1.1	no	yes	yes*	yes*	yes*	yes*	yes*	yes*	yes*	no
6.25	1.1	no	yes	yes*	yes*	yes*	yes*	yes*	yes*	yes*	yes*
2.09	2.0	no	no	yes	no	no	no	no	no	no	no
2.16	2.0	no	no	yes	no	no	no	no	no	no	no
3.18	2.0	no	no	yes	yes*	yes*	no	no	no	no	no
4.15	2.0	no	no	yes	yes*	yes*	yes*	no	no	no	no
4.25	2.0	no	no	yes*	yes*	yes*	yes*	yes*	no	no	no
5.15	2.0	no	no	yes*	yes*	yes*	yes*	yes*	yes*	no	no
6.15	2.0	no	no	yes*	yes*	yes*	yes*	yes*	yes*	yes*	no
6.25	2.0	no	no	yes*	yes*	yes*	yes*	yes*	yes*	yes*	yes*
2.16	2.1	no	no	no	no	no	no	no	no	no	no
3.18	2.1	no	no	no	yes*	yes*	no	no	no	no	no
4.15	2.1	no	no	no	yes*	yes*	yes*	no	no	no	no
4.25	2.1	no	no	no	yes*	yes*	yes*	yes*	no	no	no
5.15	2.1	no	no	no	yes*	yes*	yes*	yes*	yes*	no	no
6.15	2.1	no	no	no	yes*	yes*	yes*	yes*	yes*	yes*	no
6.25	2.1	no	no	no	yes*	yes*	yes*	yes*	yes*	yes*	yes*

Continued on next page

Table 2–6. Programming Compatibility *(Continued)*

SPM Version	Program Backup from	Restore on									
		1.0	1.1	2.0/2.1	3.0	3.1	4.0	4.1/4.2	5.0	6.0	6.1
3.18	3.0	no	no	no	no	no	no	no	no	no	no
4.15	3.0	no	no	no	no	no	yes*	no	no	no	no
4.25	3.0	no	no	no	no	no	yes*	yes*	no	no	no
5.15	3.0	no	no	no	no	no	yes*	yes*	yes*	no	no
6.15	3.0	no	no	no	no	no	yes*	yes*	yes*	yes*	no
6.25	3.0	no	no	no	no	no	yes*	yes*	yes*	yes*	yes*
3.18	3.1	no	no	no	no	no	no	no	no	no	no
4.15	3.1	no	no	no	no	no	no	no	no	no	no
4.25	3.1	no	no	no	no	yes	yes*	yes*	no	no	no
5.15	3.1	no	no	no	no	yes	yes*	yes*	yes*	no	no
6.15	3.1	no	no	no	no	yes	yes*	yes*	yes*	yes*	no
6.25	3.1	no	no	no	no	yes	yes*	yes*	yes*	yes*	yes*
4.15	4.0	no	no	no	no	no	yes	no	no	no	no
4.25	4.0	no	no	no	no	no	yes	yes*	no	no	no
5.15	4.0	no	no	no	no	no	yes	yes*	yes*	no	no
6.15	4.0	no	no	no	no	no	yes	yes*	yes*	yes*	no
6.25	4.0	no	no	no	no	no	yes	yes*	yes*	yes*	yes*
4.25	4.1/4.2	no	no	no	no	no	no	yes	no	no	no
5.15	4.1/4.2	no	no	no	no	no	no	yes	yes*	no	no
6.15	4.1/4.2	no	no	no	no	no	no	yes	yes*	yes*	no
6.25	4.1/4.2	no	no	no	no	no	no	yes	yes*	yes*	yes*
5.15	5.0	no	no	no	no	no	no	no	yes	no	no
6.15	5.0	no	no	no	no	no	no	no	yes	yes*	no
6.25	5.0	no	no	no	no	no	no	no	yes	yes*	yes*
6.15	6.0	no	no	no	no	no	no	no	no	yes	no
6.25	6.0	no	no	no	no	no	no	no	no	yes	yes*
6.25	6.1	no	no	no	no	no	no	no	no	no	yes

* The backup file must be converted before it is restored.

NOTE:
The default barrier code and any programmed barrier codes from Release 2.1 and earlier are carried over to Release 3.0 and later with no change, and the barrier code length is four (4). It is the responsibility of the system manager to change the barrier code length and the barrier codes, if so desired.

Upgrade Procedure

NOTE:
The system upgrade procedure must follow the order of the steps shown below.

1. Back up your system programming.

This step creates a file containing system programming information. See "Backup" on page 27. Any version of SPM may be used to back up system programming.

2. Install SPM.

You must have Version 6.25 of SPM to upgrade the system to Release 6.1. If Version 6.25 of SPM is already installed on your system, proceed to Step 3.

If Version 6.25 of SPM is not already installed on your system, install (or upgrade to) Version 6.25 of SPM. See "Installing the SPM Software" on page 3.

3. Convert your backup file.

This step converts the backup file created in Step 1. Refer to Table 2–6 to determine if the backup file needs to be converted to Release 6.1 format.

- If not required, continue with the next step.
- If required, convert the backup file. See "Convert" on page 2–36, then continue with the next step.

4. Turn off AC power switches on the control unit in the following order:

1. Basic carrier
2. Expansion carrier 1, if present
3. Expansion carrier 2, if present

5. If the system already has a processor module with a PCMCIA memory card slot installed, proceed to Step 6. Otherwise, continue with this step to replace the processor module.

1. Unplug the interface cords from the SPM and SMDR printer ports on the processor module.
2. Remove the processor module from Slot 0.
3. Install the new processor module in Slot 0.
4. Plug the interface cords into the SPM and SMDR printer ports on the processor module.

▶ **6. If a new processor module was installed in Step 5, proceed to Step 7. Otherwise, insert the R6.1 forced installation memory card into the PCMCIA memory card slot on the processor module.**

NOTE:
Using the forced installation memory card will cause a frigid start.

▶ **7. Turn on the AC power switches on the control unit in the following order:**

1. Expansion carrier 2, if present
2. Expansion carrier 1, if present
3. Basic carrier

▶ **8. Restore your system programming.**

The system is forced idle and cannot be used during this procedure.
See "Restore" on page 48.

▶ **9. Program new features.**

If you wish to use the factory settings for the new features available with Release 6.1, skip this step.

NOTE:
When upgrading from a networked Release 6.0 system, the non-local dial plan extension ranges must be programmed to suit the customer's configuration.

See the following tables, which follow this list:

- **Table 2–7.** Lists the features added with Release 1.1 of the communications system.
- **Table 2–8.** Lists the features added with Release 2.0 or 2.1 of the communications system.
- **Table 2–9.** Lists the features added with Release 3.0 of the communications system.
  - — When you upgrade from Release 2.0 or 2.1 to Release 3.0, you must program these features as the last step of the upgrade procedure.
  - — When you upgrade from Release 1.1 to Release 3.0, you must program the features listed in Table 2–8, then the features listed in Table 2–9.
  - — When you upgrade from Release 1.0 to Release 3.0, you must first program the features listed in Table 2–7, then the features listed in Table 2–8, then the features listed in Table 2–9.

- **Table 2–10.** Lists the features added with Release 3.1 of the communications system.
  - When you upgrade from Release 3.0 to Release 3.1, you must program these features as the last step of the upgrade procedure.
  - When you upgrade from Release 2.0 or 2.1 to Release 3.1, you must program the features listed in Table 2–9, then the features listed in Table 2–10.
  - When you upgrade from Release 1.1 to Release 3.1, you must program the features listed in Table 2–8, then the features listed in Table 2–9, then the features listed in Table 2–10.
  - When you upgrade from Release 1.0 to Release 3.1, you must first program the features listed in Table 2–7, then the features listed in Table 2–8, then the features listed in Table 2–9, then the features listed in Table 2–10.
- **Table 2–11.** Lists the features added with Release 4.0 of the communications system.
  - When you upgrade from Release 3.1 to Release 4.0, you must program these features as the last step of the upgrade procedure.
  - When you upgrade from Release 3.0 to Release 4.0, you must program the features listed in Table 2–10, then the features listed in Table 2–11.
  - When you upgrade from Release 2.0 or 2.1 to Release 4.0, you must program the features listed in Table 2–9, then the features listed in Table 2–10, then the features listed in Table 2–11.
  - When you upgrade from Release 1.1 to Release 4.0, you must program the features listed in Table 2–8, then the features listed in Table 2–9, then the features listed in Table 2–10, then the features listed in Table 2–11.
  - When you upgrade from Release 1.0 to Release 4.0, you must first program the features listed in Table 2–7, then the features listed in Table 2–8, then the features listed in Table 2–9, then the features listed in Table 2–10, then the features listed in Table 2–11.
- **Table 2–12.** Lists the features added with Release 4.1 of the communications system.
  - When you upgrade from Release 4.0 to Release 4.1, you must program the features listed in Table 2–12.
  - When you upgrade from Release 3.1 to Release 4.1, you must program the features listed in Table 2–11, then the features listed in Table 2–12.
  - When you upgrade from Release 3.0 to Release 4.1, you must program the features listed in Table 2–10, then the features listed in Table 2–11, then the features listed in Table 2–12.

— When you upgrade from Release 2.0 or 2.1 to Release 4.1, you must program the features listed in Table 2–9, then the features listed in Table 2–10, then the features listed in Table 2–11, then the features listed in Table 2–12.

— When you upgrade from Release 1.1 to Release 4.1, you must program the features listed in Table 2–8, then the features listed in Table 2–9, then the features listed in Table 2–10, then the features listed in Table 2–11, then the features listed in Table 2–12.

— When you upgrade from Release 1.0 to Release 4.1, you must first program the features listed in Table 2–7, then you must program the features listed in Table 2–8, then the features listed in Table 2–9, then the features listed in Table 2–10, then the features listed in Table 2–11, then the features listed in Table 2–12.

- **Table 2–13.** Lists the features added with Release 4.2 of the communications system.

  — When you upgrade from Release 4.1 to Release 4.2, you must program the features listed in Table 2–13.

  — When you upgrade from Release 4.0 to Release 4.2, you must program the features listed in Table 2–12, then the features listed in Table 2–13, then the features listed in Table 2–14.

  — When you upgrade from Release 3.1 to Release 4.2, you must program the features listed in Table 2–11, then the features listed in Table 2–12, then the features listed in Table 2–13.

  — When you upgrade from Release 3.0 to Release 4.2, you must program the features listed in Table 2–10, then the features listed in Table 2–11, then the features listed in Table 2–12, then the features listed in Table 2–13.

  — When you upgrade from Release 2.0 or 2.1 to Release 4.2, you must program the features listed in Table 2–9, then the features listed in Table 2–10, then the features listed in Table 2–11, then the features listed in Table 2–12, then the features listed in Table 2–13.

  — When you upgrade from Release 1.1 to Release 4.2, you must program the features listed in Table 2–8, then the features listed in Table 2–9, then the features listed in Table 2–10, then the features listed in Table 2–11, then the features listed in Table 2–12, then the features listed in Table 2–13.

  — When you upgrade from Release 1.0 to Release 4.2, you must first program the features listed in Table 2–7, then you must program the features listed in Table 2–8, then the features listed in Table 2–9, then the features listed in Table 2–10, then the features listed in Table 2–11, then the features listed in Table 2–12, then the features listed in Table 2–13.

- **Table 2–14.** Lists the features added with Release 5.0 of the communications system.
  - When you upgrade from Release 4.2 to Release 5.0, you must program the features listed in Table 2–14.
  - When you upgrade from Release 4.1 to Release 5.0, you must program the features listed in Table 2–13, then the features listed in Table 2–14.
  - When you upgrade from Release 4.0 to Release 5.0, you must program the features listed in Table 2–12, then the features listed in Table 2–13, then the features listed in Table 2–14.
  - When you upgrade from Release 3.1 to Release 5.0, you must program the features listed in Table 2–11, then the features listed in Table 2–12, then the features listed in Table 2–13, then the features listed in Table 2–14.
  - When you upgrade from Release 3.0 to Release 5.0, you must program the features listed in Table 2–10, then the features listed in Table 2–11, then the features listed in Table 2–12, then the features listed in Table 2–13, then the features listed in Table 2–14.
  - When you upgrade from Release 2.0 or 2.1 to Release 5.0, you must program the features listed in Table 2–9, then the features listed in Table 2–10, then the features listed in Table 2–11, then the features listed in Table 2–12, then the features listed in Table 2–13, then the features listed in Table 2–14.
  - When you upgrade from Release 1.1 to Release 5.0, you must program the features listed in Table 2–8, then the features listed in Table 2–9, then the features listed in Table 2–10, then the features listed in Table 2–11, then the features listed in Table 2–12, then the features listed in Table 2–13, then the features listed in Table 2–14.
  - When you upgrade from Release 1.0 to Release 5.0, you must first program the features listed in Table 2–7, then you must program the features listed in Table 2–8, then the features listed in Table 2–9, then the features listed in Table 2–10, then the features listed in Table 2–11, then the features listed in Table 2–12, then the features listed in Table 2–13, then the features listed in Table 2–14.
- **Table 2–15.** Lists the features added with Release 6.0 of the communications system.
  - When you upgrade from Release 5.0 to Release 6.0, you must program the features listed in Table 2–15.
  - When you upgrade from Release 4.2 to Release 6.0, you must program the features listed in Table 2–14, then the features listed in Table 2–15.
  - When you upgrade from Release 4.1 to Release 6.0, you must program the features listed in Table 2–13, then the features listed in Table 2–14, then the features listed in Table 2–15.

— When you upgrade from Release 4.0 to Release 6.0, you must program the features listed in Table 2–12, then the features listed in Table 2–13, then the features listed in Table 2–14, then the features listed in Table 2–15.

— When you upgrade from Release 3.1 to Release 6.0, you must program the features listed in Table 2–11, then the features listed in Table 2–12, then the features listed in Table 2–13, then the features listed in Table 2–14, then the features listed in Table 2–15.

— When you upgrade from Release 3.0 to Release 6.0, you must program the features listed in Table 2–10, then the features listed in Table 2–11, then the features listed in Table 2–12, then the features listed in Table 2–13, then the features listed in Table 2–14, then the features listed in Table 2–15.

— When you upgrade from Release 2.0 or 2.1 to Release 6.0, you must program the features listed in Table 2–9, then the features listed in Table 2–10, then the features listed in Table 2–11, then the features listed in Table 2–12, then the features listed in Table 2–13, then the features listed in Table 2–14, then the features listed in Table 2–15.

— When you upgrade from Release 1.1 to Release 6.0, you must program the features listed in Table 2–8, then the features listed in Table 2–9, then the features listed in Table 2–10, then the features listed in Table 2–11, then the features listed in Table 2–12, then the features listed in Table 2–13, then the features listed in Table 2–14, then the features listed in Table 2–15.

— When you upgrade from Release 1.0 to Release 6.0, you must program the features listed in Table 2–7, then the features listed in Table 2–8, then the features listed in Table 2–9, then the features listed in Table 2–10, then the features listed in Table 2–11, then the features listed in Table 2–12, then the features listed in Table 2–13, then the features listed in Table 2–14, then the features listed in Table 2–15.

- **Table 2–16.** Lists the features added with Release 6.1 of the communications system.

  — When you upgrade from Release 6.0 to Release 6.1, you must program the features listed in Table 2–16.

  — When you upgrade from Release 5.0 to Release 6.1, you must program the features listed in Table 2–15, then the features listed in Table 2–16.

  — When you upgrade from Release 4.2 to Release 6.1, you must program the features listed in Table 2–14, then the features listed in Table 2–15, then the features listed in Table 2–16.

  — When you upgrade from Release 4.1 to Release 6.1, you must program the features listed in Table 2–13, then the features listed in Table 2–14, then the features listed in Table 2–15, then the features listed in Table 2–16.

— When you upgrade from Release 4.0 to Release 6.1, you must program the features listed in Table 2–12, then the features listed in Table 2–13, then the features listed in Table 2–14, then the features listed in Table 2–15, then the features listed in Table 2–16.

— When you upgrade from Release 3.1 to Release 6.1, you must program the features listed in Table 2–11, then the features listed in Table 2–12, then the features listed in Table 2–13, then the features listed in Table 2–14, then the features listed in Table 2–15, then the features listed in Table 2–16.

— When you upgrade from Release 3.0 to Release 6.1, you must program the features listed in Table 2–10, then the features listed in Table 2–11, then the features listed in Table 2–12, then the features listed in Table 2–13, then the features listed in Table 2–14, then the features listed in Table 2–15, then the features listed in Table 2–16.

— When you upgrade from Release 2.0 or 2.1 to Release 6.1, you must program the features listed in Table 2–9, then the features listed in Table 2–10, then the features listed in Table 2–11, then the features listed in Table 2–12, then the features listed in Table 2–13, then the features listed in Table 2–14, then the features listed in Table 2–15, then the features listed in Table 2–16.

— When you upgrade from Release 1.1 to Release 6.1, you must program the features listed in Table 2–8, then the features listed in Table 2–9, then the features listed in Table 2–10, then the features listed in Table 2–11, then the features listed in Table 2–12, then the features listed in Table 2–13, then the features listed in Table 2–14, then the features listed in Table 2–15, then the features listed in Table 2–16.

— When you upgrade from Release 1.0 to Release 6.1, you must program the features listed in Table 2–7, then the features listed in Table 2–8, then the features listed in Table 2–9, then the features listed in Table 2–10, then the features listed in Table 2–11, then the features listed in Table 2–12, then the features listed in Table 2–13, then the features listed in Table 2–14, then the features listed in Table 2–15, then the features listed in Table 2–16.

Table 2–7. Programming Needed after Upgrade to Release 1.1

Feature	Sequence
System language	SysProgram→**More**→Language→SystemLang
Extension language	SysProgram→**More**→Language→Extensions
SMDR language	SysProgram→**More**→Language→SMDR
Printer language	SysProgram→**More**→Language→Printer

Table 2–8. Programming Needed after Upgrade to Release 2.0

Feature	Sequence
Primary Rate Interface (PRI)	SysProgram→LinesTrunks→LS/GS/DSL→Type→PRI SysProgram→LinesTrunks→LS/GS/DSL→ FrameFormat SysProgram→LinesTrunks→LS/GS/DSL→Suppression SysProgram→LinesTrunks→PRI→PhoneNumber SysProgram→LinesTrunks→PRI→B-ChannlGrp SysProgram→LinesTrunks→PRI→NumbrToSend SysProgram→LinesTrunks→PRI→Test TelNum SysProgram→LinesTrunks→PRI→Protocol SysProgram→LinesTrunks→PRI→DialPlanRtg SysProgram→LinesTrunks→PRI→OutgoingTbl SysProgram→Tables→ARS
DID Emulation on T1	SysProgram→LinesTrunks→LS/GS/DSL→Type→ **More**→DID/All DID
Night Service Calling Group	SysProgram→NightSrvce→GroupAssign→ Calling Group
Coverage VMS Off	SysProgram→**More**→Cntr-Prg→Program Ext
Data Status	SysProgram→**More**→Cntr-Prg→Program Ext
Extension Copy	SysProgram→**More**→Cntr-Prg→Copy Ext
Posted Message button on MLX-10 nondisplay and analog multiline telephones (for use with Do Not Disturb)	SysProgram→**More**→Cntr-Prg→Program Ext

Table 2–9. Programming Needed after Upgrade to Release 3.0

Feature	Sequence
Automatic Backup	SysProgram→System→Back/Restore→Auto Backup
Incoming Call Line Identification Delay	LinesTrunks→**More**→LS-ID Delay→**Drop**→ Dial trunk no.→Enter
Remote Access Barrier Codes	LinesTrunks→RemoteAccss→BarrierCode→ Code Info→Code Length LinesTrunks→RemoteAccss→BarrierCode→ Code Info→Code Entry
Authorization Codes	Extensions→**More**→Auth Code

Table 2–10. Programming Needed after Upgrade to Release 3.1

Feature	Sequence
Trunk-to-Trunk Transfer	Extensions→**More**→**More**→TrkTransfer→Toggle LED On/Off or Dial ext. no.→Enter→Exit→Exit
Second Dial Tone Timer	Options→**More**→SecDT→Dial second dial tone timer value→Enter

Table 2–11. Programming Needed after Upgrade to Release 4.0

Feature	Sequence
Delayed Call Forwarding	Extensions→**More**→Delay Frwd→Dial ext. no.→Enter→Dial no. of delay rings→Enter
Group Calling Overflow and Thresholds	Extensions→**More**→Grp Calling→Overflow→Dial calling group ext. no.→Enter→Dial ext. no.→Enter→Number Based Overflow→**Drop**→Dial no. of calls→Enter→Time Based Overflow→**Drop**→Dial no. of seconds→Enter
Voice Announce on a QCC	Operator→Queued Call→**More**→Voice Annc→Enabled or Disabled→Enter
2B Data	Data→2B Data→Dial adjunct ext. no.→Enter
Basic Rate Interface (BRI)	LinesTrunks→**More**→BRI→SPID/DN.→Dial line/trunk no.→Enter→**Drop**→Dial SPID→Enter→**Drop**→Dial DN→Enter LinesTrunks→**More**→BRI→Timers→Select timer→**Drop**→Dial no. of seconds or ms→Enter
Clock Synchronization	LinesTrunks→**More**→ClockSync→Primary→**Drop**→Dial slot no.→Enter→Dial port no. OR Select source of synchronization→Enter→Secondary→Dial slot no.→Enter→Dial port no. or Select synchronization source→Enter→Tertiary→Dial slot no.→Enter→Dial port no. or Select source of synchronization→Enter
Ringing Frequency (016 T/R module)	Options→**More**→Ringing Freq→Dial slot no.→Select 20Hz or 25Hz→Enter

Table 2–12. Programming Needed after Upgrade to Release 4.1

Feature	Sequence
Group Coverage Ring Delay	SysProgram→Extensions→**More**→**More**→ Cover Delay→ Group Cover→sender's extension→ number of rings→Enter
Primary Cover Ring Delay	SysProgram→Extensions→**More**→**More**→ Cover Delay→Primary→sender's extension→ number of rings→Enter
Secondary Cover Ring Delay	SysProgram→Extensions→**More**→**More**→ Cover Delay→Secondry→sender's extension→ number of rings→Enter
Night Service Group Line Assignment	SysProgram→NightSrvce→GroupAssign→Lines→ Night Service attendant position number→Enter→ line number→Enter
Night Service Coverage Control	SysProgram→NightSrvce→CoverContrl→ Enable or Disable→Enter
Board Renumber (when an 012 T/R module is replaced by an 016 T/R module)	System→Board Renum→Yes

Continued on next page

Table 2–12. Programming Needed after Upgrade to Release 4.1 *(Continued)*

Feature	Sequence
Switched 56 Data	To select T1 All Tie: Switched 56 Data: LinesTrunks→LS/GS/DSL→Dial slot no.→ Enter→Type→T1→Enter→All TIE→Enter→S56→ Enter→Dial channel no.→Enter→Exit→ Exit→Exit→Exit To select T1 Tie: Switched 56 Data: LinesTrunks→LS/GS/DSL→Dial slot no.→ Enter→Type→T1→Enter→TIE→Enter→S56→ Enter→Dial channel no.→Enter→Exit→ Exit→Exit→Exit To select T1 All: Switched 56 Data: LinesTrunks→LS/GS/DSL→Dial slot no.→Enter→ Type→T1→Enter→**More**→ALL S56 Data→ Enter→Select Direction, Intype, Outtype, AnsSupv, Disconnect, Inmode, or Outmode→ Program options→Enter→Exit→Exit→Exit→Exit To select T1: Switched 56 Data: LinesTrunks→LS/GS/DSL→Dial slot no.→ Enter→ Type→T1→Enter→**More**→S56 Data→ Enter→ Dial channel no.→Enter→Select Direction, Intype, Outtype, AnsSupv, Disconnect, Inmode, or Outmode→ Program options→Enter→Exit→Exit→ Exit→Exit
Switched 56 Data Network Dial Plan Routing	To specify Expected Digits: LinesTrunks→**More**→T1 Data NW→S56 Dial Plan Routing→Expected Digits→**Drop**→Dial expected digits→Enter→Exit→Exit→Exit To specify Delete Digits: LinesTrunks→**More**→T1 Data NW→S56 Dial Plan Routing→Delete Digits→**Drop**→Dial delete digits→Enter→Exit→Exit→Exit To specify Add Digits: LinesTrunks→**More**→T1 Data NW→S56 Dial Plan Routing→Add Digits→**Drop**→Dial add digits→ Enter→Exit→Exit→Exit

Table 2–13. Programming Needed after Upgrade to Release 4.2

Feature	Sequence
SMDR Talk Time	Options→SMDR→Talk Time→Enable or Disable→ Enter→Exit→Exit
PRI Switch Types	To select the Nortel DMS-250 for MCI services: SysProgram→Exit→LinesTrunks→PRI→ SwitchType→Dial slot no.→Enter→DMS-250→Enter To select the Digital Switch Corporation DEX600E for MCI services: SysProgram→Exit→LinesTrunks→PRI→ SwitchType→Dial slot no.→Enter→DEX600E→Enter To select the Nortel DMS-100 for local exchange carrier services: SysProgram→Exit→LinesTrunks→PRI→ SwitchType→Dial slot no.→Enter→DMS-100→ Enter
PRI Network Service	To select MCI Toll services for a DMS-250 or DEX600E switch type: SysProgram→Exit→LinesTrunks→PRI→ B-ChannlGrp→NetworkServ→B-Channel group no.→ Enter→MCI Toll→MCI PRISM, MCI VNET, MCI 800, or MCI 900→Enter To select local exchange carrier services for a DMS-100 switch type: SysProgram→Exit→LinesTrunks→PRI→ B-ChannlGrp→NetworkServ→B-Channel group no.→ Enter→DMS-100Local→DMS-Private or DMS-INWATS or DMS-OUTWATS or DMS-FX or DMS-TieTrk→Enter
PRI Dial Plan Routing	To specify MCI Toll Dial Plan Routing services for a DMS-250 or DEX600E switch type: SysProgram→Exit→LinesTrunks→PRI→ DialPlanRtg→Service→Entry no.→Enter→MCI Toll→MCI PRISM or MCI VNET or MCI 800 or MCI 900→Enter To specify local exchange carrier Dial Plan Routing services for a DMS-100 switch type: SysProgram→Exit→LinesTrunks→PRI→ DialPlanRtg→Service→Entry no.→Enter→DMS-100Local→DMS-Private or DMS-INWATS or DMS-OUTWATS or DMS-FX or DMS-TieTrk→Enter

Continued on next page

Table 2–13. Programming Needed after Upgrade to Release 4.2 *(Continued)*

Feature	Sequence
PRI Call-by-Call Services Table	To select MCI Toll Call-by-Call Services for a DMS-250 or DEX600E switch type: SysProgram→Exit→LinesTrunks→PRI→ OutgoingTbl→CBC Service→NetworkServ→ List no.→Enter→ MCI Toll→MCI PRISM or MCI VNET→Enter To specify local exchange carrier Dial Plan Routing services for a DMS-100 switch type: SysProgram→Exit→LinesTrunks→PRI→ OutgoingTbl→CBC Service→NetworkServ→ List no.→Enter→DMS-100Local→DMS-Private or DMS-OUTWATS or DMS-FX or DMS-TieTrk→Enter

Table 2–14. Programming Needed after Upgrade to Release 5.0

Feature	Sequence
CTI Link	This is a Maintenance step. Start the procedure from the main menu, not the System Programming screen. Busy-out the board first: **Menu**→Maintenance→Slot→Dial slot no.→ Enter→Busy-Out→Yes Program the CTI link (the switch must be in Hybrid/PBX mode): AuxEquip→CTI Link→Dial extension no.→Enter→ Exit→Exit This is a Maintenance step. Start the procedure from the main menu, not the System Programming screen. Restore the slot: **Menu**→Maintenance→Slot→Dial slot no.→ Enter→ Restore→Yes **NOTE:** If the MLX module containing the CTI link is the first module, use the SPM program to busy-out the slot.

Continued on next page

Table 2–14. Programming Needed after Upgrade to Release 5.0 *(Continued)*

Feature	Sequence
Calling Group Alarm Thresholds	Extensions→**More**→Grp Calling→Queue Alarm→ Dial calling group ext. no.→Enter→Alarm Threshold 1, or Alarm Threshold 2 or Alarm Threshold 3→ **Drop**→Dial no. of calls→Enter→Exit→Exit
HotLine	Extensions→**More**→**More**→HotLine→ Dial HotLine ext. no.→Enter→Exit→Exit
Calling Group Hunt Type	Extensions→**More**→Grp Calling→Hunt Type→ Dial calling group ext. no.→Enter→Circular, Linear, or Most Idle→Enter→Exit→Exit→Exit
Group Calling Delay Primary Announcement	Extensions→**More**→Grp Calling→DelayAnnce→ Dial calling group ext. no.→Enter→Primary Announcement→Enter Extension no. of announcement device→Enter (to program another announcement device) or Exit (to end procedure)→Exit
Group Calling Delay Secondary Announcement	Extensions→**More**→Grp Calling→DelayAnnce→ Dial calling group ext. no.→Enter→Secondary Announcement→Dial ext. no. of announcement device→Enter→Exit→Exit
Group Calling Announcement Interval	Extensions→**More**→Grp Calling→DelayAnnce→ Dial calling group ext. no.→Enter→Announcement Interval→Dial announcement interval in seconds→ Enter→Exit→Exit
Group Calling Repeat Announcement	Extensions→**More**→Grp Calling→DelayAnnce→ Dial calling group ext. no.→Enter→Repeat Announcement→Yes or No→Enter→Exit→Exit

Table 2–15. Programming Needed after Upgrade to Release 6.0

Feature	Sequence
UDP Routing Patterns	Sys Program→Tables→UDP Routing→Enter Pattern Number (1-20)→Enter→Enter Route Number (1-4)→ Enter→Pool→Enter pool dial-out code
	Sys Program→Tables→UDP Routing→Enter Pattern Number (1-20)→Enter→Enter Route Number (1-4)→ Enter→FRL→Enter restriction level (0-6)
	Sys Program→Tables→UDP Routing→Enter Pattern Number (1-20)→Enter→Enter Route Number (1-4)→ Enter→Absorb→Enter number absorption digits (0-11)
	Sys Program→Tables→UDP Routing→Enter Pattern Number (1-20)→Enter→Enter Route Number (1-4)→ Enter→Digits→Enter other digits
	Sys Program→Tables→UDP Routing→Enter Pattern Number (1-20)→Enter→Enter Route Number (1-4)→ Enter→Data→Select Voice Only, Data Only, or Voice/Data
	Sys Program→Extensions→**More**→**More**→ DisplayPre→Dial ext. no.→Enter→Select Calling Name, Calling Num, or Both
	Sys Program→SysRenumber→NonLocal UDP→ Enter starting number→Enter→Enter ending number
	Sys Program→LinesTrunks→**More**→UDP→ SwNum-Single→Enter trunk number→Enter→ Enter switch number→Enter
	Sys Program→LinesTrunks→**More**→UDP→ SwNum-Block→Enter starting number→Enter→ Enter ending trunk→Enter→Enter switch number→Enter
	Sys Program→LinesTrunks→**More**→UDP→ SMDR→Enter trunk number→Enter→Select Log incoming, Log outgoing, Log both, or Log none
	Sys Program→LinesTrunks→PRI→B-ChannlGrp→ NetworkServ→Enter→LegendUDP→ Select ElecTandNtwk
	Sys Program→LinesTrunks→PRI→B-ChannlGrp→ IncomingRtg→Enter→Route Directly to UDP→ Enter
	Sys Program→LinesTrunks→PRI→SwitchType (Select Legend-Ntwk or Legend-PBX)→Enter

Table 2–16. Programming Needed after Upgrade to Release 6.1

Feature	Sequence
Service Observing	To assign a Service Observer to a Service Observing group: Extensions→**More**→**More**→ServiceObs→Observer→ Dial group no.→Enter→Dial ext. no. of Service Observer→ Enter or Delete→Exit→Exit To enable or disable Warning Tone on a per group basis: Extensions→**More**→**More**→ServiceObs→Warning→ Dial group no.→Enter→Yes or No→Enter→Exit→ Exit To assign a member extension to a Service Observing group: Extensions→**More**→**More**→ServiceObs→Members→ Dial group no.→Enter→Dial ext. no.→Enter or Delete→ Exit→ Exit→Exit
SMDR Log UDP Calls	Options→SMDR→UDP→Log Incoming/Outgoing or Log None→Exit
Non-Local Dial Plan Extension Ranges	SysRenumber→NonLocal UDP→Dial no. of first extension in range→Enter→Dial no. of last extension in range→ Enter→Dial max. no. of digits user can enter to reach an extension in the range→Enter→Dial pattern no. for extension range→Enter→Exit→Exit

Surrogate Mode Programming

Surrogate mode allows qualified service personnel to perform system programming at an offsite service location. The actual communications system hardware does not have to be installed — the programmer needs only a direct connection from the PC to the processor module. By following a customer's set of completed planning forms, the system can be programmed as if the appropriate modules, trunks, telephones, and other communications equipment have been installed. When system programming is completed, a system backup is performed to save the information on disk. This backup disk is then taken to the new installation site and used with the Restore option to provide complete system programming for a new communications system.

You do not "select" surrogate mode programming — you enter it automatically under the following conditions:

- The PC is connected to the lower RS-232 port on a control unit (direct local connection).
- Only the processor and power modules are connected.

Once you enter surrogate mode programming, you must follow the sequence of procedures shown below.

- At the service location, perform the following:
  1. System Erase
  2. Program the Boards
  3. System Programming
  4. Backup
- At the installation site, perform a Restore.

While you are in surrogate mode, the Pass-Thru and Password options are not available.

NOTE:
Surrogate mode is available only through the local programming port. You cannot access surrogate features through the system programming console.

Programming Procedures

3

This chapter contains all of the procedures required for programming each of the features and options that are available for the MERLIN LEGEND Communications System.

Each of the procedures begins at the System Programming menu. Use one of the methods shown below to display the System Programming menu.

- At the console: **Menu**→`Sys Program`→`Exit`
- At the PC or with SPM: Type *spm*→[Enter ↵]→*Press any key*→[F1]→[F5]

Before you begin any of the procedures in this chapter, you should read and understand all of the information presented in Chapter 1, “Programming Basics.”

Basic System Operating Conditions

The procedures in this section are all related to the system, rather than to the operation of telephones, operator positions, lines, or trunks. These are operating conditions that must be set only once, when the system is new, or when you reset the factory settings.

NOTE:
You must reset the system time when Daylight Savings Time begins and ends.

This section contains the following programming procedures:

- System Restart
- System Programming Position Assignment
- System Language
- Board Renumbering
- Mode of Operation
- Automatic Maintenance Busy
- System Date
- System Time

System Restart

CAUTION:
This procedure is to be performed by qualified support personnel only.

Use this procedure to perform a System Restart (cold start). All calls are dropped when you perform this procedure. Existing system programming is saved. Telephones with the Extension Status feature may lose toll restrictions as a result of a System Restart.

Summary: System Restart

Programmable by	Qualified support personnel
Mode	All
Idle Condition	Not required
Planning Form	Not applicable
Factory Setting	None
Valid Entries	None
Inspect	No
Copy Option	No
Console Procedure	System→Restart→Yes
PC Procedure	F1 → F1 → F1

Procedure: System Restart

Console/Display Instructions	Additional Information	PC
▶ 1. Select the System menu.		
System Programming: > Make a selection System Extensions SysRenumber Options Operator Tables LinesTrunks AuxEquip Exit NightSrvce		F1
▶ 2. Select System Restart.		
System: Make a selection Restart MaintenBusy SProg Port Date Mode Time Board Renum Back/Restore Exit		F1

Console/Display Instructions	Additional Information	PC
▶ **3. Respond to the query.**		
System Restart: System will be down ... Do you want to continue? Yes No Exit	To restart the system, select **Yes.** The System Restart screen appears. To terminate the restart and return to the System menu, select **No,** then select **Exit.**	F1 F2 F5
Restart System is restarting	The session is finished, and the system restarts. You must enter system programming again to continue.	

System Programming Position Assignment

Use this procedure to reassign the extension used for system programming. This extension should not be the same extension as that used for the operator position. The system programming position can be reassigned only to one of the first five extension jacks on the first MLX module. Only one system programming console is allowed per system.

If you are programming on the console, be aware of the following:

- The console must be connected to the extension currently assigned for system programming.
- As soon as you change the system programming extension, the system programming session is terminated. To proceed with system programming, you must connect the system programming console to the newly assigned extension and enter system programming again.

NOTE:
The telephone used for system programming must be an MLX-20L.

Summary: System Programming Position Assignment

Programmable by	System Manager
Mode.	All
Idle Condition	Not required
Planning Form	Form 1, System Planning
Factory Setting	First extension jack on the first MLX module (also set as an operator position)
Valid Entries	Extension number of one of the first five extension jacks on the first MLX module
Inspect	No
Copy Option	No
Console Procedure	System→SProg Port→**Drop**→Dial ext. no.→Enter→Exit
PC Procedure	F1→F2→Alt + P→Type ext. no.→F10→F5

Procedure: System Programming Position Assignment

Console Display/Instructions	Additional Information	PC
▶ **1. Select the System menu.**		
System Programming: > Make a selection System Extensions SysRenumber Options Operator Tables LinesTrunks AuxEquip Exit NightSrvce		F1
▶ **2. Select System Programming Port.**		
System: Make a selection Restart MaintenBusy SProg Port Date Mode Time Board Renum Back/Restore Exit		F2

Console Display/Instructions	Additional Information	PC
▶ **3. Erase the current extension (*xxxx*).**		
System Programming Port: Enter extension *xxxx* Backspace Exit Enter	Press **Drop.**	Alt + P
▶ **4. Enter the new extension.**		
SP: “Entering an Extension”		
▶ **5. Save your entry.**		
Select Enter.		F10
▶ **6. Return to the System Programming menu.**		
Select Exit.		F5

System Language

Your communications system offers you a choice of three languages (English, French, and Spanish) for the following options:

- **System Language.** For system programming.
- **Station Message Detail Recording (SMDR) Reports.** See “SMDR Language” on page 467.
- **Print Reports.** See “Report Language” on page 611.
- **Extensions.** See “Optional Extension Features” on page 312.

Use this procedure to set the system language. See the sections listed above to set a different language for SMDR reports, print reports, and for an MLX display telephone.

NOTE:
MERLIN LEGEND Communications System Release 1.0 does not offer a choice of languages.

Summary: System Language

Programmable by	System Manager
Mode	All
Idle Condition	Not required
Planning Form	Form 1, System Planning
Factory Setting	English
Valid Entries	English, French, Spanish
Inspect	No
Copy Option	No
Console Procedure	**More**→Language→SystemLang→Yes→ Select a language→Enter
PC Procedure	PgUp→F6→F1→F3→Select a language→F10

Procedure: System Language

Console Display/Instructions	Additional Information	PC
▶ **1. Go to the second screen of the System Programming menu.**		
System Programming: > Make a selection System Extensions SysRenumber Options Operator Tables LinesTrunks AuxEquip Exit NightSrvce	Press **More.**	PgUp
▶ **2. Select Language.**		
System Programming Make a selection Labeling Language Data Print Cntr-Prg Exit		F6

Console Display/Instructions	Additional Information	PC

▶ 3. Select System Language.

```
Language:
Make a selection
SystemLang
Extensions
SMDR
Printer
Exit
```

F1

▶ 4. Respond to the prompt.

```
System Language:
All stations, SMDR, and
printer will be affected
Do you want to continue?
Yes
No
Exit
```

To set the system language, select **Yes.** F3

To terminate the procedure and return to the previous screen, select **No**, then F2
select **Exit.** F5

▶ 5. Select a system language. (The factory setting is English.)

```
System Language:
Select one
English
French
Spanish

Exit          Enter
```

Select **English,** F1
French, or F2
Spanish. F3

▶ 6. Save your entry.

Select **Enter.** F10

To program a single extension or block of extensions, see "Extension Language" on page 3–313.

Board Renumbering

CAUTION:
This procedure is to be performed by qualified support personnel only.

Use this procedure to renumber boards that have already been installed. This procedure restarts the system (system programming is not lost). Note that this is not the same procedure used with the Boards option, which is available to qualified service personnel with SPM only.

Board Renumbering is a system programming procedure that is required only when an existing module is replaced by a different type of module. When a Board Renumber is performed, the system reassigns the logical ID numbers to the extension and line ports sequentially from left to right in the control unit and from bottom to top of each module.

Summary: Board Renumbering

Programmable by	Qualified support personnel only
Mode	All
Idle Condition	System idle
Planning Form	Not applicable
Factory Setting	None
Valid Entries	Not applicable
Inspect	Not applicable
Copy Option	Not applicable
Console Procedure	System→Board Renum→Yes
PC Procedure	F1 → F4 → F2

Procedure: Board Renumbering

Console Display/Instructions	Additional Information	PC
▶ **1. Select the System menu.**		
System Programming: > Make a selection System Extensions SysRenumber Options Operator Tables LinesTrunks AuxEquip Exit NightSrvce		F1
▶ **2. Select Board Renumbering.**		
System: Make a selection Restart MaintenBusy SProg Port Date Mode Time Board Renum Back/Restore Exit		F4
▶ **3. Respond to the prompt.**		
Board Renumber: System will be down .... Do you want to continue? Yes No Exit	To continue the Board Renumbering procedure, select Yes. The renumbering information screen appears. To terminate this procedure and return to the System menu, select No, then select Exit.	F2 F3 F5
Board Renumber: System is Renumbering	When renumbering is complete, the system returns to the screen shown in Step 1.	

Mode of Operation

The system mode — Key, Behind Switch, or Hybrid/PBX — determines how the system operates and directly affects the following operations:

- How lines and/or trunks are provided to users
- Types of operator consoles allowed
- Features available

Changing this option causes a system restart and terminates the programming session. You must enter system programming again to program other features.

NOTE:
The Hybrid/PBX option is not available if the control unit processor module has been modified to operate in Permanent Key mode only. See the *Feature Reference* for more information.

The following options cannot be programmed for Behind Switch or Key systems:

- Automatic Route Selection (ARS)
- Pools
- Queued Call Consoles (QCCs) and associated features
- Direct Inward Dialing (DID) Trunks
- System Access buttons
- Dial Plan Routing (PRI)
- Call-by-Call Services (PRI)

The Ground-Start lines/trunks option cannot be programmed if the processor module has been modified for Permanent Key mode operation only.

Summary: Mode of Operation

Programmable by	System Manager
Mode	All
Idle Condition	System idle
Planning Form	Form 1, System Planning
Factory Setting	Hybrid/PBX
Valid Entries	Key, Behind Switch, Hybrid/PBX
Inspect	No
Copy Option	No
Console Procedure	System→Mode→Select mode→Enter
PC Procedure	F1 →F3 →Select mode→F10

Procedure: Mode of Operation

Console Display/Instructions	Additional Information	PC
1. Select the System menu.		
System Programming: > Make a selection System Extensions SysRenumber Options Operator Tables LinesTrunks AuxEquip Exit NightSrvce		F1
2. Select Mode.		
System: Make a selection Restart MaintenBusy SProg Port Date Mode Time Board Renum Back/Restore Exit		F3
3. Select the mode.		
Mode: Select one Key Hybrid/PBX BehndSwtch Exit Enter	Select Key, Hybrid/PBX, or BehndSwtch.	F1 F2 F3
4. Save your entry.		
Select Enter.	The session is terminated and the system restarts. You must enter system programming again to continue.	F10

Automatic Maintenance Busy

Automatic Maintenance Busy allows the system to take a malfunctioning trunk out of service for outgoing calls (incoming calls are never blocked). This prevents faulty outside facilities from causing disruptions in outgoing calling patterns.

For optimal performance, enable Automatic Maintenance Busy for Hybrid/PBX systems with pooled trunks.

NOTE:
No more than half of the trunks in a trunk pool are allowed to be placed in the maintenance busy state at one time, unless the central office has failed to disconnect a trunk (which prevents anyone from using that trunk) or an entire trunk module is manually taken out of use (a maintenance-busy state deliberately caused by the user).

Summary: Automatic Maintenance Busy

Programmable by	System Manager
Mode	All
Idle Condition	Not required
Planning Form	Form 1, System Planning
Factory Setting	Disabled
Valid Entries	Enabled, Disabled
Inspect	No
Copy Option	No

Console Procedure	To disable Automatic Maintenance Busy:
	`System→MaintenBusy→Disable→Enter→Exit`
	
	To enable Automatic Maintenance Busy excluding tie trunks:
	`System→MaintenBusy→Enable→Enter→Exit`
	
	To enable/disable with tie trunks:
	`System→MaintenBusy→Enable→Enter→`
	`Enable` or `Disable→Enter→Exit`

PC Procedure	To disable Automatic Maintenance Busy: F1 → F6 → F2 → F10 → F5 To enable Automatic Maintenance Busy excluding tie trunks: F1 → F6 → F1 → F10 → F5 To enable/disable with tie trunks: F1 → F6 → F1 → F10 → F1 or F2 → F10 → F5

Procedure: Automatic Maintenance Busy

Console Display/Instructions	Additional Information	PC

1. Select the System menu.

```
System Programming:      >
Make a selection
System          Extensions
SysRenumber     Options
Operator        Tables
LinesTrunks     AuxEquip
Exit            NightSrvce
```

F1

2. Select Automatic Maintenance Busy.

```
System:
Make a selection
Restart         MaintenBusy
SProg Port      Date
Mode            Time
Board Renum     Back/Restore
Exit
```

F6

3. Enable or disable Automatic Maintenance Busy.

```
Auto-Maintenance Busy:
Select one
Enable
Disable

Exit            Enter
```

Disable leaves malfunctioning trunks available for outgoing calls.

Select Enable or F1
Disable. F2

4. Save your entry.

Select Enter. F10

If you selected Enable or Disable and your system has no tie trunks, you have finished this procedure. Go to Step 7.

Console/Display Instructions **Additional Information** **PC**

▶ 5. Select the malfunctioning tie trunk service.

```
Auto Busy TIE Trunks:
Select one
Enable
Disable

Exit            Enter
```

If you selected Enable and your system has tie trunks, specify whether to take malfunctioning tie trunks out of service automatically or leave malfunctioning tie trunks available for outgoing calls.

Select Enable or Disable. F1 F2

▶ 6. Save your entry.

Select Enter. F10

▶ 7. Return to the System Programming menu.

Select Exit. F5

Set System Date

The System Date feature allows you to set the month, day, and year that appear on MLX display telephones and on Station Message Detail Recording (SMDR) reports.

NOTES:

1. If you plan to use the SMDR feature, make sure the current date is set.
2. In Release 6.0 and later systems, where a MERLIN LEGEND Communications System switch is networked in a private network with one or more MERLIN LEGEND Communications System switches or with one or more DEFINITY Communications Systems, SMDR reports may report outgoing calls using more than one call record (for example, for tandem calls), depending upon how SMDR is programmed and how calls are routed. Therefore, if SMDR is reporting outgoing calls and users are employing private network lines to make these calls, ensure that the system date and time are set accurately on each system that carries these calls. As you examine call reports, you may need to be aware of time zone differences among networked system locations.

Summary: Set System Date

Programmable by	System Manager
Mode	All
Idle Condition	Not required
Planning Form	Form 1, System Planning
Factory Setting	01-01-00
Valid Entries	Month: 01 to 12 Day: 01 to 31 Year: 00 to 99
Inspect	No
Copy Option	No
Console Procedure	System→Date→**Drop**→Dial current date→Enter→Exit
PC Procedure	F1→F7→Alt + P→Type current date→F10→F5

Procedure: Set System Date

Console Display/Instructions	Additional Information	PC
▶ **1. Select the System menu.**		
System Programming: > Make a selection System Extensions SysRenumber Options Operator Tables LinesTrunks AuxEquip Exit NightSrvce		F1
▶ **2. Select Date.**		
System: Make a selection Restart MaintenBusy SProg Port Date Mode Time Board Renum Back/Restore Exit		F7

Console Display/Instructions	Additional Information	PC
▶ **3. Erase the current system date (*xxxxxx*).**		
Date: Enter month (01-12), Date (01-31) Year (00-99) *xxxxxx* Backspace Exit Enter	Press **Drop.**	Alt + P
▶ **4. Enter six digits for the current date.**		
Dial or type [*mmddyy*].		⊂
▶ **5. Save your entry.**		
Select Enter.		F10
▶ **6. Return to the System Programming menu.**		
Select Exit.		F5

Set System Time

The System Time feature allows you to set the time that appears on MLX display telephones and on SMDR reports.

NOTES:

1. If you are planning to use the SMDR feature, make sure the system time is set accurately. If you change the system time while the system is in Night Service mode, Night Service is deactivated and must be manually reactivated. If you have installed applications such as MERLIN LEGEND Mail or Intuity AUDIX, you may need to set the time in the applications software whenever you reset the system time.
2. In Release 6.0 and later systems, where a MERLIN LEGEND Communications System is networked in a private network with one or more MERLIN LEGEND Communications Systems or with one or more DEFINITY Communications Systems, SMDR reports may report outgoing calls using more than one call record (especially for tandem calls), depending upon how SMDR is programmed and how calls are routed. Therefore, ensure that the system date and time are set accurately on each system that carries these calls. When you examine records for network calls, you may need to be aware of time zone differences among different system locations.

Summary: Set System Time

Programmable by	System Manager
Mode	All
Idle Condition	Not Required
Planning Form	Form 1, System Planning
Factory Setting	0000
Valid Entries	0000 to 2359
Inspect	No
Copy Option	No
Console Procedure	System→Time→**Drop**→Dial current time→Enter→Exit
PC Procedure	F1→F8→Alt + P→Type current time→F10→F5

Procedure: Set System Time

Console Display/Instructions	Additional Information	PC
▶ **1. Select the System menu.**		
System Programming: > Make a selection System Extensions SysRenumber Options Operator Tables LinesTrunks AuxEquip Exit NightSrvce		F1
▶ **2. Select Time.**		
System: Make a selection Restart MaintenBusy SProg Port Date Mode Time Board Renum Back/Restore Exit		F8

Console Display/Instructions	Additional Information	PC
▶ **3. Erase the current system time (*xxxx*).**		
Date: Enter hour (00-23) and minutes (00-59) *xxxx* Backspace Exit Enter	Press **Drop.**	Alt + P
▶ **4. Enter four digits for the current time.**		
Dial or type [*hhmm*].		
	Use 24-hour (military) notation (for example, enter 11:30 p.m. as 2330). Use leading zeros if necessary (for example, enter 4 a.m. as 0400).	
▶ **5. Save your entry.**		
Select Enter.		F10
▶ **6. Return to the System Programming menu.**		
Select Exit.		F5

System Renumbering

The procedures in this section are used to assign the 2-digit, 3-digit, and Set Up Space numbering plans for the local MERLIN LEGEND Communications System.

NOTE:
System Renumbering is called *Flexible Numbering* in the MERLIN II Communications System. This is *not* the same as Board Renumbering, an option used when modules in the control unit are changed.

Do not attempt to assign a numbering plan without Planning Forms 2a, System Numbering: Extension Jacks; 2b, System Numbering: Digital Adjuncts; and 2d, System Numbering: Special Renumbers. Form 6a, Optional Operator Features, is needed to assign a DSS **Page** button. This section contains the following programming procedures:

- Select System Numbering Plan
- Single Renumbering
- Block Renumbering
- Non-Local Dial Plan Renumbering (Release 6.0 and later systems only)
- Direct Station Selector (DSS) **Page** Button Assignment

For the local system, you then select only one of the numbering plans (2-digit numbering, 3-digit numbering, or Set Up Space numbering). In addition, you may need to perform single and/or block renumbering. You do not need to assign DSS **Page** buttons unless the system programming console or one of the operator positions is connected to a DSS. No matter which procedures you need to perform, assign the numbering plan first, then do single and/or block renumbering, and finally, assign DSS **Page** buttons (if necessary).

In Release 6.0 and later systems (Hybrid/PBX mode only), you may choose non-local dial plan numbering to specify the numbering of extensions connected to remote private network systems and to allow users on your system to access those extensions as if they were connected to your own system. You specify only ranges of extensions.

NOTE:
Refer to the *Network Reference* for information on private networking and non-local dial plan numbering.

Use the single renumbering procedure whenever the extension numbers you are changing *from or to are not sequential.*

Block renumbering is quicker, but you can use block renumbering only when the extension numbers you are changing *from and to are sequential.*

When trunk or extension modules are removed from the control unit, the remaining modules must be rearranged so that no empty slots remain. The system does not acknowledge any modules installed after an empty slot; therefore, if the system is renumbered, extensions are not assigned to extension jacks after the empty slots.

NOTE:
Figure 3–1, Figure 3–2, and Figure 3–3 show the factory settings in the gray spaces. Extensions can be renumbered to any number shown in the white spaces.

<table>
<tr><td>0</td><td colspan="6">Operator Console (not flexible) 0</td></tr>
<tr><td>1</td><td colspan="6">Extensions 10–19</td></tr>
<tr><td>2</td><td colspan="6">Extensions 20–29</td></tr>
<tr><td>3</td><td colspan="6">Extensions 30–39</td></tr>
<tr><td>4</td><td colspan="6">Extensions 40–49</td></tr>
<tr><td>5</td><td colspan="6">Extensions 50–59</td></tr>
<tr><td>6</td><td colspan="2">Extensions 60–66</td><td>Extra Extensions 6700–6842</td><td>6843–6849</td><td>Extra MFMs/ Terminal Adapters 6850–6992</td><td>6993–6999</td></tr>
<tr><td>7</td><td>Main Pool 70</td><td>MFMs/ Terminal Adapters 710–766</td><td>767–769</td><td colspan="2">Calling Groups 770–791,7920–7929</td><td>Paging Groups 793–799</td></tr>
<tr><td>8</td><td>800*</td><td colspan="2">Trunks 801–880</td><td>Park 881–888</td><td>889†</td><td>Pools 890–899</td></tr>
<tr><td>9</td><td colspan="6">ARS Access (Hybrid/PBX Mode) / Idle Line Access 9</td></tr>
</table>

* Listed Directory Number (QCC Queue)
† Remote Access
NOTE: “0” and “10” are the same station.

Figure 3–1. 2-Digit Numbering

0	Operator Console (not flexible) 0				
1	Extensions 100–199				
2	Extensions 200–299				
3	MFMs/Terminal Adapters 300–399				
4	MFMs/Terminal Adapters 400–499				
5	500–599				
6	600–699				
7	Main Pool 70	71–76	Calling Groups 770–791, 7920–7929		Paging Groups 793–799
8	800*	Trunks 801–880	Park 881–888	889†	Pools 890–899
9	ARS Access (Hybrid/PBX mode)/Idle Line Access				

* Listed Directory Number (QCC)
† Remote Access
NOTE: “0” and “100” are the same station.

Figure 3–2. 3-Digit Numbering

0	Operator Console (not flexible) 0				
1	100–199				
2	200–299				
3	300–399				
4	400–499				
5	500–599				
6	600–699				
7	Main Pool 70	Extensions 7100–7299	MFMs/Terminal Adapters 7300–7499	7500–7699	Calling Group 770–791, 7920–7929	Paging Groups 793–799
8	800*	Trunks 801–880		Park 881–888	889†	Pools 890–899
9	ARS Access (Hybrid/PBX mode)/Idle Line Access 9					

* Listed Directory Number (QCC).
† Remote Access
NOTE: “ 0” and “7001” are the same station.

Figure 3–3. Set Up Space Numbering

Select System Numbering Plan

WARNING:
To avoid possible loss of system programming information, renumber the system before you program the rest of the options described in this chapter.

The three available local system numbering plans listed below appear on System Planning Form 2a.

- **Two-Digit.** This plan is for systems with fewer than 50 extensions and no plans to exceed that number in the foreseeable future. Each of the first 58 extension jacks is assigned a 2-digit extension number, beginning with 10 and ending with 67. Any remaining extensions are assigned 4-digit numbers, starting with 6700 and ending with 6842.
- **Three-Digit.** This plan is for systems with 50 or more extensions or plans to grow to that number in the foreseeable future. All extensions are assigned a 3-digit number, starting with 100 and ending with 299.
- **Set Up Space.** This plan is for systems with a need to customize extension numbers or use extension numbers of varying lengths (one to four digits). All extensions are assigned 4-digit numbers in the 7000 range. Extension numbers 1000–6999 are also available for use when you renumber.

In all three local numbering plans, the system assigns 3-digit extension numbers to pools (Hybrid/PBX only), calling groups, paging groups, remote access codes, the Listed Directory Number, park codes, and Idle Line Access (Key and Behind Switch modes). In addition, the system assigns 9 for Automatic Route Selection (Hybrid/PBX only) and Idle Line Access (Key and Behind Switch only). Zero (0) represents a special extension number — actually a fixed dial code — for the primary operator or QCC queue. Any extension number except 0 can be renumbered.

Extension numbers can be composed of any combination of digits; however, no number can begin with 0. Trunk numbers (801–880) are considered to be extensions and can be renumbered.

The system does not provide a message to indicate a successful renumber when either the 2-digit or 3-digit numbering plan is selected. For the Set Up Space numbering plan, the system provides a message indicating that all extensions are in the 7000 range.

CAUTION:
Select `Exit` *on the console, or* [F5] *on the PC, when you have finished selecting the numbering plan. If you press* ***Home****, extensions may remain in the forced idle condition (indicated when the LED next to each DSS button is on). To restore extensions to their normal operating state, restart the system.*

Summary: Select System Numbering Plan

Programmable by	System Manager
Mode	All
Idle Condition	System idle
Planning Form	Form 2a, System Numbering: Extension Jacks
Factory Setting	Two-digit
Valid Entries	Two-digit, Three-digit, Set Up Space
Inspect	No
Copy Option	No
Console Procedure	SysRenumber→Default Numbering→ Select numbering plan→Exit→Exit
PC Procedure	F2 → F1 →Select numbering plan→ F5 → F5

Procedure: Select System Numbering Plan

Console Display/Instructions **Additional Information** **PC**

▶ 1. Select the System Renumbering menu.

```
System Programming:      >
Make a selection
System          Extensions
SysRenumber     Options
Operator        Tables
LinesTrunks     AuxEquip
Exit            NightSrvce
```

F2

▶ 2. Select Default Numbering.

```
System:
Make a selection
Default Numbering
Single
Block
NonLocal UDP
Exit
```

If you get the System Busy message, wait for an idle condition, or exit system programming and try again later.

F1

Console Display/Instructions	Additional Information	PC

▶ 3. Select the appropriate system numbering plan.

```
Default Numbering:
Make a selection
2-Digit
3-Digit
SetUp Space

Exit
```

Select 2-Digit and go to Step 5. F1
Select 3-Digit and go to Step 5. F2
Select SetUp Space and continue with Step 4. F3

▶ 4. Observe the Initialize Space screen.

```
Initialize Space:
AllExtensions 7000 range

Exit
```

If you selected SetUp Space you have finished this procedure.
Select Exit and go to Step 6. F5

▶ 5. Select the type of extension to renumber.

```
System Renumber:
Make a selection
Default Numbering
Single
Block

Exit
```

To change individual extension numbers, select Single and go to “Single Renumbering” in the next section. F2

To change a block of extension numbers, select Block and go to “Block Renumbering” on page 3–29. F3

▶ 6. Return to the System Programming menu.

Select Exit twice. F5 F5

Single Renumbering

Use this procedure to assign a specified extension number to a telephone, accessory, line, pool (Hybrid/PBX only), calling group, paging group, or Listed Directory Number. Single renumbering is also used for Remote Access, Park, Idle Line Access (Key and Behind Switch only), and Automatic Route Selection (Hybrid/PBX only).

CAUTION:
Select `Exit` *on the console, or* [F5] *on the PC, after renumbering extensions. If you press* ***Home****, extensions may remain in the forced idle condition (indicated when the LED next to each DSS button is on). To restore extensions to their normal operating state, restart the system.*

When required, this procedure should be performed immediately following the selection of a system numbering plan.

Summary: Single Renumbering

Programmable by	System Manager
Mode	All
Idle Condition	System idle
Planning Form	Form 2a, System Numbering: Extension Jacks Form 2b, System Numbering: Digital Adjuncts Form 2d, System Numbering: Special Renumbers
Factory Setting	Not applicable
Valid Entries	Old and new extension numbers
Inspect	Yes
Copy Option	No
Console Procedure	`SysRenumber`→`Single`→Select item→Dial old ext. no.→ `Enter`→Dial new ext. no.→`Enter`→`Exit`→`Exit`
PC Procedure	[F2]→[F2]→Select item→Type old ext. no.→[F10]→ Type new ext. no.→[F10]→[F5]→[F5]

Procedure: Single Renumbering

Console Display/Instructions **Additional Information** **PC**

▶ 1. Select the System Renumbering menu.

```
System Programming:      >
Make a selection
System          Extensions
SysRenumber     Options
Operator        Tables
LinesTrunks     AuxEquip
Exit            NightSrvce
```

F2

▶ 2. Select Single renumbering.

```
System:
Make a selection
Default Numbering
Single
Block
NonLocal UDP
Exit
```

If you get the System Busy message, wait for an idle condition, or exit system programming and try again later.

F2

▶ 3. Review the menu options.

```
System Renumber:         >
Make a selection
Lines           Grp Calling
Extensions      Adjuncts
Pools           Park
Group Page      ARS DialOut
Exit            RemoteAccs
```

If the item you want to renumber is not displayed, go to the second screen of the System Renumber menu.

Press **More.** PgUp

```
System Renumber:
Make a selection
DSS Buttons
ListDirctNo


Exit
```

▶ 4. Select an item for renumbering.

Press the button or function key next to your selection.

Console Display/Instructions **Additional Information** **PC**

▶ **5. Enter the old extension for the item selected (****) in Step 4.**

```
****:
Enter old **** number



Backspace
Exit            Enter
```

If you get the Station Busy message, wait for an idle connection, or exit system programming and try again later.

SP: “Entering an Extension”

▶ **6. Save your entry.**

Select Enter. F10

▶ **7. Enter the new extension.**

```
**** xxxx :
Enter new **** number



Backspace       Next
Exit            Enter
```

**** = item selected in Step 4
xxxx = extension entered in Step 5

SP: “Entering an Extension”

▶ **8. Save your entry.**

Select Enter or F10
Next. F9

If you use Next to renumber the next item (****) displayed on Line 1, return to Step 7.

▶ **9. Return to the System Programming menu.**

Select Exit two times. F5 F5

Block Renumbering

Use this procedure to assign extension numbers to a group of extensions, accessories, or lines. Both the original numbers and the numbers they are being changed to must be sequentially numbered.

When required, this procedure should be performed immediately following the selection of a system numbering plan.

CAUTION:
Select `Exit` *on the console, or* [F5] *on the PC, when you have finished renumbering extensions. If you press* ***Home****, extensions may remain in the forced idle condition (indicated when the LED next to each DSS button is on). To restore extensions to their normal operating state, restart the system.*

Summary: Block Renumbering

Programmable by	System Manager
Mode	All
Idle Condition	System idle
Planning Form	Form 2a, System Numbering: Extension Jacks Form 2b, System Numbering: Digital Adjuncts Form 2d, System Numbering: Special Renumbers
Factory Setting	Not applicable
Valid Entries	Old and new extension numbers
Inspect	Yes
Copy Option	Yes
Console Procedure	`SysRenumber`→`Block`→Select type of group→Dial no. of first group member→`Enter`→Dial no. of last group member→`Enter`→Dial new beginning no.→`Enter`→ `Exit`→`Exit`→`Exit`
PC Procedure	[F2]→[F3]→Select type of group→Type no. of first group member→[F10]→Type no. of last group member→ [F10]→Type new beginning no.→[F10]→[F5]→[F5]→[F5]

Procedure: Block Renumbering

Console Display/Instructions	Additional Information	PC
1. Select the System Renumber menu.		
System Programming: > Make a selection System Extensions SysRenumber Options Operator Tables LinesTrunks AuxEquip Exit NightSrvce		F2
2. Select Block renumbering.		
System Renumber: Make a selection Default Numbering Single Block NonLocal UDP Exit	If you get the System Busy message, wait for an idle condition, or exit system programming and try again later.	F3
3. Select the type of group to renumber.		
Block Renumber: Make a selection Lines Extensions Adjuncts Exit	Select Lines, Extensions, or Adjuncts.	F1 F2 F3
4. Enter the currently assigned number for the first member of the group.		
Number ****: Enter starting **** Backspace Exit Enter	**** = option name selected in Step 3 **SP:** “Entering an Extension”	
5. Save your entry.		
Select Enter.		F10

Console Display/Instructions **Additional Information** **PC**

▶ **6. Enter the currently assigned number for the last member of the group.**

```
Start at nnnn:
Enter ending ****



Backspace
Exit            Enter
```

nnnn = number entered in Step 4
******** = option name selected in Step 3

SP: “Entering an Extension”

▶ **7. Save your entry.**

Select Enter. F10

▶ **8. Enter the new extension number.**

```
Start At nnnn
Enter new **** number



Backspace
Exit            Enter
```

nnnn = number entered in Step 6
******** = option name selected in Step 3

▶ **9. Save your entry.**

Select Enter. F10

▶ **10. Return to the System Programming menu.**

Select Exit three times. F5 F5 F5

Non-Local Dial Plan Extension Ranges

In Release 6.0 and later systems (Hybrid/PBX mode only), the system manager can enter ranges of extensions for non-local systems networked to the local MERLIN LEGEND Communications System. The process does not affect programming on non-local systems, each system must be individually programmed.

In Release 6.1 and later systems, the maximum number of digits (1 to 11) the user can enter to reach an extension on the non-local system is specified for each non-local dial plan extension range. This accelerates dialing by allowing call processing to act immediately when the number of digits entered equals the number specified.

This topic describes the following procedures:

- Specifying new extension number ranges
- Deleting extension number ranges

The extension ranges you enter using this procedure are the numbers that users on your system dial in order to make System Access (**SA**) calls to users on the non-local system. Users dial these calls in the same way that they dial inside calls on your local system. In most cases they should be the same numbers that users in the non-local system dial to reach one another. Numbering must be planned to avoid conflicts and provide unambiguous extension numbers across private networks.

NOTE:
It is recommended that all extensions in a range be of the same length to help minimize call processing times. For private networks that include Centralized Voice Messaging, it is recommended that all extensions in the private network be of the same length. See the *Network Reference* for additional considerations.

Non-local dial plan calls are routed over pools of private trunks using UDP routing. Maintaining existing dial plans when systems are connected in a private network may not be possible due to ambiguity or when one system's dial plan changes. UDP routing using digit absorption and digit prepending, which allow dialed numbers to be modified before they are actually sent to the remote system, may help to minimize changes. However, this will quickly increase dial plan complexity for private network UDP calls and can affect Centralized Voice Messaging operation. Therefore, these techniques should not be used except in special cases for non-local private network UDP calls. Deleting and prepending digits are very useful methods and are easily set up for routing non-local dial plan calls over the PSTN, if necessary. For additional information about UDP routing, see "Uniform Dial Plan Routing" on page 3–565.

WARNING:
Use extreme caution when employing the `Default Numbering` *option of System Renumbering. Any numbering you have entered is erased and the system numbering is set to factory settings.*

NOTES:

1. The `Default Numbering` option of System Renumbering renumbers local system extensions only. It also removes the local system's non-local dial plan entries.
2. Non-local dial plan ranges on local systems should be large enough to minimize range renumbering when a remote system changes. When the numbering of a remote system changes, the system manager should check the new external numbers and ascertain their impact on the non-local dial plan numbers accessed using this procedure, then make changes manually.

Specifying New Extension Ranges

This procedure verifies that extension numbers on the local system do not conflict with those on a non-local private network switch. For example, if Extension 110 exists in the local system, Extension 1100 cannot exist on a non-local system. It also checks to see whether new extension number ranges conflict with existing ranges set for the non-local system.

MERLIN LEGEND Communications System non-local dial plan numbering supports extensions up to 4 digits in length (2-, 3-, or 4-digit dial plans), while DEFINITY Communications Systems have 5-digit extension numbers. There are two methods you can use to number DEFINITY non-local dial plan ranges. Choose one of the following techniques, depending upon the actual extension numbers you are entering in ranges and potential conflicts:

- Specify ranges that include the first four digits in the extension numbers. Each number you enter in the procedure represents 10 numbers in the remote system. For example, an extension range entered as 4321 through 4322 represents remote extensions 43210 through 43220. Users actually dial five digits. The local system recognizes the number range by the first four digits. In Release 6.1 and later, program the number of dial digits to 5.
- Enter the last four digits and use UDP routing to prepend the first digit in the DEFINITY extension number. The local system recognizes the number range using the last four digits. Users dial only the last four digits. This method must be used for DID trunks that terminate on a MERLIN LEGEND system which have numbers in the DID range that terminate on a DEFINITY system. For details about UDP routing, see "Uniform Dial Plan Routing" on page 3–565. In Release 6.1 and later, program the number of dial digits to 4.

An extension range may stipulate a single extension number.

Renumbering of non-local extensions does not require putting those extensions in the forced-idle condition on the remote system.

The pattern number specified in this procedure creates an index into a group of routes that are used to connect to the non-local dial plan extensions. More than one range of extensions can use the same pattern number. UDP routes within a pattern are assigned pools, routes, and other attributes. For more information, see "Uniform Dial Plan Routing" on page 3–565.

SECURITY ALERT:
Do not program the remote system ARS access code into the non-local dial plan. To do so will allow unauthorized calling over remote system facilities. If the local system interprets the number as an extension on the remote system, no ARS restriction checking is performed locally. Remote systems normally do not perform ARS restriction checking.

Summary: Specifying New Extension Ranges

Programmable by	System Manager
Mode	Hybrid/PBX
Idle Condition	None
Planning Form	Form 2a, System Numbering: Extension Jacks Form 2b, System Numbering: Digital Adjuncts Form 2d, System Numbering: Special Renumbers Non-Local Dial Plan Administration Form in the Installation Specification
Factory Setting	Not applicable
Valid Entries	Starting and ending numbers for old and new extension ranges
Ranges	50
Inspect	Yes, existing number ranges
Copy Option	No
Console Procedure	`SysRenumber`→`NonLocal UDP`→Dial no. of first extension in range→`Enter`→Dial no. of last extension in range→`Enter`→Dial max. no. of digits user can enter to reach an extension in the range→`Enter`→Dial no. of pattern for extension range→`Enter`→`Exit`→`Exit`
PC Procedure	[F2]→[F4]→Type no. of first extension in range→[F10]→Type no. of last extension in range→[F10]→Type max. no. of digits user can enter to reach an extension in the range→[F10]→Type no. of pattern for extension range→[F10]→[F5]→[F5]

Procedure: Specifying New Extension Ranges

Console Display/Instructions **Additional Information** **PC**

1. Select the System Renumber menu.

```
System Programming:      >
Make a selection
System          Extensions
SysRenumber     Options
Operator        Tables
LinesTrunks     AuxEquip
Exit            NightSrvce
```

F2

2. Select Non-Local UDP renumbering.

```
System Renumber:
Make a selection
Default Numbering
Single
Block
NonLocal UDP
Exit
```

F4

3. Dial or type the first number in the range.

```
NonLocal UDP:
Enter starting number



Backspace
Exit            Enter
```

If the number conflicts with an existing number on the local system, or it is not the beginning number of an existing range and is within a range for a remote system, check the system planning forms and try again.
SP: “Entering an Extension”

4. Go to the next step.

Select Enter.

F10

CAUTION:
Pressing Enter *does not save information until Step 10 of this procedure.*

Console Display/Instructions **Additional Information** **PC**

▶ **5. Enter the number for the last extension in the range. It must be equal to or higher than the starting number.**

```
NonLocal UDP Start nnnn :
Enter ending number

                DelRange
Backspace
Exit            Enter
```

nnnn = number entered in Step 3
If the range conflicts with existing number(s) on the local system or is a starting or intermediate number for a remote system, check the system planning forms and try again. The ending number may be increased without first deleting the range.
SP: "Entering an Extension"

▶ **6. Go to the next step.**

Select Enter. F10

▶ **7. Enter the maximum number of digits the user can enter to reach an extension in the range (*nn* = 1–11).**

```
NL-UDP Range nnnn-xxxx :
Enter the number of dial
digits for the range:

Backspace
Exit            Enter
```

nnnn = number entered in Step 3
xxxx = number entered in Step 5

Dial or type the number of dial digits [*nn*].

▶ **8. Go to the next step.**

Select Enter. F10

▶ **9. Choose a pattern number to specify routes for call delivery (*nn* = 1–20).**

```
NL-UDP Range nnnn-xxxx :
Enter pattern number
to save range (1-20)

Backspace
Exit            Enter
```

nnnn = number entered in Step 3
xxxx = number entered in Step 5

Dial or type a pattern number [*nn*].

▶ **10. Save your entry.**

Select Enter. F10

▶ **11. Return to the System Programming menu.**

Select Exit two times. F5 F5

Deleting Extension Ranges

This procedure deletes the numbering for specified extension ranges of a non-local system and can be used, for example, to prepare for renumbering local or remote system extensions.

Summary: Deleting Extension Ranges

Programmable by	System Manager
Mode	Hybrid/PBX
Idle Condition	None
Planning Form	Form 2a, System Numbering: Extension Jacks Form 2b, System Numbering: Digital Adjuncts Form 2d, System Numbering: Special Renumbers Non-Local Dial Plan Administration Form in the Installation Specification
Factory Setting	Not applicable
Valid Entries	Starting numbers for extension ranges to be deleted
Inspect	Yes: existing number ranges
Copy Option	No
Console Procedure	SysRenumber→NonLocal UDP→Dial no. of first extension in range→Enter→DelRange→Exit→Exit
PC Procedure	F2→F4→Type no. of first extension in range→F10→F8→F5→F5

Procedure: Deleting Extension Ranges

Console Display/Instructions	Additional Information	PC
1. Select the System Renumber menu.		
System Programming: > Make a selection System Extensions SysRenumber Options Operator Tables LinesTrunks AuxEquip Exit NightSrvce		F2

Console Display/Instructions **Additional Information** **PC**

▶ **2. Select Non-local renumbering.**

```
System Renumber:
Make a selection
Default Numbering
Single
Block
NonLocal UDP
Exit
```

F4

▶ **3. Dial or type the first number in the range of extensions to delete.**

```
NonLocal UDP:
Enter starting number



Backspace
Exit            Enter
```

If the number conflicts with an existing number on the local system or is not the beginning number of an existing range and is within a range for a remote system, check the system planning forms and try again.
SP: “Entering an Extension”

▶ **4. Save your entry.**

Select Enter.

F10

▶ **5. The last extension number in the range is displayed. Delete the range.**

```
NonLocal UDP Start: nnnn :
Enter ending number

xxxx
                DelRange
Backspace
Exit            Enter
```

nnnn = number entered in Step 3
xxxx = ending number in range that begins with *nnnn*.

F8

▶ **6. Return to the System Programming menu.**

Select Exit two times.

F5 F5

Direct Station Selector (DSS) Page Buttons

Use this procedure to set the three **Page** buttons on the DSS to correspond to the system numbering plan. This procedure assigns extension numbers to DSS buttons. You cannot program individual buttons on a DSS; this is the only method for programming DSS buttons**.**

Page button assignment should be sequential. If only one DSS is attached, each Page button assignment sets the console for a range of 50 extension numbers: Page 1: 0 to 49; Page 2: 50 to 99; Page 3: 100 to 149.

If two DSSs are attached, each **Page** button assignment sets the console for a range of 100 extension numbers. If two DSSs are attached to the console, change the factory setting so that the difference between extension numbers assigned to the range is at least 100. For example, assign Page 1 to begin with extension 10, Page 2 to begin with extension 110, and Page 3 to begin with extension 210.

Operator Park Zone codes must be included in the extension number range specified for one of the **Page** buttons.

CAUTION:
Select `Exit` *on the console, or* [F5] *on the PC, when you have finished this procedure. If you press* ***Home****, extensions may remain in the forced idle condition (the LED next to each DSS button is on), and the system may have to be restarted.*

Summary: Assign Direct Station Selector Page Buttons

Programmable by	System Manager
Mode	All
Idle Condition	Not required
Planning Form	Form 6a, Optional Operator Features
Factory Setting	Page 1=0; Page 2=50; Page 3=100
Valid Entries	1, 2, 3
Inspect	Yes
Copy Option	No
Console Procedure	`SysRenumber`→`Single`→**More**→`DSS Buttons`→Dial page no.→`Enter`→Dial first ext. no.→`Enter`→`Exit`→`Exit`
PC Procedure	[F2]→[F2]→[PgUp]→[F1]→Type page no.→[F10]→ Type first ext. no.→[F10]→[F5]→[F5]

Procedure: Assign Direct Station Selector Page Buttons

Console Display/Instructions	Additional Information	PC
▶ **1. Select the System Renumber menu.**		
System Programming: > Make a selection System Extensions SysRenumber Options Operator Tables LinesTrunks AuxEquip Exit NightSrvce		F2
▶ **2. Select Single renumbering.**		
System Renumber: Make a selection Default Numbering Single Block NonLocal UDP Exit		F2
▶ **3. Go to the second screen of the System Renumber menu.**		
System Renumber: > Make a selection Lines GrpCalling Extensions Adjuncts Pools Park Group Page ARS DialOut Exit RemoteAccs	Press **More**.	PgUp
▶ **4. Select DSS Buttons.**		
System Renumber: Make a selection DSS Buttons ListDirctNo Exit		F1

Console Display/Instructions **Additional Information** **PC**

▶ **5. Enter the number of the Page button you want to program (*n* =1 to 3).**

```
DSS Page Buttons:
Enter button number(1-3)
n



Backspace
Exit            Enter
```

Dial or type [*n*].

▶ **6. Save your entry.**

Select Enter. F10

▶ **7. Erase the current dial code (*nnnn*).**

```
DSS Page Button n:
Enter first dial code of
group (multiple of 50)
nnnn

Backspace       Next
Exit            Enter
```

n = page button entered in Step 5

Press **Drop**. Alt + P

▶ **8. Enter the first extension of the group of 50 or 100 extension numbers.**

Dial or type [*nnnn*].

If you reassign an extension from one page to another, you must repeat Steps 4 through 7 for each page before you return to the System Programming menu.

▶ **9. Continue with additional entries, or go to Step 10.**

Select Next. F9

Return to Step 7. The next DSS Page Button is displayed on Line 1.

▶ **10. Save your entry.**

Select Enter. F10

▶ **11. Return to the System Programming menu.**

Select Exit twice. F5 F5

System Operator Positions

A system operator position, for a Queued Call Console (QCC) operator or a Direct-Line Console (DLC) operator, should be programmed before you program lines or trunks.

Use the following procedures either to add an operator position or to change an existing operator position.

The Queued Call Console (QCC) operator position is available only for Hybrid/PBX systems. The Direct-Line Console (DLC) operator position is available in any mode and must be programmed if you have Call Management Systems connected to any operator extension jacks.

Table 3–1 shows the maximum number of operator positions allowed for any one system.

Table 3–1. Maximum Number of Operator Positions

Position Type	Type of Telephone	Maximum Positions
QCC	MLX-20L	4
DLC	MLX-20L	8
	MLX-28D	
	Analog multiline telephones	
	MERLIN II Display Consoles	
Total QCC + DLC		8

Any combination of operator positions can be assigned as long as no more than four operator positions are QCCs and the total number of operator positions does not exceed eight.

If you want to designate a new operator position and the system already has the maximum number of operator positions, you must change an existing operator position to a nonoperator position before you designate a new operator position.

NOTE:
When you change an extension to an operator position, or vice versa, the system returns the port (extension jack) type of that extension to the factory setting. You must reprogram lines and any features for that telephone or console. You may also need to change any attached accessory equipment and optional features.

Primary Operator Positions

The primary operator position is the extension to which your call is directed when 0 is dialed on a System Access button. The first extension jack on the first MLX module in your system is assigned as the primary operator position. If your system has QCC operator positions, this position must be changed from the factory setting (DLC) to a QCC operator position. (The primary operator extension cannot be changed from the first extension on the first MLX module.)

QCC System Operator Positions

This procedure applies to Hybrid/PBX systems only. Note that both QCC and DLC operator positions can be assigned with this procedure, although its primary purpose is to assign QCC operator positions.

QCC operators serve as central answering positions for all incoming calls. Incoming calls are held in the QCC queue and are directed to each QCC operator in a prioritized sequence. The calls are received one at a time, regardless of the number of incoming calls to the system.

Additional QCC operator positions can be assigned only to the first and fifth extension jacks of the MLX modules. A maximum of four QCC operator positions can be assigned. Use this procedure to specify QCC operator positions that serve as central answering positions for all incoming calls.

NOTE:
If you want to add or remove QCC operator positions, the following conditions apply:

- If other QCC positions remain in your system, the primary QCC operator position cannot be removed.
- When QCC operator positions are added, the primary QCC operator position should be the first one added.
- If QCC operator positions are being removed, the primary QCC operator position must be the last one removed.

Summary: QCC Operator Positions

Programmable by	System Manager
Mode	All
Idle Condition	System idle
Planning Form	Form 2a, System Numbering: Extension Jacks
Factory Setting	Type: DLC
Valid Entries	First or fifth extension jack on MLX module (maximum: two per module; four QCCs per system)

Inspect	Yes
Copy Option	No
Console Procedure	Operator→Positions→Queued Call→Dial ext. no.→ Enter or Delete→Store All
PC Procedure	F3→F1→F2→Type ext. no.→F10 or F8→F3

Procedure: QCC Operator Positions

Console Display/Instructions	Additional Information	PC

1. Select the Operator menu.

```
System Programming:      >
Make a selection
System          Extensions
SysRenumber     Options
Operator        Tables
LinesTrunks     AuxEquip
Exit            NightSrvce
```

F3

2. Select Positions.

```
System Operator:
Make a selection
Positions
Queued Call
Hold Timer
DLC Hold
Exit
```

F1

3. Select Queued Call (QCC).

```
System Operator:
Make a selection
Direct Line
Queued Call


Exit
```

If you get the System Busy message, wait for an idle condition or exit system programming and try again later.

F2

Console Display/Instructions **Additional Information** **PC**

▶ 4. Specify the QCC extension as a QCC position.

```
QCC Operator Positions:
Enter extension



Store All        Delete
Backspace
Exit             Enter
```

If no DSS is attached:
SP: “Entering an Extension”
If DSS is attached:
Toggle the red LED on or off as required. Go to Step 6.
On = extension is currently assigned
Flashing = ext. can be assigned as a QCC
Off = ext. cannot be assigned as a QCC

▶ 5. Assign or remove the QCC operator extension.

Select Enter or F10
Delete. F8

You may continue to assign or remove QCC operator positions by repeating Steps 4 and 5.

▶ 6. Indicate that you have finished entering all positions.

Select Store All. F3

The session is terminated and the system restarts. You must enter system programming again to continue.

DLC Operator Positions

DLC operator positions can be assigned to the first and fifth extension jacks on the first modules with either digital or analog multiline extension jacks. A maximum of eight DLC operator positions can be assigned. Any combination of operator positions can be assigned as long as there are no more than four QCC operator positions and no more than a total of eight operator positions.

Use this procedure to specify extensions that serve as central answering positions for all incoming calls, either for Call Management Systems (CMSs) connected to operator extension jacks, or as calling group supervisor extensions. (You do not need to use this procedure in a Key or Behind Switch system unless you have more than one DLC position.) For a new system, remove the factory-set DLC operator position assignment for any telephone not used as an operator position.

Lines and trunks are assigned to individual buttons.

The system programming console can have several incoming calls ringing simultaneously.

Each CMS requires two DLC operator positions to connect the equipment and one position to serve as CMS supervisor.

Summary: Identify or Remove DLC Operator Positions

Programmable by	System Manager
Mode	All
Idle Condition	System idle
Planning Form	Form 2a, System Numbering: Extension Jacks
Factory Setting	Type: DLC
Valid Entries	First or fifth extension jack on MLX module (maximum: two per module; maximum: eight DLCs per system)
Inspect	Yes
Copy Option	No
Console Procedure	Operator→Positions→Direct Line→Dial ext. no.→ Enter or Delete→Store All
PC Procedure	F3→F1→F1→Type ext. no.→F10 or F8→F3

Procedure: Identify or Remove DLC Operator Positions

Console Display/Instructions	Additional Information	PC
▶ **1. Select the Operator menu.**		
System Programming: > Make a selection System Extensions SysRenumber Options Operator Tables LinesTrunks AuxEquip Exit NightSrvce		F3
▶ **2. Select Positions.**		
System Operator: Make a selection Positions Queued Call Hold Timer DLC Hold Exit		F1

Console Display/Instructions **Additional Information** **PC**

▶ 3. Select Direct-Line Console (DLC).

```
System Operator:
Make a selection
Direct Line
Queued Call


Exit
```

If you get the System Busy message, wait for an idle condition or exit system programming and try again later.

F1

▶ 4. Specify the DLC extension as a DLC position.

```
DLC Operator Positions:
Enter extension


Store All        Delete
Backspace
Exit             Enter
```

If no DSS is attached:
SP: “Entering an Extension”

If DSS is attached:
Toggle the red LED on or off as required. Go to Step 6.
On = extension is currently assigned
Flashing = extension can be assigned as a DLC position.
Off = extension cannot be assigned as a DLC position.

▶ 5. Assign or remove the DLC operator extension.

Select Enter or F10
Delete. F8

You may continue to assign or remove DLC operator positions by repeating Steps 4 and 5.

▶ 6. Indicate that you have finished entering all positions.

Select Store All. F3

The session is terminated, and the system restarts. You must enter system programming again to continue.

Lines and Trunks

The procedures in this section are used to assign optional features to individual lines and trunks. The following optional features can be assigned:

- Type of Trunk
- Outmode Signaling for Loop- or Ground-Start Trunks
- Rotary Trunk Digit Transfer
- Disconnect Signaling Reliability
- Toll Type
- Hold Disconnect Interval
- Principal User for Personal Line
- QCC Queue Priority
- QCC Operator to Receive Calls
- Incoming Call Line Identification Delay
- Trunks to Pools Assignment

The Copy Options feature (described at the end of this section) allows you to copy several optional features from an idle trunk. This option eliminates the need to individually enter each feature.

Separate sections cover “DS1 Facilities,” “Tie Trunks,” “DID Trunks,” “PRI Facilities,” and “BRI Facilities.”

A slot is the physical location of the individual module on the control unit. There is a maximum of 17 slots, which are numbered as follows:

- Basic carrier: slots 1 through 5
- First expansion carrier: slots 6 through 11
- Second expansion carrier: slots 12 through 17

A port is a line or trunk jack on the module. Individual modules support different numbers of ports. On any module, port 1 is the lowest physical jack position. Lines connect equipment to the switch, and trunks connect a switch to a switch. Lines and trunks have logical IDs, unique numeric identifiers for each extension and trunk jack in the communications system control unit. Lines are numbered from 1 to 144, while trunks are numbered from 801 to 880. An MLX extension port has two logical IDs for each physical jack.

Type of Trunk

Use this procedure to specify the type of trunk, loop-start (LS) or ground-start (GS), for each outside trunk connected to one of the following modules:

- 400 GS/LS
- 408 GS/LS
- 800 GS/LS
- 408 GS/LS-MLX
- 800 GS/LS-ID (loop-start trunks only)

Any combination of trunk types (all loop-start, all ground-start, or some of each) is permissible.

This procedure is not used for a system registered with a KF registration number (Key or Behind Switch). Ground-start trunks are allowed only for systems with an MF (Hybrid) or PF (PBX) registration number.

Summary: Type of Trunk

Programmable by	System Manager
Mode	All
Idle Condition	Not required
Planning Form	Form 2c, System Numbering: Line/Trunk Jacks
Factory Setting	All Loop-Start
Valid Entries	All Ground, All Loop, Ground-Start, Loop-Start
Inspect	Yes
Copy Option	Yes
Console Procedure	LinesTrunks→LS/GS/DSL→Dial slot no.→Enter→ Select trunk type→Dial port no.→Enter→Exit→Exit
PC Procedure	F4→F1→Type slot no.→F10→Select trunk type→ Type port no.→F10→F5→F5

Procedure: Type of Trunk

Console Display/Instructions **Additional Information** **PC**

▶ 1. Select the Lines and Trunks menu.

```
System Programming:    >
Make a selection
System          Extensions
SysRenumber     Options
Operator        Tables
LinesTrunks     AuxEquip
Exit            NightSrvce
```

F4

▶ 2. Select Loop-Start/Ground-Start/DS1.

```
Lines and Trunks:       >
Make a selection
LS/GS/DS1       PRI
TIE Lines       Copy
TT/LS Disc      RemoteAccss
DID             Pools
Exit            Tool Type
```

F1

▶ 3. Enter the slot number in the control unit that contains the module (*nn* = 1 to 17).

```
Loop/Ground/DS1:
Enter slot number (1-17)



Backspace
Exit            Enter
```

Module is: 400 GS/LS, 408 GS/LS, 408 GS/LS-MLX,800 GS/LS, or 800 GS/LS-ID.

Dial or type [*nn*].

▶ 4. Save your entry.

Select Enter.

F10

Console/Display Instructions **Additional Information** **PC**

▶ 5. Specify the type of trunks connected to the module.

```
**** GS/LS Slot xx:
Select one
GroundStart      All Ground
Loop Start       All Loop


Exit
```

**** = 400 GS/LS, 408 GS/LS, 408 GS/LS-MLX,800 GS/LS, or 800 GS/LS-ID.
xx = slot number entered in Step 3

Select GroundStart or Loop Start and go to Step 6. F1 F2

Or, select All Ground or All Loop and go to Step 9. F6 F7

▶ 6. Enter the port numbers that have ground-start or loop-start trunks connected. 400 GS/LS and 408 ports: *n = 1 to 4; 800 ports: n = 1 to 8.*

```
**** Start Slot xx:
Enter port no. (1-8)



Backspace        Next
Exit             Enter
```

**** = option name selected in Step 5
xx = slot number entered in Step 3

NOTE:
If you get the Trunk Busy message, wait for an idle condition or exit system programming and try again later.

Dial or type [*n*].

▶ 7. Continue to assign trunk types, or go to Step 8.

Select Next. F9

Return to Step 6. The next slot number is displayed on Line 1.

▶ 8. Save your entry.

Select Enter. F10

▶ 9. Return to the System Programming menu.

Select Exit twice. F5 F5

Outmode Signaling for Loop- or Ground-Start Trunks

Use this procedure to identify either touch-tone signaling or rotary-dial signaling for outgoing calls placed by using the specified loop- or ground-start trunk.

NOTE:
Since the factory setting is touch-tone, this procedure is not required if your system has only touch-tone lines/trunks.

Summary: Outmode Signaling for Loop- or Ground-Start Trunks

Programmable by	System Manager
Mode	Loop-Start: All; Ground-Start: Hybrid/PBX only
Idle Condition	Not required
Planning Form	Form 2c, System Numbering: Line/Trunk Jacks
Factory Setting	Touch-tone
Valid Entries	Touch-tone, Rotary
Inspect	No
Copy Option	Yes
Console Procedure	To program a single line/trunk: LinesTrunks→TT/LS Disc→Outmode→Select entry mode→Dial no. of line/trunk→Enter or Delete→ Exit→Exit→Exit To program a block of lines/trunks: LinesTrunks→TT/LS Disc→OutMode→Select block of lines/ trunks→Toggle LED On/Off→Enter or Delete→ Exit→Exit→Exit
PC Procedure	To program a single line/trunk: [F4]→[F3]→[F1]→[F6]→Type no. of the line/trunk→ [F10] or [F8]→[F5]→[F5]→[F5] To program a block of lines/trunks: [F4]→[F3]→[F1]→Select block of lines/trunks→ Toggle letter G On/Off→[F10] or [F8]→[F5]→[F5]→[F5]

Procedure: Outmode Signaling for Loop- or Ground-Start Trunks

Console Display/Instructions	Additional Information	PC

▶ 1. Select the Lines and Trunks menu.

```
System Programming:      >
Make a selection
System          Extensions
SysRenumber     Options
Operator        Tables
LinesTrunks     AuxEquip
Exit            NightSrvce
```

F4

▶ 2. Select Touch-Tone/Loop-Start Disconnect.

```
Lines and Trunks:        >
Make a selection
LS/GS/DSL       PRI
TIE Lines       Copy
TT/LS Disc      RemoteAccss
DID             Pools
Exit            Tool Type
```

F3

▶ 3. Select Outward Dialing Mode.

```
TouchTone/LS Disconnect:
Make a selection
Outmode
LS Disconnect


Exit            Enter
```

F1

▶ 4. Select the outward trunk dial line(s). ● ◆

```
OutTrunk Dial:
Enter Trunks w/TouchTone
Lines 01-20     Entry Mode
Lines 21-40
Lines 41-60
Lines 61-80
Exit
```

For a single line, go to
● Single Line Procedure.

For a block of lines, go to
◆ Block Procedure.

.

● Single Line Procedure

Console/Display Instructions	Additional Information	PC
▶ 1. Specify entry mode.		
Select Entry Mode.		F6
▶ 2. Enter the number of the line/trunk with touch-tone dialing.		
OutTrunk Dial: Enter Trunks w/TouchTone Delete Backspace Exit Enter	Dial or type [*nnn*].	
▶ 3. Assign or remove touch-tone signaling from the line/trunk.		
Select Enter or		F10
Delete.		F8
	You may continue to assign or remove touch-tone signaling from additional lines/trunks by repeating Steps 2 and 3.	
▶ 4. Return to the System Programming menu.		
Select Exit three times.		F5 F5 F5

◆ **Block Procedure**

Console/Display Instructions	Additional Information	PC
▶ **1. Specify the block of 20 lines associated with the 20 line buttons on the system programming console.**		
Select Lines 01-20		F1
Lines 21-40		F2
Lines 41-60		F3
Lines 61-80		F4
▶ **2. Specify touch-tone or rotary signaling for each block.**		
	Toggle the green LED on or off as required. On = touch-tone Off = rotary	
▶ **3. Return to the System Programming menu.**		
Select Exit three times.		F5 F5 F5

Rotary Trunk Digit Transfer

Use this procedure to designate whether dialed digits on rotary-dial lines/trunks are sent one by one as they are dialed (no delay), or are stored and sent when dialing is completed (delay). Contact your service provider for more information about the appropriate setting.

Summary: Rotary Trunk Digit Transfer

Programmable by	System Manager
Mode	All
Idle Condition	Not required
Planning Form	Form 8a, System Features
Factory Setting	No Delay
Valid Entries	Delay, No Delay
Inspect	No
Copy Option	No
Console Procedure	Options→**More**→Rotary→Select option→Enter→Exit
PC Procedure	F7 →PgUp→F4→Select option→F10→F5

Procedure: Rotary Trunk Digit Transfer

Console Display/Instructions	Additional Information	PC

▶ 1. Select the Options menu.

```
System Programming:      >
Make a selection
System          Extensions
SysRenumber     Options
Operator        Tables
LinesTrunks     AuxEquip
Exit            NightSrvce
```

F7

▶ 2. Go to the second screen of the Options menu.

```
Options:                 >
Make a selection
Transfer        Callback
CampOn          Ext Status
CallParkRtn     SMDR
Delay Ring      InsideDial
Exit            ReminderSrv
```

Press **More.** PgUp

▶ 3. Select Rotary.

```
Options:                 >
Make a selection
Unassigned      Cover Delay
BehndSwitch     Inter-Digit
RecallTimer     Ringing Freq
Rotary          SecDT Timer
Exit
```

F4

▶ 4. Specify a delay or no delay.

```
Rotary Operation:
Select one
Delay
No Delay


Exit            Enter
```

Select Delay or F1
No Delay. F2

Console/Display Instructions	Additional Information	PC
▶ **5. Save your entry.**		
Select Enter.		F10
▶ **6. Return to the System Programming menu.**		
Select Exit.		F5

Ringing Frequency

Use this procedure to program the ringing frequency on an 016 T/R module. Contact your service provider for more information about the appropriate setting. The 016 T/R module is available only in Release 4.0 and later.

Summary: Ringing Frequency

Programmable by	System Manager
Mode	All
Idle Condition	Not required
Planning Form	Form 8a, System Features
Factory Setting	20 Hz
Valid Entries	20 Hz, 25 Hz
Inspect	No
Copy Option	No
Console Procedure	Options→**More**→Ringing Freq→dial slot no.→ Select 20Hz or 25Hz→Enter→Exit
PC Procedure	F7→PgUp→F8→type slot no.→F1 or F2→F10→F5

Procedure: Ringing Frequency

Console Display/Instructions	Additional Information	PC
▶ **1. Select the Options menu.**		
System Programming: >		
Make a selection		
System Extensions		
SysRenumber Options		
Operator Tables		
LinesTrunks AuxEquip		
Exit NightSrvce		F7

Console Display/Instructions **Additional Information** **PC**

▶ 2. Go to the second screen of the Options menu.

```
Options:                >
Make a selection
Transfer        Callback
CampOn          Ext Status
CallParkRtn     SMDR
Delay Ring      InsideDial
Exit            ReminderSrv
```

Press **More.** PgUp

▶ 3. Select Ringing Frequency.

```
Options:                >
Make a selection
Unassigned      Cover Delay
BehndSwitch     Inter-Digit
RecallTimer     Ringing Freq
Rotary          SecDT Timer
Exit
```

F8

▶ 4. Enter the slot number of the 016 T/R module (*xx* = 1 to 17).

```
Ringing Frequency
Enter slot number (1-17)

xx
                Delete
Backspace
Exit            Enter
```

Dial or type [*xx*].

▶ 5. Specify 20 Hz or 25 Hz.

```
Ringing Freq:     Slot xx:
Select one
20Hz
25Hz

Exit            Enter
```

xx = slot number entered in Step 4

Select 20Hz or F1
25Hz. F2

Console/Display Instructions	Additional Information	PC
▶ **6. Save your entry.**		
Select Enter.		F10
▶ **7. Return to the System Programming menu.**		
Select Exit.		F5

Second Dial Tone Timer

Use this procedure to program the second dial tone timer. The second dial tone timer sets a delay in providing a dial tone after a star code is dialed to obtain special services from the central office. See the *Feature Reference* for information about programming the second dial tone timer to prevent toll fraud. The second dial tone timer is available only in Release 3.1 and later.

Summary: Second Dial Tone Timer

Programmable by	System Manager
Mode	All
Idle Condition	Not required
Planning Form	Form 8a, System Features
Factory Setting	0 ms
Valid Entries	0–5,000 ms, in increments of 200 ms
Inspect	No
Copy Option	No
Console Procedure	Options→**More**→SecDT→**Drop**→Dial second dial tone timer value→Enter→Exit
PC Procedure	F7→PgUp→F9→Alt+P→Type second dial tone timer value→F10→F5

Procedure: Second Dial Tone Timer

Console Display/Instructions	Additional Information	PC
▶ 1. Select the Options menu.		
System Programming: > Make a selection System Extensions SysRenumber Options Operator Tables LinesTrunks AuxEquip Exit NightSrvce		F7
▶ 2. Go to the second screen of the Options menu.		
Options: > Make a selection Transfer Callback CampOn Ext Status CallParkRtn SMDR Delay Ring InsideDial Exit ReminderSrv	Press **More.**	PgUp
▶ 3. Select Ringing Frequency.		
Options: > Make a selection Unassigned Cover Delay BehndSwitch Inter-Digit RecallTimer Ringing Freq Rotary SecDT Timer Exit		F9
▶ 4. Erase the current second dial tone timer.		
Second Dialtone Timer: Enter timeout (0-5000 ms, increments 200) *xxxx* Backspace Exit Enter	Press **Drop** or Select Backspace.	Alt + P F4

Console/Display Instructions	Additional Information	PC
▶ **5. Enter the second dial tone timer (*nnnn* = 0 to 5,000 ms, in increments of 200 ms).**		
Dial or type [*nnnn*].		⊂
▶ **6. Save your entry.**		
Select `Enter`.		F10
▶ **7. Return to the System Programming menu.**		
Select `Exit`.		F5

Disconnect Signaling Reliability

Use this procedure to classify the disconnect signal sent by the central office on loop-start trunks as one of the following:

- **Reliable.** Signal sent within a short time.
- **Unreliable.** Signal may not be provided.

SECURITY ALERT:
Toll fraud can occur if you have loop-start trunks with unreliable disconnect. In this situation, if someone calls you and you hang up, the CO could send dial tone before the caller hangs up, allowing the caller to place another call as if it originated at your company.

The setting selected applies to all trunks in the system because trunks cannot be programmed individually. The reliable/unreliable setting does not apply to loop-start trunks emulated on a T1 facility. If you specify a reliable disconnect for trunks programmed with a short hold disconnect interval (see "Hold Disconnect Interval" on page 3–67), active calls, as well as trunks on hold, may be disconnected. For more information about reliable and unreliable disconnect and its implications, see the *Feature Reference.*

NOTE:
Certain features (Remote Call Forwarding and Transfer to outside numbers), applications (MERLIN LEGEND Mail, Messaging 2000, and Intuity AUDIX), and private network systems (Release 6.0 and later), are not recommended with loop-start trunks. See "Hold Disconnect Interval" on page 3–67.

Summary: Disconnect Signaling Reliability

Programmable by	System Manager
Mode	All
Idle Condition	Not required
Planning Form	Form 2c, System Numbering: Line/Trunk Jacks
Factory Setting	Unreliable
Valid Entries	Unreliable, Reliable
Inspect	No
Copy Option	No
Console Procedure	LinesTrunks→TT/LS Disc→LS Disconnect→ Yes or No→Enter→Exit→Exit
PC Procedure	F4 → F3 → F2 → F1 or F2 → F10 → F5 → F5

Procedure: Disconnect Signaling Reliability

Console Display/Instructions	Additional Information	PC
▶ 1. Select the Lines and Trunks menu.		
System Programming: > Make a Selection System Extensions SysRenumber Options Operator Tables LinesTrunks AuxEquip Exit NightSrvce		F4
▶ 2. Select Touch-Tone/Loop-Start Disconnect.		
Lines and Trunks: > Make a selection LS/GS/DSL PRI TIE Lines Copy TT/LS Disc RemoteAccss DID Pools Exit Toll Type		F3

Console/Display Instructions **Additional Information** **PC**

▶ 3. Select Loop-Start Disconnect.

```
TouchTone/LS Disconnect:
Make a selection
Outmode
LS Disconnect

Exit
```

F2

▶ 4. Specify the disconnect signal as reliable or unreliable.

```
LS Reliable Disconnect:
Select one
Yes
No

Exit          Enter
```

Select Yes or No. F1 F2

▶ 5. Save your entry.

Select Enter. F10

▶ 6. Return to the System Programming menu.

Select Exit twice. F5 F5

Toll Type

Use this procedure to specify whether users have to dial a toll prefix (1 or 0) before dialing an area code and telephone number. (Your local telephone company should verify toll prefix requirements for each line/trunk.)

This setting is used by the system to classify calls as local or long distance, so that appropriate toll restrictions can be applied.

NOTE:
This option applies only to loop- and ground-start trunks; it does not apply to tie trunks or DID trunks.

Summary: Toll Type

Programmable by	System Manager
Mode	All
Idle Condition	Not required
Planning Form	Form 2c, System Numbering: Line/Trunk Jacks
Factory Setting	Toll prefix required
Valid Entries	Required, Not required
Inspect	No
Copy Option	Yes

Console Procedure	To program a single line/trunk:
	`LinesTrunks`→`Toll Type`→Select entry mode→Dial no. of the line/trunk→`Enter` or `Delete`→`Exit`→`Exit`→`Exit`
	
	To program a block of lines/trunks:
	`LinesTrunks`→`Toll Type`→Select block of lines/trunks→Toggle LED On/Off→`Enter` or `Delete`→`Exit`→`Exit`→`Exit`

PC Procedure	To program a single line/trunk: [F4]→[F10]→[F6]→Type no. of the line/trunk→[F10] or [F8]→[F5]→[F5]→[F5] To program a block of lines/trunks: [F4]→[F10]→Select block of lines/trunk→Toggle letter `G` On/Off→[F10] or [F8]→[F5]→[F5]→[F5]

Procedure: Toll Type

Console Display/Instructions	Additional Information	PC
1. Select the Lines and Trunks menu.		

`System Programming: >`
`Make a selection`
`System Extensions`
`SysRenumber Options`
`Operator Tables`
`LinesTrunks AuxEquip`
`Exit NightSrvce`
		[F4]

Console/Display Instructions **Additional Information** **PC**

▶ 2. Select Toll Type.

```
Lines and Trunks:        >
Make a selection
LS/GS/DSL        PRI
TIE Lines        Copy
TT/LS Disc       RemoteAccss
DID              Pools
Exit             Toll Type
```

F10

▶ 3. Specify the toll type line(s). ● ◆

```
Toll Type:
Enter toll prefix lines
Lines 01-20      Entry Mode
Lines 21-40
Lines 41-60
Lines 61-80
Exit
```

For a single line, go to
● Single Line Procedure.

For a block of lines, go to
◆ Block Procedure.

● Single Line Procedure

Console/Display Instructions **Additional Information** **PC**

▶ 1. Specify entry mode.

Select Entry Mode. F6

▶ 2. Enter the number of the line/trunk that requires a toll prefix (1 or 0) before the area code.

```
Toll:
Enter toll prefix lines
                 Delete
Backspace
Exit             Enter
```

Dial or type [*nn*].

Console/Display Instructions	Additional Information	PC
▶ **3. Assign or remove the toll prefix requirement from the line/trunk.**		
Select Enter or		F10
Delete.		F8
	You may continue to assign or remove the toll prefix requirement from additional lines/trunks by repeating Steps 2 and 3.	
▶ **4. Return to the System Programming menu.**		
Select Exit three times.		F5 F5 F5

◆ **Block Procedure**

Console/Display Instructions	Additional Information	PC
▶ **1. Specify the block of 20 lines associated with 20 buttons on the system programming console.**		
Select Lines 01-20		F1
Lines 21-40		F2
Lines 41-60		F3
Lines 61-80		F4
▶ **2. Specify whether or not a toll prefix is needed.**		
	Toggle the green LED on or off as required. On = toll prefix needed Off = toll prefix not needed	
▶ **3. Return to the System Programming menu.**		
Select Exit three times.		F5 F5 F5

Hold Disconnect Interval

Use this procedure to specify the number of milliseconds before a loop-start line/trunk is released when a caller on hold hangs up and abandons the call. This can be specified as either a long interval (450 ms) or a short interval (50 ms). The hold disconnect interval applies to loop-start trunks; it does not apply to emulated loop-start trunks (T1 facility).

NOTES:

1. If the disconnect interval is longer than the telephone company setting, the line is not released when a caller on hold hangs up.
2. Do not program a short interval unless the local telephone company's central office is the crossbar type.
3. Do not program a reliable disconnect for lines/trunks with a short hold disconnect interval. This can cause active calls as well as lines/trunks on hold to be disconnected. See "Disconnect Signaling Reliability" on page 61.

For more information on Hold Interval Disconnect and Reliable and Unreliable Disconnect, see the *Feature Reference.*

Summary: Hold Disconnect Interval

Programmable by	System Manager
Mode	All
Idle Condition	Not required
Planning Form	Form 2c, System Numbering: Line/Trunk Jacks
Factory Setting	Long interval (450 ms)
Valid Entries	Long interval, Short interval
Inspect	No
Copy Option	No

Console Procedure	To program a single line/trunk:
	`LinesTrunks`→**More**→`HoldDiscnct`→Select entry mode→Dial no. of the line/trunk→`Enter`→`Exit`→`Exit`
	
	To program a block of lines/trunks:
	`LinesTrunks`→**More**→`HoldDiscnct`→Select block of lines/trunks→Toggle LED On/Off→`Enter`→`Exit`→`Exit`

PC Procedure	To program a single line/trunk: [F4]→[PgUp]→[F1]→[F6]→Type no. of the line/trunk→[F10]→[F5]→[F5] To program a block of lines/trunks: [F4]→[PgUp]→[F1]→Select block of lines/trunks→Toggle letter `G` On/Off→[F10]→[F5]→[F5]

Procedure: Hold Disconnect Interval

Console Display/Instructions **Additional Information** **PC**

▶ 1. Select the Lines and Trunks menu.

```
System Programming:      >
Make a selection
System          Extensions
SysRenumber     Options
Operator        Tables
LinesTrunks     AuxEquip
Exit            NightSrvce
```

F4

▶ 2. Go to the second screen of the Lines and Trunks menu.

```
Lines and Trunks:        >
Make a selection
LS/GS/DSL       PRI
TIE Lines       Copy
TT/LS Disc      RemoteAccss
DID             Pools
Exit            Toll Type
```

Press **More.** PgUp

▶ 3. Select Hold Disconnect Interval.

```
Lines and Trunks:        >
Make a selection
HoldDiscnct     LS-ID Delay
PrncipalUsr     ClockSync
QCC Prior       BRI
QCC Oper        T1 Data NW
Exit            UDP
```

F1

▶ 4. Specify the hold disconnect line(s). ● ◆

```
Hold Disconnect:
Lines w/long interval
Lines 01-20     Entry Mode
Lines 21-40
Lines 41-60
Lines 61-80
Exit
```

For a single line, go to
● Single Line Procedure.

For a block of lines, go to
◆ Block Procedure.

● Single Line Procedure

Console/Display Instructions	Additional Information	PC
▶ 1. Specify entry mode.		
Select Entry Mode.		F6
▶ 2. Enter the number of the line or trunk with a long disconnect interval.		
Hold Disconnect: Enter lines/trunks with long interval Delete Backspace Exit Enter	Dial or type [*nnn*].	
▶ 3. Assign or remove the line/trunk.		
Select Enter or		F10
Delete.		F8
	You may continue to assign or remove a long disconnect interval from additional lines/trunks by repeating Steps 2 and 3.	
▶ 4. Return to the System Programming menu.		
Select Exit three times.		F5 F5 F5

◆ **Block Procedure**

Console/Display Instructions	Additional Information	PC
▶ **1. Specify the block of 20 lines associated with 20 buttons on the system programming console.**		
Select Lines 01-20		F1
Lines 21-40		F2
Lines 41-60		F3
Lines 61-80		F4
▶ **2. Specify touch-tone or rotary signaling for each block.**		
	Toggle the green LED on or off as required. On = long hold disconnect interval Off = short hold disconnect interval	
▶ **3. Return to the System Programming menu.**		
Select Exit three times.		F5 F5 F5

Principal User for Personal Line

Use this procedure to assign or remove one telephone as principal user for a personal line. When a telephone with Remote Call Forwarding activated is assigned as principal user, calls received on the personal line are forwarded to an outside telephone number. In addition, calls received on that line are sent to that telephone's individual and/or Group Coverage receivers unless the personal line button is set to No Ring.

The principal user assignment must be removed before the trunk can be removed from a button on the telephone.

When no principal user is assigned for a personal line, calls received on the personal line are not forwarded to outside telephone numbers; calls received on the personal line follow the coverage patterns for all users who share the line.

Summary: Principal User for Personal Line

Programmable by	System Manager
Mode	All
Idle Condition	Not required
Planning Form	Form 4b, Analog Multiline Telephone Form 4d, MLX Telephone Form 4e, MFM Adjunct: MLX telephone Form 4f, Tip/Ring Equipment Form 5a, Direct-Line Console (DLC): Analog Form 5b, Direct-Line Console (DLC): Digital Form 5c, MFM Adjunct: DLC
Factory Setting	No principal user
Valid Entries	Not applicable
Inspect	No
Copy Option	No
Console Procedure	LinesTrunks→**More**→PrncipalUsr→Dial line/trunk no.→Enter→Dial ext. no.→Enter or Delete→Exit→Exit
PC Procedure	F4→PgUp→F2→Type line/trunk no.→F10→Type ext. no.→F10 or F8→F5→F5

Procedure: Principal User for Personal Line

Console Display/Instructions	Additional Information	PC

1. Select the Lines and Trunks menu.

```
System Programming:        >
Make a selection
System          Extensions
SysRenumber     Options
Operator        Tables
LinesTrunks     AuxEquip
Exit            NightSrvce
```

F4

2. Go to the second screen of the Lines and Trunks menu.

```
Lines and Trunks:          >
Make a selection
LS/GS/DSL       PRI
TIE Lines       Copy
TT/LS Disc      RemoteAccss
DID             Pools
Exit            Toll Type
```

Press **More**. PgUp

Console/Display Instructions **Additional Information** **PC**

▶ 3. Select Principal User.

```
Lines and Trunks:        >
Make a selection
HoldDiscnct      LS-ID Delay
PrncipalUsr      ClockSync
QCC Prior        BRI
QCC Oper         T1 Data NW
Exit             UDP
```

F2

▶ 4. Enter the line or trunk number to which you are assigning a principal user.

```
Principal User:
Enter line/trunk number

Exit             Enter
```

Dial or type:
Trunk number [*nnn*]
Slot and port number ∗[*sspp*]
Logical ID number #[*nnn*]

▶ 5. Save your entry.

Select Enter. F10

▶ 6. Enter the extension assigned as principal user for the specified line.

```
Line/Trunk xxx:
Enter principal ext for
Remote Forward/Coverage

                 Delete
Backspace        Next
Exit             Enter
```

xxx = line/trunk number entered in Step 4

SP: “Entering an Extension”

▶ 7. Assign or remove the extension as principal user.

Select Enter or F10
Delete. F8

Console/Display Instructions	Additional Information	PC
▶ **8. Continue to assign a principal user to another line or trunk, or go to Step 9.**		
Select Next.		F9
	Return to Step 6. The next line/trunk is displayed on Line 1.	
▶ **9. Save your entry.**		
Select Enter.		F10
▶ **10. Return to the System Programming menu.**		
Select Exit twice.		F5 F5

QCC Queue Priority Level

Use this procedure to assign QCC queue priority level values (1 to 7) to each loop-start, ground-start, and automatic-in tie trunk in your system. The value assigned determines the order in which calls are sent to the QCC operator positions. Call priority 1 is the highest priority, and 7 is the lowest priority.

NOTE:
This procedure applies to Hybrid/PBX mode only in a system that includes QCC operator positions.

Summary: QCC Queue Priority Level

Programmable by	System Manager
Mode	Hybrid/PBX
Idle Condition	Not required
Planning Form	Form 2c, System Numbering: Line/Trunk Jacks
Factory Setting	4
Valid Entries	1 to 7
Inspect	Yes
Copy Option	No

Console Procedure To program a single line/trunk:
LinesTrunks→**More**→QCC Prior→Dial priority level→
Enter→Select entry mode→Dial trunk no.→
Enter→Exit→Exit

To program a block of lines/trunks:
LinesTrunks→**More**→QCC Prior→Dial priority level→
Enter→Select block of lines→Toggle LED On/Off→
Enter→Exit→Exit

PC Procedure To program a single line/trunk:
F4→PgUp→F3→Type priority level→Select entry mode→
Type trunk no.→F10→F5→F5

To program a block of lines/trunks:
F4→PgUp→F3→Type priority level→F10→Select block of
lines→Toggle letter G On/Off→F10→F5→F5

Procedure: QCC Queue Priority Level

Console Display/Instructions	Additional Information	PC

1. Select the Lines and Trunks menu.

```
System Programming:      >
Make a selection
System          Extensions
SysRenumber     Options
Operator        Tables
LinesTrunks     AuxEquip
Exit            NightSrvce
```

F4

2. Go to the second screen of the Lines and Trunks menu.

```
Lines and Trunks:        >
Make a selection
LS/GS/DSL       PRI
TIE Lines       Copy
TT/LS Disc      RemoteAccss
DID             Pools
Exit            Toll Type
```

Press **More**. PgUp

Console/Display Instructions **Additional Information** **PC**

▶ 3. Select QCC Queue Priority.

```
Lines and Trunks:        >
Make a selection
HoldDiscnct      LS-ID Delay
PrncipalUsr      ClockSync
QCC Prior        BRI
QCC Oper         T1 Data NW
Exit             UDP
```

F3

▶ 4. Enter the QCC priority level (*n* = 1 to 7).

```
QCC Priority:
Enter queue priority
(1-7)



Backspace
Exit             Enter
```

Dial or type [*n*].

▶ 5. Save your entry.

Select Enter.

F10

▶ 6. Specify the QCC priority lines. ● ◆

```
QCC Priority x :
Enter line/trunk number
Lines 01-20      Entry Mode
Lines 21-40
Lines 41-60
Lines 61-80
Exit
```

x = QCC queue priority entered in Step 4

For a single line, go to
● Single Line Procedure.

For a block of lines, go to
◆ Block Procedure.

● Single Line Procedure

Console/Display Instructions	Additional Information	PC
▶ **1. Specify entry mode.**		
Select Entry Mode.		F6
▶ **2. Enter the line or trunk with the specified queue priority.**		
QCC Priority *x*: Enter line/trunk number Delete Backspace Next Exit Enter	Dial or type: Trunk number [*nnn*] Slot and port number ∗[*sspp*] Logical ID number #[*nnn*]	
▶ **3. Assign or remove the line/trunk from the specified QCC priority level.**		
Select Enter or		F10
Delete.		F8
	You may continue to assign or remove the QCC priority level from additional lines/trunks by repeating Steps 2 and 3.	
▶ **4. Continue to assign or remove lines or trunks, or go to Step 5.**		
Select Next.		F9
	Return to Step 2. The next QCC priority level is displayed on Line 1.	
▶ **5. Save your entry.**		
Select Enter.		F10
▶ **6. Return to the System Programming menu.**		
Select Exit twice.		F5 F5

◆ **Block Procedure**

Console Display/Instructions	Additional Information	PC
▶ **1. Specify the block of 20 lines associated with the 20 line buttons on the system programming console.**		
Select Lines 01-20		F1
Lines 21-40		F2
Lines 41-60		F3
Lines 61-80		F4
▶ **2. Assign the queue priority specified.**		
	Toggle the green LED on or off as required. On = to assign the queue priority Off = not to assign the queue priority	
▶ **3. Return to the System Programming menu.**		
Select Exit twice.		F5 F5

QCC Operator to Receive Calls

Use this procedure to specify whether or not incoming calls on each line/trunk ring into the QCC queue and to identify the QCC system operator positions that receive incoming calls on each line/trunk.

NOTES:

1. This procedure applies to Hybrid/PBX mode only in a system that includes QCC operator positions.
2. Each ground-start, loop-start, or automatic-in tie trunk programmed to ring into the QCC queue can be associated with one or more QCC operator positions.
3. If a trunk assigned to ring into the QCC queue is also used for shared remote access, see "Remote Access Features" on page 3–502 for instructions. You must assign remote access before you assign a QCC system operator to receive calls. See "QCC Operator to Receive Call Types" on page 3–379 for more information.
4. Do not change the factory setting of No QCC Operator Assigned to Receive Calls for trunks dedicated to incoming calls for calling groups, trunks used as personal lines, DID trunks, unequipped DS1 trunks, or dial-in tie trunks.

Summary: QCC Operator to Receive Calls

Programmable by.	System Manager
Mode	Hybrid/PBX
Idle Condition	Not required
Planning Form	Form 2c, System Numbering: Line/Trunk Jacks
Factory Setting	No QCC operator is assigned to receive calls.
Valid Entries	Extension number of first or fifth extension jack
Inspect	Yes
Copy Option	No
Console Procedure	To program a single line/trunk: LinesTrunks→**More**→QCC Oper→Dial ext. no.→ Enter→Select entry mode→Dial line/trunk no.→ Enter→Exit→Exit To program a block of lines/trunks: LinesTrunks→**More**→QCC Oper→Dial ext. no.→ Enter→Select block of lines/trunks→Toggle LED On/Off→ Enter→Exit→Exit
PC Procedure	To program a single line/trunk: F4→PgUp→F4→Type ext. no.→F10→F6→ Type line/trunk no.→F10→F5→F5 To program a block of lines/trunks: F4→PgUp→F4→Type ext. no.→F10→ Select block of lines/trunks→Toggle letter G On/Off→F10→F5→F5

Procedure: QCC Operator to Receive Calls

Console Display/Instructions	Additional Information	PC
▶ **1. Select the Lines and Trunks menu.**		
System Programming: > Make a selection System Extensions SysRenumber Options Operator Tables LinesTrunks AuxEquip Exit NightSrvce		F4

Console/Display Instructions **Additional Information** **PC**

▶ 2. Go to the second screen of the Lines and Trunks menu.

```
Lines and Trunks:        >
Make a selection
LS/GS/DSL       PRI
TIE Lines       Copy
TT/LS Disc      RemoteAccss
DID             Pools
Exit            Toll Type
```

Press **More**. PgUp

▶ 3. Select QCC Operator.

```
Lines and Trunks:        >
Make a selection
HoldDiscnct
PrncipalUsr
QCC Prior
QCC Oper
Exit
```

F4

▶ 4. Specify the QCC operator extension.

```
QCC Operator:
Enter QCC operator
extension number



Backspace
Exit            Enter
```

If no DSS is attached:
SP: “Entering an Extension”

If DSS is attached:
Toggle the red LED on or off as required. Go to Step 6.
On = operator receiving calls
Off = operator not receiving calls

▶ 5. Save your entry.

Select Enter. F10

Console/Display Instructions **Additional Information** **PC**

▶ 6. Specify the line(s) associated with the QCC operator. ● ◆

```
QCC Operator xxxx:
Enter line/trunk number
Lines 01-20      Entry Mode
Lines 21-40
Lines 41-60
Lines 61-80
Exit
```

xxxx = extension number entered in Step 4

For a single line/trunk, go to
● Single Line Procedure.

For a block of lines/trunks, go to
◆ Block Procedure.

● Single Line Procedure

Console/Display Instructions **Additional Information** **PC**

▶ 1. Specify entry mode.

Select Entry Mode. F6

▶ 2. Enter the line/trunk assigned to ring into the QCC queue.

```
QCC Operator xxxx:
Enter line/trunk number

                 Delete
Backspace        Next
Exit             Enter
```

xxxx = extension number entered in Step 4

Dial or type:
Trunk number [*nnn*]
Slot and port number ∗[*sspp*]
Logical ID number #[*nnn*]

▶ 3. Assign or remove the line/trunk from the specified QCC operator.

Select Enter or F10
Delete. F8

You may continue to assign or remove additional lines/trunks from the QCC operator by repeating Steps 2 and 3.

▶ 4. Continue to assign line/trunk to another QCC operator or go to Step 5.

Select Next. F9

Return to Step 2. The next QCC operator is displayed on Line 1.

▶ 5. Return to the System Programming menu.

Select Exit twice. F5 F5

◆ **Block Procedure**

Console/Display Instructions	Additional Information	PC
▶ **1. Specify the block of 20 lines associated with the 20 line buttons on the system programming console.**		
Select Lines 01-20		F1
Lines 21-40		F2
Lines 41-60		F3
Lines 61-80		F4
▶ **2. Assign or remove the lines for the specified QCC operator.**		
	Toggle the green LED on or off as required. On = operator receiving calls Off = operator not receiving calls	
▶ **3. Return to the System Programming menu.**		
Select Exit twice.		F5 F5

Loop-Start Identification Delay

Use this procedure to delay the alerting (ringing) of calls arriving at all extensions that are on loop-start lines/trunks connected to an 800 GS/LS-ID module, until approximately six seconds have elapsed since the port module informed the system software that the line was ringing, or until the system software has been informed that Caller ID information is available, whichever comes first.

This option can be programmed on a per-trunk basis. It gives the appearance to the users that the Caller-ID information is available the moment the call arrives at the extension, and prevents applications or adjuncts from answering the call too soon.

The LS-ID Delay setting appears on the Ground-Start/Loop-Start Trunk Information report.

Any extension or adjunct that answers an incoming CO line on the first ring causes the Caller ID information associated with the call to be lost. The adjunct must be programmed to either answer the call on the second (or later) ring, or delay the call. The call can be delayed either by setting the ring option on the buttons associated with the adjunct or by using the LS-ID Delay option.

NOTE:
Caller-ID information is not available on ground-start lines/trunks.

Summary: Loop-Start Identification Delay

Programmable by	System Manager
Mode	All
Idle Condition	Not required
Planning Form	Form 2c, System Numbering: Line/Trunk Jacks
Factory Setting	No delay
Valid Entries	Loop-start line/trunk numbers
Inspect	Yes
Copy Option	Yes, but only to the same trunk type
Console Procedure	To program a single line/trunk: LinesTrunks→**More**→LS-ID Delay→Select entry mode→ Dial no. of the line/trunk→Enter→Exit→Exit To program a block of lines/trunks: LinesTrunks→**More**→LS-ID Delay→Select block of lines/ trunks→Toggle LED On/Off→Enter→Exit→Exit
PC Procedure	To program a single line/trunk: [F4]→[PgUp]→[F6]→[F6]→Type no. of the line/trunk→ [F10]→[F5]→[F5] To program a block of lines/trunks: [F4]→[PgUp]→[F6]→Select block of lines/trunks→ Toggle letter G On/Off→[F10]→[F5]→[F5]

Procedure: Loop-Start Identification Delay

Console/Display Instructions	Additional Information	PC
▶ **1. Select the Lines and Trunks menu.**		
System Programming: > Make a selection System Extensions SysRenumber Options Operator Tables LinesTrunks AuxEquip Exit NightSrvce		[F4]

Console/Display Instructions **Additional Information** **PC**

▶ **2. Go to the second screen of the Lines and Trunks menu.**

```
Lines and Trunks:        >
Make a selection
LS/GS/DSL       PRI
TIE Lines       Copy
TT/LS Disc      RemoteAccss
DID             Pools
Exit            Toll Type
```

Press **More.** PgUp

▶ **3. Select Loop-Start Identification Delay.**

```
Lines and Trunks:        >
Make a selection
HoldDiscnct     LS-ID Delay
PrncipalUsr     ClockSync
QCC Prior       BRI
QCC Oper        T1 Data NW
Exit            UDP
```

F6

▶ **4. Specify the line(s) for LS-ID Delay.** ●◆

```
LS-ID Delay  :
Enter Trks w/LS-ID Delay
Lines 01-20     Entry Mode
Lines 21-40
Lines 41-60
Lines 61-80
Exit
```

For a single line/trunk, go to
● Single Line Procedure.

For a block of lines/trunks, go to
◆ Block Procedure.

● Single Line Procedure

Console Display/Instructions **Additional Information** **PC**

▶ **1. Specify entry mode.**

Select Entry Mode. F6

▶ **2. Enter the line/trunk number for LS-ID Delay.**

```
LS-ID Delay:
Enter Trunk Number for
Alert Delay

                Delete
Backspace
Exit            Enter
```

Dial or type:
Trunk number [*nnn*]
Slot and port number *[*sspp*]
Logical ID number #[*nnn*]

Console Display/Instructions	Additional Information	PC
▶ **3. Assign or remove the LS-ID Delay.**		
Select Enter or		F10
Delete.		F8
	You may continue to assign or remove the LS-ID delay from additional lines/trunks by repeating Steps 2 and 3.	
▶ **4. Return to the System Programming menu.**		
Select Exit twice.		F5 F5

◆ **Block Procedure**

Console/Display Instructions	Additional Information	PC
▶ **1. Specify the block of 20 lines associated with the 20 line buttons on the system programming console.**		
Select Lines 01-20		F1
Lines 21-40		F2
Lines 41-60		F3
Lines 61-80		F4
▶ **2. Assign the LS-ID Delay to the appropriate lines/trunks.**		
	Toggle the green LED on or off as required. On = assign the LS-ID Delay Off = remove the LS-ID Delay	
▶ **3. Return to the System Programming menu.**		
Select Exit twice.		F5 F5

Clock Synchronization

NOTE:
The following information is for planning clock synchronization in systems that are not part of a private network. For planning clock synchronization in a private network configuration, see the *Network Reference*.

Use this procedure to specify the primary, secondary, and tertiary clock source. A clock source may be either a 100D module or a port on an 800 NI-BRI module. See the *Feature Reference* for more information about the appropriate setting. If the clock is taken from a 100D module, you can also specify whether the clock is synchronized to the outside endpoint (loop) or to the clock reference source (local).

NOTE:
This procedure is necessary only if your system includes an 800 NI-BRI module or more than one 100D module.

Summary: Clock Synchronization

Programmable by	System Manager
Mode	All
Idle Condition	Not required
Planning Form	Form 3b, Incoming Trunks: DS1 Connectivity 100D module Form 3i, Incoming Trunks: BRI Options
Factory Setting	Primary clock: the first 100D module in the control unit carrier
Valid Entries	Primary, Secondary, Tertiary, Loop/Local
Inspect	No
Copy Option	No
Console Procedure	`LinesTrunks`→**More**→`ClockSync`→`Primary`→Dial slot no.→`Enter`→Dial port no. or Select source of synchronization→`Enter`→`Secondary`→Dial slot no.→`Enter`→Dial port no. or Select source of synchronization→`Enter`→`Tertiary`→Dial slot no.→`Enter`→Dial port no. or Select source of synchronization→`Enter`→`Exit`→`Exit`
PC Procedure	[F4]→[PgUp]→[F7]→[F1]→Type slot no.→[F10]→Type port no. or Select source of synchronization→[F10]→[F2]→Type slot no.→[F10]→Type port no. or Select source of synchronization→[F10]→[F3]→Type slot no.→[F10]→Type port no. or Select source of synchronization→[F10]→[F5]→[F5]

Procedure: Clock Synchronization

Console Display/Instructions	Additional Information	PC
1. Select the Lines and Trunks menu.		
System Programming: > Make a selection System Extensions SysRenumber Options Operator Tables LinesTrunks AuxEquip Exit NightSrvce		F4
2. Go to the second screen of the Lines and Trunks menu.		
Lines and Trunks: > Make a selection LS/GS/DSL PRI TIE Lines Copy TT/LS Disc RemoteAccss DID Pools Exit Toll Type	Press **More**.	PgUp
3. Select Clock Synchronization.		
Lines and Trunks: > Make a selection HoldDiscnct LS-ID Delay PrncipalUsr ClockSync QCC Prior BRI QCC Oper T1 Data NW Exit UDP		F7
4. Select Primary.		
Clock Syncronization: Make a selection Primary Secondary Tertiary Exit		F1

Console/Display Instructions **Additional Information** **PC**

▶ **5. Enter the slot number of the module to contain the primary system clock.**

```
Primary System Clock
Enter slot number (1-17)

xx
                Delete
Backspace
Exit            Enter
```

Dial or type [*xx*].

▶ **6. Save your entry.**

Select Enter. F10

If the slot selected in Step 5 contains a 100D module, continue with Step 7.

If the slot selected in Step 5 contains an 800 NI-BRI module, go to Step 8.

▶ **7. Specify whether the clock is to be synchronized to an outside endpoint (loop) or is to be free running (local), then go to Step 9.**

```
Primry ClkSource Slot xx:
Select one
Loop
Local

Exit            Enter
```

xx = slot number entered in Step 5

Select Loop or F1
Local. F2

▶ **8. Select the 800 NI-BRI module port to be the primary clock source.**

```
Primary Loop Clk Slot xx:
Enter port number (1-8)

x

Backspace
Exit            Enter
```

Dial or type [*x*].

▶ **9. Save your entry.**

Select Enter. F10

Console/Display Instructions	Additional Information	PC

▶ 10. Select Secondary.

```
Clock Syncronization:
Make a selection
Primary
Secondary
Tertiary

Exit
```

F2

▶ 11. Enter the slot number of the module to contain the secondary system clock.

```
Secondary System Clock
Enter slot number (1-17)

xx
                Delete
Backspace
Exit            Enter
```

Dial or type [*xx*].

▶ 12. Save your entry.

Select Enter. F10

If the slot selected in Step 11 contains a 100D module, continue with Step 13.
If the slot selected in Step 11 contains an 800 NI-BRI module, go to Step 14.

▶ 13. Specify whether the clock is to be synchronized to an outside endpoint (loop) or is to be free running (local), then go to Step 15.

```
SecondaryClkSource Slotxx:
Select one
Loop
Local

Exit            Enter
```

xx = slot number entered in Step 11

Select Loop or F1
Local. F2

Console/Display Instructions **Additional Information** **PC**

▶ 14. Select the 800 NI-BRI module port to be the secondary clock source.

```
Secondary Loop ClkSlot xx:
Enter port number (1-8)

x

Backspace
Exit            Enter
```

Dial or type [*x*].

▶ 15. Save your entry.

Select Enter. F10

▶ 16. Select Tertiary.

```
Clock Syncronization:
Make a selection
Primary
Secondary
Tertiary

Exit
```

F3

▶ 17. Enter the slot number of the module to contain the tertiary system clock.

```
Tertiary System Clock
Enter slot number (1-17)

xx
                Delete
Backspace
Exit            Enter
```

Dial or type [*xx*].

▶ 18. Save your entry.

Select Enter. F10

If the slot selected in Step 17 contains a 100D module, continue with Step 19.
If the slot selected in Step 17 contains an 800 NI-BRI module, go to Step 20.

Console/Display Instructions	Additional Information	PC
▶ **19. Specify whether the clock is to be synchronized to an outside endpoint (loop) or is to be free running (local), then go to Step 21.**		
Tertry ClkSource Slot *xx*: Select one Loop Local Exit Enter	*xx* = slot number entered in Step 17	
	Select Loop or Local.	F1 F2
▶ **20. Select the port on the 800 NI-BRI module to be the tertiary clock source.**		
Tertiary LoopClk Slot *xx*: Enter port number (1-8) *x* Backspace Exit Enter	Dial or type [*x*].	
▶ **21. Save your entry.**		
Select Enter.		F10
▶ **22. Return to the System Programming menu.**		
Select Exit twice.		F5 F5

Trunks to Pools Assignment

Use this procedure to create trunk pools (groups of outside lines/trunks connected to the system). Trunk pools are used to specify preferred routes for Automatic Route Selection (ARS). In addition, trunk pools enable users to select a line/trunk by dialing a pool dial-out code or by pressing a single button on the telephone. (A separate button for each line/trunk is not needed.) Each pool should contain trunks of the same type (for example, loop- or ground-start or WATS); however, ground- and loop-start trunks of the same type can be included in the same pool. Ground-start trunks must be manually assigned. A maximum of 11 trunk pools is allowed. A trunk can be assigned to only one pool.

Do not mix different service areas of WATS (Wide Area Telecommunications Service) trunks or FX (Foreign Exchange) lines to different cities. Do not include both incoming-only and outgoing-only lines/trunks in the same pool.

In Release 6.0 and later systems (Hybrid/PBX mode only), when dialing 10*** and 101**** equal access (Interexchange Carrier or IXC) calls via a private networked switch that is not connected to the public switched network, the private trunks must be assigned to the main pool. When routing Dial 0 and N11 calls via this type of networked switch, the private trunks must be assigned to the main pool containing private network trunks. For more information, see "Automatic Route Selection" on page 3–528.

If you want to reassign a line/trunk to a different pool, you must remove it from the current pool before you assign it to the new pool. Once you assign a line/trunk to a pool, it can be assigned to a button only on a direct-line console operator position; individual lines intended for personal use on telephones other than the DLC console should not be assigned to pools.

DID trunks cannot be grouped in pools. Loop-start trunks are automatically placed in pools and must be removed manually if used for paging loudspeakers, Music on Hold, or maintenance alarms.

Dial-in tie trunks should not be grouped in pools if you intend to assign **Pool** buttons on telephones.

SECURITY ALERT:
*In Release 6.0 and later systems (Hybrid/PBX mode only), do not assign pools of non-local tie or PRI tandem trunks to **Pool** buttons or DSS buttons, or allow dial access to them. When callers in your system need to use these pools for outside calls, use ARS to direct the calls to these pools. Callers in your system use normal calling procedures to reach extensions on private networked systems.*

If you are using Automatic Route Selection, the main pool (factory-set dial-out code 70) must contain loop- or ground-start trunks.

The system provides an error tone when a line/trunk is in use, or if a loudspeaker paging system, Music on Hold, or maintenance alarm is already assigned; however, the system does not indicate the reason for the error tone.

NOTE:
This procedure applies to Hybrid/PBX mode only.

Summary: Trunks to Pools Assignment

Programmable by	System Manager
Mode	Hybrid/PBX
Idle Condition	Trunk idle
Planning Form	Form 2c, System Numbering: Line/Trunk Jacks
Factory Setting	All loop-start trunks are assigned to the main trunk pool (factory-set extension number 70); all tie trunks are assigned to the trunk pool with the factory-set extension number 891. No factory-set extension numbers are assigned to ground-start trunks.
Valid Entries	Line numbers
Inspect	Yes
Copy Option	Yes
Console Procedure	To program a single line/trunk: `LinesTrunks`→`Pools`→Dial pool dial-out code→ Select entry mode→Dial no. of the line/trunk→ `Enter`→`Exit`→`Exit` To program a block of lines/trunks: `LinesTrunks`→`Pools`→Dial pool dial-out code→ Select block of lines/trunks→Toggle LED On/Off→ `Enter`→`Exit`→`Exit`
PC Procedure	To program a single line/trunk: [F4]→[F9]→Type pool dial-out code→[F10]→[F6]→ Type no. of the line/trunk→[F10]→[F5]→[F5] To program a block of lines/trunks: [F4]→[F9]→Type pool dial-out code→[F10]→Select block of lines/trunks→Toggle letter R On/Off→[F10]→[F5]→[F5]

Procedure: Trunks to Pools Assignment

Console Display/Instructions	Additional Information	PC

1. Select the Lines and Trunks menu.

```
System Programming:      >
Make a selection
System          Extensions
SysRenumber     Options
Operator        Tables
LinesTrunks     AuxEquip
Exit            NightSrvce
```

F4

2. Select Pools.

```
Lines and Trunks:        >
Make a selection
LS/GS/DSL       PRI
TIE Lines       Copy
TT/LS Disc      RemoteAccss
DID             Pools
Exit            Toll Type
```

F9

3. Enter the pool number.

```
Pools:
Enter pool number



Backspace
Exit            Enter
```

Dial or type [*nnn*].

4. Save your entry.

Select Enter.

F10

5. Specify the pool line(s). ● ◆

```
Pool xxx:
Assign lines to pool
Lines 01-20     Entry Mode
Lines 21-40
Lines 41-60
Lines 61-80
Exit
```

xxx = pool dial-out code entered in Step 3

For a single line/trunk, go to
● Single Line Procedure.

For a block of lines/trunks, go to
◆ Block Procedure.

● Single Line Procedure

Console Display/Instructions	Additional Information	PC
▶ 1. Specify entry mode.		
Select Entry Mode.		F6
▶ 2. Enter the line/trunk number for the pool.		
Pool *xxx*: Enter line/trunk number Delete Backspace Exit Enter	*xxx* = pool dial-out code entered in Step 3 Dial or type: Trunk number [*nnn*] Slot and port number ∗[*sspp*] Logical ID number #[*nnn*]	
▶ 3. Assign or remove the line/trunk from the pool.		
Select Enter or Delete.		F10 F8
	You may continue to assign or remove additional lines/trunks from the pool by repeating Steps 2 and 3.	
▶ 4. Return to the System Programming menu.		
Select Exit twice.		F5 F5

◆ Block Procedure

Console Display/Instructions	Additional Information	PC
▶ 1. Specify the block of 20 lines associated with the 20 line buttons on the system programming console.		
Select Lines 01-20 Lines 21-40 Lines 41-60 Lines 61-80		F1 F2 F3 F4
▶ 2. Assign the appropriate lines/trunks to the pool.		
	Toggle the red LED on or off as required. On = trunk is assigned to specified pool Off = trunk is not assigned to specified pool	
▶ 3. Return to the System Programming menu.		
Select Exit twice.		F5 F5

Copy Options for Lines/Trunks

Use this procedure to copy options assigned to loop-start or ground-start trunks, tie trunks, or DID trunks. Note that many of these options apply to Hybrid/PBX systems only. The following information is copied for each line/trunk type:

- **Loop-Start or Ground-Start Trunks** (including those emulated on T1 facilities). Toll type, signaling type, and trunk pool assignment (Hybrid/PBX only).
- **Tie Trunks**. Direction, tie trunk type, E&M signal, dial mode, dial tone, answer supervision time, disconnect time, and trunk pool assignment (Hybrid/PBX only).
- **DID Trunks** (Hybrid/PBX only). Block assignment and disconnect time.

To find out whether there is an optional feature assigned that you would like to copy, use **Inspct** from the system programming console, or PgDn on a PC.

NOTES:

1. You can copy options to a block of lines/trunks only if they are all of the same type (loop-start, ground-start, Tie, or DID). If you attempt to copy assignments and there is a mismatch in line/trunk type, information is copied to that point only. You receive no error message.
2. In Release 6.0 and later systems, options cannot be copied from private lines/trunks.
3. If you are copying options to a block of lines/trunks, they must be sequentially numbered.
4. If the block you are copying to includes an invalid line/trunk type, the copying process stops at the invalid type. Only the lines/trunks that were copied to before the invalid type was found are copied successfully.
5. If you are copying assignments to a block of lines/trunks and one of the lines or trunks is in use, you see the message `Trunk Busy - Pls wait` on your display. The copying for the rest of the lines/trunks in the block is delayed until the busy line/trunk becomes idle. If you exit without waiting for the copying to complete, the copying done up to that point is not canceled.

Summary: Copy Options for Lines/Trunks

Programmable by	System Manager
Mode	All (but note differences)
Idle Condition	Not required
Planning Form	Form 2c, System Numbering: Line/Trunk Jacks Form 3c, Incoming Trunks: TIE Form 3d, Incoming Trunks: DID
Factory Setting	Not applicable
Valid Entries	Not applicable
Inspect	No
Copy Option	Not applicable
Console Procedure	To copy individual lines/trunks: LinesTrunks→Copy→Single→Dial copy-from trunk no.→ Enter→Dial copy-to trunk no.→Enter→Exit→ Exit→Exit To copy blocks of lines/trunks: LinesTrunks→Copy→Block→Dial copy-from trunk no.→ Enter→Dial first copy-to trunk no. in block→Enter→Dial last copy-to trunk no. in block→Enter→Exit→Exit→Exit
PC Procedure	To copy individual lines/trunks: F4 → F7 → F1 →Type copy to trunk no.→F10 → Type copy-from trunk no.→F10 → F5 → F5 → F5 To copy blocks of lines/trunks: F4 → F7 → F2 →Type copy-from trunk no.→Type first copy-to trunk no. in block→F10 → F5 →Type last copy-to trunk no. in block→F10 → F5 → F5 → F5

Procedure: Copy Options for Lines and Trunks

Console Display/Instructions	Additional Information	PC
▶ 1. Select the Lines and Trunks menu.		
System Programming: > Make a selection System Extensions SysRenumber Options Operator Tables LinesTrunks AuxEquip Exit NightSrvce		F4

Console/Display Instructions **Additional Information** **PC**

▶ **2. Select Copy.**

```
Lines and Trunks:        >
Make a selection
LS/GS/DSL       PRI
TIE Lines       Copy
TT/LS Disc      RemoteAccss
DID             Pools
Exit            Toll Type
```

F7

▶ **3. Specify trunk(s).** ● ◆

```
Copy Trunks:
Make a selection
Single
Block

Exit
```

To copy a single trunk, select Single and go to ● Single Trunk Procedure. F1

To copy a block of trunks, select Block and go to ◆ Block of Trunks Procedure. F2

● Single Trunk Procedure

Console/Display Instructions **Additional Information** **PC**

▶ **1. Enter the trunk number to copy from.**

```
Copy Trunk Info From:
Enter trunk number

Backspace
Exit            Enter
```

Dial or type:
Trunk number [*nnn*]
Slot and port number ∗[*sspp*]
Logical ID number #[*nnn*]

▶ **2. Save your entry.**

Select Enter. F10

If you get the Station Busy message, wait for an idle condition or exit system programming and try again later.

Console/Display Instructions **Additional Information** **PC**

▶ **3. Enter the trunk number to copy to.**

```
COPY Trunk xxx To:
Enter trunk number



Backspace        Next
Exit             Enter
```

xxx = “copy from” trunk entered in Step 1

Dial or type:
Trunk number [*nnn*]
Slot and port number ∗[*sspp*]
Logical ID number #[*nnn*]

▶ **4. Continue to copy options from this trunk to another trunk, or go to Step 5.**

Select Next. F9

Return to Step 3.

▶ **5. Save your entry.**

Select Enter. F10

▶ **6. Return to the System Programming menu.**

Select Exit three times. F5 F5 F5

◆ **Block of Trunks Procedure**

Console/Display Instructions **Additional Information** **PC**

▶ **1. Enter the trunk number to copy from.**

```
Copy Trunk:
Enter copy from trunk
number



Backspace
Exit             Enter
```

Dial or type:
Trunk number [*nnn*]
Slot and port number ∗[*sspp*]
Logical ID number #[*nnn*]

▶ **2. Save your entry.**

Select Enter. F10

If you get the Station Busy message, wait for an idle condition or exit system programming and try again later.

Console/Display Instructions **Additional Information** **PC**

▶ 3. Enter the first trunk number to copy to.

```
COPY Trunk xxx To:
Enter starting trunk
number


Backspace
Exit            Enter
```

xxx = “copy from” trunk entered in Step 1

Dial or type:
Trunk number [*nnn*]
Slot and port number ∗[*sspp*]
Logical ID number #[*nnn*]

▶ 4. Save your entry.

Select Enter. F10

If you get the Station Busy message, wait for an idle condition or exit system programming and try again later.

▶ 5. Enter the last trunk number in the block to copy to.

```
START at Trunk xxx To:
Enter ending trunk
number


Backspace
Exit            Enter
```

xxx = “start copy to” trunk entered in Step 3

Dial or type:
Trunk number [*nnn*]
Slot and port number ∗[*sspp*]
Logical ID number #[*nnn*]

▶ 6. Save your entry.

Select Enter. F10

▶ 7. Return to the System Programming menu.

Select Exit three times. F5 F5 F5

Uniform Dial Plan Facilities

Release 6.0 and later systems, Hybrid/PBX mode only, provide support for Uniform Dial Plan (UDP) facilities, private network tandem lines/trunks originating at one or more other MERLIN LEGEND Communications Systems or DEFINITY Communications Systems. Use the procedures in this section to program the switch identifiers for private network trunks.

Switch Identifiers

Switch identifiers are 1- or 2-digit prefixes that appear in print reports and are used by the system for transmission level determination, route checking, and to identify calls. If your system uses private facilities, you *must* program switch identifiers. Switch identifiers indicate the switch connected to the far end of a private trunk.

The procedures in this topic allow you to add, change, and remove switch identifiers.

Trunks connected to your system from the CO do not require identifiers. They are, by default, correctly assigned a null identifier.

When a private networked trunk is deleted, it is assigned a null identifier, as are trunks newly added to the system.

You can add a switch identifier to a block of trunks, and you can remove a switch identifier from a block of trunks that use the same switch identifier.

The correct switch identifier for a trunk or block of trunks is determined by the type of switch to which the trunk is connected and whether or not that switch is a satellite switch located within 200 miles of the local system. Identifying those switches greater than 200 miles from the local system as satellite is important in assuring transmission quality across the private network. The identifiers are switch numbers that have the following meanings:

- Unassigned (null) = trunk connected to CO (central office)
- 1–20 = trunk connected to a non-satellite MERLIN LEGEND Communications System greater than 200 miles
- 21–40 = trunk connected to a satellite MERLIN LEGEND Communications System
- 41–50 = trunk connected to a non-satellite, non-LEGEND system (for example, a DEFINITY Communications System) greater than 200 miles
- 51–60 = trunk connected to a satellite, non-LEGEND system (for example, a DEFINITY Communications System)

NOTE:
The Enter Switch Number screens for the switch identifier procedures include a Help option that supplies the information above.

Wherever possible, the same switch identifiers should be used for the same switch across a private network. For example, LEGEND A is identified by switch identifier 22 in LEGEND B and LEGEND C systems in a private network. This helps avoid a situation where calls are directed in a loop through several systems. However, a trunk may connect to a switch that is a satellite for one networked system but not a satellite for another networked system. In this case, a system may have more than one switch identifier. For example, LEGEND D may be located within 200 miles of LEGEND E but be more than 200 miles from LEGEND F in the same private network. In this case, the switch identifier for LEGEND D (for example, 21) in LEGEND E is different from the identifier for LEGEND D (for example, 1) as specified in LEGEND F.

This topic includes procedures for adding a switch identifier to a single trunk or to a block of sequentially numbered trunks.

Summary: Switch Identifiers

Programmable by	System Manager
Mode	Hybrid/PBX
Idle Condition	Not required
Planning Form	Form 2c, System Numbering: Line/Trunk Jacks Form 3b, Incoming Trunks: DS1 Connectivity (100D Module)
Factory Setting	Null (no value)
Valid Entries	Null, 1–20, 21–40, 41–50, 51–60
Inspect	No
Copy Option	No

Console Procedure	To enter or remove an identifier for one trunk:
	`LinesTrunks`→**More**→`UDP`→`SwNum-Single`→
	Dial trunk no.→`Enter`→Dial switch no.→`Enter` or `Delete`→
	`Exit`→ `Exit`→`Exit`
	
	To enter or remove identifiers for a block of trunks:
	`LinesTrunks`→**More**→`UDP`→`SwNum-Block`→Dial starting trunk in block→`Enter`→Dial ending trunk in block→
	`Enter`→Dial switch no.→`Enter` or `Delete`→
	`Exit`→`Exit`→`Exit`

PC Procedure	To enter or remove an identifier for one trunk: [F4]→[PgUp]→[F10]→[F1]→Type trunk no.→[F10]→ Type switch no.→[F10] or [F8]→[F5]→ [F5]→[F5] To enter or remove identifiers for a block of trunks: [F4]→[PgUp]→[F10]→[F2]→Type starting trunk in block→ [F10]→Type ending trunk in block→[F10]→Type switch no.→ [F10] or [F8]→[F5]→[F5]→[F5]

Console Display/Instructions **Additional Information** **PC**

▶ 1. Select the Lines and Trunks menu.

```
System Programming:      >
Make a selection
System          Extensions
SysRenumber     Options
Operator        Tables
LinesTrunks     AuxEquip
Exit            NightSrvce
```

F4

▶ 2. Go to the second screen of the Lines and Trunks menu.

```
Lines and Trunks:        >
Make a selection
LS/GS/DSL       PRI
TIE Lines       Copy
TT/LS Disc      RemoteAccss
DID             Pools
Exit            Toll Type
```

Press **More**. PgUp

▶ 3. Select UDP.

```
Lines and Trunks:        >
Make a selection
HoldDiscnct     LS-ID Delay
PrncipalUsr     ClockSync
QCC Prior       BRI
QCC Oper        T1 Data NW
Exit            UDP
```

F10

▶ 4. Select Single or Block Identifiers. ● ◆

```
UDP (NonCO):
Select one
SwNum-Single
SwNum-Block


Exit
```

For a single trunk, go to
● Single Trunk Procedure.

For a block of trunks, go to
◆ Block Procedure.

● Single Trunk Procedure

Console/Display Instructions	Additional Information	PC
▶ 1. Specify a single trunk identifier.		
Select SwNum-Single.		F1
▶ 2. Enter the number of the line/trunk.		
UDP SwitchNum-Single: Enter trunk number Backspace Exit Enter	Dial or type [*nnnn*].	
▶ 3. Save your entry.		
Select Enter.		F10
▶ 4. Enter the switch identifier (*nn* = Null, 1–20, 21–40, 41–50, 51–60).		
SwNum-Single Trunk: xxxx Enter switch number Help Delete Backspace Next Exit Enter	*xxxx* = trunk number entered in Step 2. Dial or type [*nn*].	
▶ 5. Assign or remove a switch identifier.		
Select Enter or Delete (to return to Step 2) or Next (to return to Step 4).	You may continue to assign or remove switch identifiers from additional lines/trunks by repeating Steps 2 through 4.	F10 F8 F9
▶ 6. Return to the System Programming menu.		
Select Exit three times.		F5 F5 F5

◆ Block Procedure

Console/Display Instructions	Additional Information	PC
▶ 1. Specify identifiers for a block of trunks.		
Select SwNum-Block.		F2
▶ 2. Enter the starting trunk number in the range.		
UDP SwitchNum-Block: Enter starting trunk Backspace Exit Enter	Dial or type [*nnnn*].	
▶ 3. Save your entry.		
Select Enter.		F10
▶ 4. Enter the ending trunk number in the range.		
SwNum-Block Start:*xxxx* Enter ending trunk Backspace Exit Enter	*xxxx* = trunk number entered in Step 2 Dial or type [*nnnn*].	
▶ 5. Save your entry.		
Select Enter.		F10
▶ 6. Enter the switch identifier (*nn* = Null, 1–20, 21–40, 41–50, 51–60).		
SwNumBlk Range: *xxxx nnnn* Enter switch number Help Delete Backspace Exit Enter	*xxxx* = starting number entered in Step 2 *nnnn* = ending number entered in Step 4 Dial or type [*nn*].	

Console/Display Instructions	Additional Information	PC
▶ **7. Assign or remove the switch identifier.**		
Select `Enter` or		F10
`Delete`		F8
	You may continue to assign or remove switch identifiers from additional lines/trunks by repeating Steps 2 through 7.	
▶ **8. Return to the System Programming menu.**		
Select `Exit` three times.		F5 F5 F5

DS1 Facilities

Use the procedures in this section to program the following options for DS1 (digital signal level 1) facilities (T1 or PRI) connected to a 100D (DS1) module:

- Type of DS1 facility
  - T1
  - ISDN (Integrated Services Digital Network) Primary Rate Interface (PRI)
- Switched 56 Dial Plan Routing
- Frame Format
- Zero Code Suppression
- Signaling Mode
- Line Compensation
- Channel Service Unit

Type of DS1 Facility

Use this procedure to specify the type of facility (T1 or PRI) connected to a 100D (DS1) module. If T1 type is programmed, and the channels are used for emulation and/or AT&T Switched Network (ASN), you must specify the type of channel emulation.

NOTE:
In Release 6.0 and later systems, you may order a point-to-point T1 circuit in order to provide amplification but not switching for a PRI tandem trunk that carries calls over long distances. PRI tandem trunks are preferable to T1 tandem trunks. Consult your Lucent Technologies representative for advice.

If the type is T1 and the type of channel emulation is tie trunk, you must specify whether the lines/trunks are TIE-PBX, Toll, or Switched 56 Data service. The valid settings are as follows:

- **TIE-PBX.** Select when emulated tie trunks are used to connect to another communications system (such as PBX or Centrex). For releases prior to Release 6.0, the transmit/receive parameter is set to 0/4.
- **Toll.** Select when emulated tie trunks are used for ASN services (such as Megacom®, Megacom 800, or Software Defined Network). For releases prior to Release 6.0, the transmit/receive parameter is set to 0/6.

  NOTE:
  The parameters listed in the two above items are for releases prior to Release 6.0. In Release 6.0 and later systems, the transmit/receive gains are determined by the call constituents.

- **TIE - S56 Data.** Select when emulated tie trunks are used for Switched 56 Data Service. Switched 56 Data Service is available only in Release 4.0 and later. The transmit/receive parameter is set to 0/0.

If the type is T1 and S56 Data Network Service is selected (available only in Release 4.0 and later), you must specify the following parameters:

- **Direction.** Specifies whether the trunk operates in one- or two-way direction. For one-way trunks, Outgoing Only or Incoming Only must also be specified.
- **Trunk Seizure Type.** Trunk seizure type is programmed independently for incoming or outgoing directions. Select one of the following: Wink Start, Delay Start, or Automatic Start.
- **Answer Supervision Time.** The time in milliseconds the answer supervision signal must be present to be considered valid.
- **Disconnect Time.** The time in milliseconds the disconnect signal must be present to be considered valid.
- **Dial Mode.** Select either Rotary or Touch-Tone. Dial mode is set independently for incoming or outgoing directions (Inmode or Outmode).

  NOTE:
  Touch-Tone Receivers are required on the far-end switch when the setting is Touch-Tone.

Table 3–2 on page 3-109 shows the factory setting for each S56 Data Network Service option and the valid range for each threshold.

In Release 6.0 and later systems, T1 S56 service is not supported for tandeming applications. Use PRI instead.

If you select T1, channels can emulate ground- or loop-start trunks, tie trunks, or DID trunks in any combination. Note that unused channels must be specified as unequipped.

If either T1 or PRI is selected, channels can be used for ASN services. When T1 channels are used for ASN services, each channel must be programmed for tie trunk emulation.

If you select PRI, you must perform additional procedures. At a minimum, the Framing Mode and Zero Code Suppression procedures must be performed. See "PRI Facilities" on page 3–183 for more information.

Summary: Type of DS1 Facility

Programmable by	System Manager
Mode	All
Idle Condition	100D module idle
Planning Form	Form 2c, System Numbering: Line/Trunk Jacks Form 3b, Incoming Trunks: DS1 Connectivity (100D module)
Factory Setting	T1, see Table 3–2 on page 3-109 for options
Valid Entries	T1, PRI
Inspect	Yes
Copy Option	No
Console Procedure	To select PRI: LinesTrunks→LS/GS/DSL→Dial slot no.→Enter→ Type→PRI→Enter→Exit→Exit→Exit→ Exit To select T1: All Ground, All Loop, or All Unequip: LinesTrunks→LS/GS/DSL→Dial slot no.→ Enter→ Type→ T1→Enter→Select type of emulation→Enter→ Exit→Exit→Exit→Exit To select T1: Ground-Start, Loop-Start, All Tie, or Unequip: LinesTrunks→LS/GS/DSL→Dial slot no.→Enter→ Type→T1→Enter→Select type of emulation→Enter→ Dial channel no.→Enter→Exit→Exit→Exit→Exit To select T1: All DID: LinesTrunks→LS/GS/DSL→Dial slot no.→Enter→ Type→T1→Enter→**More**→All DID→Enter→Exit→ Exit→Exit→Exit To select T1: DID: LinesTrunks→LS/GS/DSL→Dial slot no.→Enter→ Type→T1→Enter→**More**→DID→Enter→Dial channel no.→Enter→Exit→Exit→Exit→Exit

To select T1- All Tie:
LinesTrunks→LS/GS/DSL→Dial slot no.→Enter→Type→ T1→Enter→All TIE→Enter→ TIE-PBX, Toll, or S56→Enter→Dial channel no.→ Enter→Exit→ Exit→Exit→Exit

To select T1- Tie:
LinesTrunks→LS/GS/DSL→Dial slot no.→Enter→Type→T1→Enter→TIE→Enter→ TIE-PBX, Toll, or S56→Enter→Dial channel no.→ Enter→ Exit→Exit→Exit→Exit

To select T1: All Switched 56 Data:
LinesTrunks→LS/GS/DSL→Dial slot no.→Enter→Type→T1→Enter→**More**→ ALL S56 Data→ Enter→Select Direction, Intype, Outtype, AnsSupv, Disconnect, Inmode, or Outmode→ Program options→ Enter→Exit→Exit→Exit→Exit

To select T1: Switched 56 Data:
LinesTrunks→LS/GS/DSL→Dial slot no.→Enter→ Type→ T1→Enter→**More**→S56 Data→Enter→ Dial channel no.→Enter→Select Direction, Intype, Outtype, AnsSupv, Disconnect, Inmode, or Outmode→ Program options→ Enter→Exit→Exit→Exit→Exit

PC Procedure

To select PRI:
[F4]→[F1]→Type slot no.→[F10]→[F1]→[F2]→[F10]→ [F5]→[F5]→[F5]→[F5]

To select T1: All Ground, All Loop, All Unequip:
[F4]→[F1]→Type slot no.→[F10]→[F1]→[F1]→[F10]→[PgUp]→ Select type of emulation →[F10]→[F5]→[F5]→[F5]→[F5]

To select T1: Ground-Start, Loop-Start, All Tie, or Unequip:
[F4]→[F10]→Type slot no.→[F10]→[F1]→[F1]→[F10]→Select type of emulation→[F10]→Type channel no.→[F10]→[F5]→ [F5]→[F5]→[F5]

To select T1: All DID:
[F4]→[F1]→Type slot no.→[F10]→[F1]→[F1]→[F10]→[PgUp]→ [F7]→[F10]→[F5]→[F5]→[F5]→[F5]

To select T1: DID:
[F4]→[F10]→Type slot no.→[F10]→[F1]→[F1]→[F10]→[PgUp]→ [F1]→[F10]→Type channel no.→[F10]→[F5]→[F5]→[F5]→[F5]

To select T1- All Tie:
[F4]→[F1]→Type slot no.→[F10]→[F1]→[F1]→[F10]→Select [F1], [F2], or [F3]→[F10]→[F5]→[F5]→[F5]→[F5]

To select T1- Tie:
[F4] → [F1] → Type slot no. → [F10] → [F1] → [F1] → [F10] → Select [F1], [F2], or [F3] → [F10] → Type channel no. → [F10] → [F5] → [F5] → [F5] → [F5]

To select T1: ALL Switched 56 Data:
[F4] → [F1] → Type slot no. → [F10] → [F1] → [F1] → [F10] → [PgUp] → [F7] → [F10] → Select [F1], [F2], [F3], [F4], [F5], [F6], or [F7] → Program options → [F10] → [F5] → [F5] → [F5] → [F5]

To select T1: Switched 56 Data:
[F4] → [F1] → Type slot no. → [F10] → [F1] → [F1] → [F10] → [PgUp] → [F2] → [F10] → Type channel no. → [F10] → Select [F1], [F2], [F3], [F4], [F5], [F6], or [F7] → Program options → [F10] → [F5] → [F5] → [F5] → [F5]

Table 3–2. Switched 56 Data Signaling Options

Option	Factory Setting	Range
Direction	Two-Way	Two-Way, Outgoing, Incoming
Intype	Wink-Route by Dial Plan	Wink-Route by Dial Plan, Delay-Route by Dial Plan Auto-Route by Line Appearance
Outtype	Wink	Wink, Delay, Auto
Answer Supervision	300 ms	200–4,800 ms (increments of 20 ms)
Disconnect	300 ms	200–4,800 ms (increments of 20 ms)
Inmode	Touch Tone	Touch Tone, Rotary
Outmode	Touch Tone	Touch Tone, Rotary

Procedure: Type of DS1 Facility

Console Display/Instructions **Additional Information** **PC**

1. Select the Lines and Trunks menu.

```
System Programming      >
Make a selection
System          Extensions
SysRenumber     Options
Operator        Tables
LinesTrunks     AuxEquip
Exit            NightSrvce
```

[F4]

Console/Display Instructions **Additional Information** **PC**

▶ 2. Select Loop-Start/Ground-Start/DS1.

```
Lines and Trunks:        >
Make a selection
LS/GS/DS1        PRI
TIE Lines        Copy
TT/LS Disc       RemoteAccss
DID              Pools
Exit             Toll Type
```

F1

▶ 3. Enter the slot number in the control unit that contains the 100D module (*nn* = 1 to 17).

```
Loop/Ground/DS1:
Enter slot number (1-17)



Backspace
Exit             Enter
```

Dial or type [*nn*].

▶ 4. Save your entry.

Select Enter.

F10

If you get the System Busy message, wait for an idle condition and try again, or exit system programming and try again later.

▶ 5. Select Type.

```
DS1 Slot xx:
Make a selection
Type             Line Comp
FrameFormat      ChannelUnit
Suppression
Signaling
Exit
```

xx = slot number entered in Step 3

F1

Console/Display Instructions	Additional Information	PC
▶ 6. Select a facility type.		
DS1 Slot *xx*: Select one T1 PRI Exit Enter	*xx* = slot number entered in Step 3	
	Select T1 or PRI.	F1 F2
▶ 7. Save your entry.		
Select Enter.		F10
	If you selected PRI, you have finished this procedure. Go to "Frame Format" on page 3–128.	
▶ 8. Select a trunk type.		
Port Type Slot xx: > Select One GroundStart All Ground Loop Start All Loop TIE All TIE Unequipped All Unequip Exit Enter	xx = slot number entered in Step 3 If the trunk type you want is not displayed, go to the second screen of the Port Type Slot menu.	
	Press **More** to view second screen.	PgUp
	Press the button or function key next to your selection.	
Port Type Slot xx: Select one DID All DID S56 Data All S56Data Exit Enter		
	Press the button or function key next to your selection.	

Console/Display Instructions	Additional Information	PC
▶ **9. Save your entry.**	▲ ✚ ◆ ●	
Select Enter.		F10
	If you selected All Ground, All Loop, All Unequipped, or All DID, you have finished this procedure. If you selected Ground Start, Loop Start, DID, or Unequipped trunks, continue with Step 10. If you selected TIE trunks, go to **▲ Tie Trunk Procedure.** If you selected All TIE trunks, go to **✚ All Tie Trunk Procedure.** If you selected S56 Data, go to **◆ S56 Data Procedure.** If you selected ALL S56 Data, go to **● All S56 Data Procedure.**	

▶ **10. Enter the channel number (*nn* = 1 to 24).**

```
**** slot xx:
Enter channel num (1 to 24)


                 Delete
Backspace        Next
Exit             Enter
```

**** = option name selected in Step 8
xx = slot entered in Step 3

Dial or type [*nn*]. ⏎

▶ **11. Assign or remove the channel.**

Select Enter or F10
Delete. F8

You may continue to assign or remove additional channels by repeating steps 10 and 11.

Console/Display Instructions **Additional Information** **PC**

▶ **12. Continue to assign the channel to another slot or go to Step 13.**

Select Next. F9

Return to Step 10. The next slot is displayed on Line 1.

▶ **13. Save your entry.**

Select Enter. F10

▶ **14. Return to the System Programming menu.**

Select Exit four times. F5 F5 F5 F5

▲ **Tie Trunk Procedure**

Console Display/Instructions **Additional Information** **PC**

▶ **1. Specify the emulated trunks as TIE-PBX, Toll or S56 Data.**

```
Tie Type slot xx:
Select one
TIE-PBX
Toll
S56 Data

Exit            Enter
```

xx = slot entered in Step 3

TIE-PBX: Transmit-receive loss set to 0/4.
Toll: Channels used for network services transmit receive loss set to 0/6.
S56 Data: Channels used for data.

Select TIE-PBX, F1
Toll, or F2
S56 Data. F3

▶ **2. Save your entry.**

Select Enter. F10

▶ **3. Enter the channel number (*nn* = 1 to 24).**

```
TIE Lines Slot xx:
Enter channel num (1-24)

                Delete
Backspace       Next
Exit            Enter
```

xx = slot number entered in Step 3

Dial or type [*nn*].

Console/Display Instructions	Additional Information	PC
▶ 4. Assign or remove the channel.		
Select Enter or		F10
Delete.		F8
	You may continue to assign or remove additional channels by repeating Steps 3 and 4.	
▶ 5. Continue to assign the channel to another slot or go to Step 6.		
Select Next.		F9
	Return to Step 11. The next slot is displayed on Line 1.	
▶ 6. Save your entry.		
Select Enter.		F10
▶ 7. Return to the System Programming menu.		
Select Exit four times.		F5 F5 F5 F5

✚ All Tie Trunk Procedure

Console/Display Instructions	Additional Information	PC
▶ 1. Specify the emulated trunks as TIE-PBX, Toll or S56 Data.		
All TIE Type Slot *xx*: Select one TIE-PBX Toll S56 Data Exit Enter	*xx* = slot entered in Step 3 TIE-PBX: Transmit-receive loss set to 0/4. Toll: Channels used for network services transmit receive loss set to 0/6. S56 Data: Channels used for data.	
	Select TIE-PBX,	F1
	Toll	F2
	S56 Data	F3
▶ 2. Save your entry.		
Select Enter.		F10
▶ 3. Return to the System Programming menu.		
Select Exit four times.		F5 F5 F5 F5

◆ S56 Data Procedure

Console Display/Instructions	Additional Information	PC
▶ 1. Enter the channel number (*nn* = 1 to 24).		
S56 Data Lines Slot *xx*: Enter channel num (1-24) Delete Backspace Exit Enter	*xx* = slot number entered in Step 3. Dial or type [*nn*].	
▶ 2. Assign or remove the channel.		
Select Enter or		F10
Delete.		F8

If you select Enter, continue with Step 3. If you select Delete, return to Step 1.

▶ 3. Select an option.	▲ ✚ ✪ ✶ ⊙	
S56 Data Signaling: Make a selection Direction Disconnect Intype Inmode Outtype Outmode AnsSupvr Exit	If you select Direction, go to ▲ Direction procedure.	F1
	If you select Intype or Outtype, go to ✚ Trunk Seizure Type procedure.	F2 F3
	If you select AnsSupvr, go to ✪ Answer Supervision Timing Procedure.	F4
	If you select Disconnect, go to ✶ Disconnect Timing Procedure.	F5
	If you select Inmode or Outmode, go to ⊙ Dial Mode Procedure.	F6 F7

▲ Direction Procedure

Console/Display Instructions	Additional Information	PC
▶ 1. Select Direction.		
S56 Data: Ch *xx*: Enter channel direction Two Way Outgoing Incoming Next Exit Enter	*xx* = channel selected in Step 1.	
	Select Two Way,	F1
	Outgoing, or	F2
	Incoming.	F3
▶ 2. Continue to assign direction to the next channel or go to Step 3.		
Select Next.		F9
	Return to Step 1. The next channel is displayed on Line 1.	
▶ 3. Save your entry.		
Select Enter.		F10
▶ 4. Return to the System Programming menu.		
Select Exit four times.		F5 F5 F5 F5

✚ Trunk Seizure Type Procedure

Console/Display Instructions	Additional Information	PC

▶ 1. Select Trunk Seizure Type.

```
S56 Data:        Ch xx:
Select **type
Wink
Delay
Auto
                 Next
Exit             Enter
```

xx = channel selected in Step x.
** = In or Out

Select Wink, F1
Delay, or F2
Auto F3

If Intype was selected in Step 3 of the main procedure, the following screen options will appear:

Wink-Route by Dial Plan
Delay-Route by Dial Plan
Auto-Route by LineAprnce

▶ 2. Continue to assign Intype or Outtype to the next channel or go to Step 6.

Select Next. F9

Return to Step 1. The next channel is displayed on Line 1.

▶ 3. Save your entry.

Select Enter. F10

▶ 4. Return to the System Programming menu.

Select Exit four times. F5 F5 F5 F5

Answer Supervision Timing Procedure

Console Display/Instructions	Additional Information	PC

1. Erase the current answer supervision time (*nnnn*).

```
S56 Data        Ch xx:
Enter AnsSupervisionTime
(20-4800, increment 20)
nnnn

Backspace       Next
Exit            Enter
```

xx = number entered in Step 1

Press **Drop**. Alt + P

2. Enter the new answer supervision time (*nnnn* = 20 to 4,800 ms, in increments of 20 ms).

Dial or type [*nnnn*].

3. Continue to assign answer supervision time to another channel or go to Step 4.

Select Next. F9

Return to Step 1. The next channel is displayed on Line 1.

4. Save your entry.

Select Enter. F10

5. Return to the System Programming menu.

Select Exit four times. F5 F5 F5 F5

✶ Disconnect Timing Procedure

Console/Display Instructions	Additional Information	PC
▶ **1. Erase the current disconnect time (*nnnn*).**		
S56 Data Ch *xx*: Enter Disconnect time (140-4800) nnnn Backspace Next Exit Enter	*xx* = number entered in Step 1	
	Press **Drop.**	Alt + P
▶ **2. Enter the new disconnect time (*nnnn* = 140 to 4,800 ms, in increments of 20 ms).**		
Dial or type [*nnnn*].		⇐
▶ **3. Continue to assign disconnect time to another channel or go to Step 4.**		
Select Next.		F9
	Return to Step 1. The next channel is displayed on Line 1.	
▶ **4. Save your entry.**		
Select Enter.		F10
▶ **5. Return to the System Programming menu.**		
Select Exit four times.		F5 F5 F5 F5

⊙ Dial Mode Procedure

Console Display/Instructions	Additional Information	PC

▶ 1. Choose an option.

```
S56 Data:        Ch xx:
Select **mode
Rotary
Touch Tone

                 Next
Exit             Enter
```

xx = channel selected in Step x
** = In or Out

Select Rotary or F1
Touch Tone F2

▶ 2. Continue to assign Dial Mode type to the next channel or go to Step 3.

Select Next. F9

Return to Step 13. The next channel is displayed on Line 1.

▶ 3. Save your entry.

Select Enter. F10

▶ 4. Return to the System Programming menu.

Select Exit four times. F5 F5 F5 F5

● All S56 Data Procedure

Console/Display Instructions	Additional Information	PC

▶ 1. Select an option. ▲ ✚ ✪ ✶ ⊙

```
All S56 Data Signaling:
Make a selection
Direction        Disconnect
Intype           Inmode
Outtype          Outmode
AnsSupvr
Exit
```

If you select Direction, go to F1
▲ Direction Procedure.

If you select Intype or Outtype, go to F2
✚ Trunk Seizure Type procedure. F3

If you select AnsSupvr, go to F4
✪ Answer Supervision Timing Procedure.

If you select Disconnect, go to F5
✶ Disconnect Timing Procedure.

If you select Inmode or Outmode, go to F6
⊙ Dial Mode Procedure. F7

▲ Direction Procedure

Console/Display Instructions	Additional Information	PC

▶ 1. Select Direction.

```
All S56 Data:
Enter channel direction
Two Way
Outgoing
Incoming
                Next
Exit            Enter
```

Select Two Way, F1
Outgoing, or F2
Incoming. F3

▶ 2. Save your entry.

Select Enter. F10

▶ 3. Return to the System Programming menu.

Select Exit four times. F5 F5 F5 F5

✚ Trunk Seizure Type Procedure

Console Display/Instructions	Additional Information	PC

▶ 1. Select Trunk Seizure Type.

```
All S56 Data:
Select **type
Wink
Delay
Auto
                Next
Exit            Enter
```

** = In or Out

Select Wink, F1
Delay, or F2
Auto. F3

If Intype was selected in Step 3 of the main procedure, the following screen options will appear:

Wink-Route by Dial Plan
Delay-Route by Dial Plan
Auto-Route by LineAprnce

▶ 2. Save your entry.

Select Enter. F10

▶ 3. Return to the System Programming menu.

Select Exit four times. F5 F5 F5 F5

✪ Answer Supervision Timing Procedure

Console/Display Instructions	Additional Information	PC

▶ 1. Erase the current answer supervision time (*nnnn*).

```
All SS6 Data
Enter AnsSupervisionTime
(20-4800, increment 20)
nnnn

Backspace        Next
Exit             Enter
```

Press **Drop.** Alt + P

▶ 2. Enter the new answer supervision time (*nnnn* = 20 to 4,800 ms, in increments of 20 ms).

Dial or type [*nnnn*]. ⏎

▶ 3. Save your entry.

Select Enter. F10

▶ 4. Return to the System Programming menu.

Select Exit four times. F5 F5 F5 F5

✶ Disconnect Timing Procedure

Console Display/Instructions	Additional Information	PC

▶ 1. Erase the current disconnect time (*nnnn*).

```
All SS6 Data
Enter Disconnect time
(140-4800)
nnnn

Backspace        Next
Exit             Enter
```

Press **Drop.** Alt + P

▶ 2. Enter the new disconnect time (*nnnn* = 140 to 4,800 ms, in increments of 20 ms).

Dial or type [*nnnn*]. ⏎

Console/Display Instructions	Additional Information	PC
▶ **3. Save your entry.**		
Select Enter.		F10
▶ **4. Return to the System Programming menu.**		
Select Exit four times.		F5 F5 F5 F5

⊙ Dial Mode Procedure

Console/Display Instructions	Additional Information	PC
▶ **1. Choose an option.**		
All SSG Data: Select **mode Rotary Touch Tone Next Exit Enter	** = In or Out Select Rotary or Touch Tone.	 F1 F2
▶ **2. Save your entry.**		
Select Enter.		F10
▶ **3. Return to the System Programming menu.**		
Select Exit four times.		F5 F5 F5 F5

Switched 56 Dial Plan Routing

Dial plan routing provides a way to route incoming calls received on a Switched 56 Network line. An incoming call is routed by matching the incoming number and then optionally deleting and/or adding digits to direct the call to a specific endpoint. The expected digits are the number of incoming digits outpulsed from the central office.

Summary: Switched 56 Dial Plan Routing

Programmable by	System Manager
Mode	Hybrid/PBX
Idle Condition	100D module idle
Planning Form	Form 3b, Incoming Trunks: DS1 Connectivity (100D module)
Factory Setting	D4 compatible
Valid Entries	D4, ESF
Inspect	No
Copy Option	No

Console Procedure	To specify Expected Digits:
	`LinesTrunks`→**More**→`T1 Data NW`→`S56 Dial Plan Routing`→`Expected Digits`→**Drop**→Dial expected digits→`Enter`→`Exit`→`Exit`→`Exit`
	
	To specify Delete Digits:
	`LinesTrunks`→**More**→`T1 Data NW`→`S56 Dial Plan Routing`→`Delete Digits`→**Drop**→Dial delete digits→`Enter`→`Exit`→`Exit`→`Exit`
	
	To specify Add Digits:
	`LinesTrunks`→**More**→`T1 Data NW`→`S56 Dial Plan Routing`→`Add Digits`→**Drop**→Dial add digits→`Enter`→`Exit`→`Exit`→`Exit`

PC Procedure	To specify Expected Digits: [F4]→[PgUp]→[F9]→[F1]→[F1]→[Alt] + [P]→Type expected digits→[F10]→[F5]→[F5]→[F5] To specify Delete Digits: [F4]→[PgUp]→[F9]→[F1]→[F2]→[Alt] + [P]→Type delete digits→[F10]→[F5]→[F5]→[F5] To specify Add Digits: [F4]→[PgUp]→[F9]→[F1]→[F3]→[Alt] + [P]→Type add digits→[F10]→[F5]→[F5]→[F5]

Switched 56 Data Dial Plan Routing

Console Display/Instructions	Additional Information	PC
▶ **1. Select the Lines and Trunks menu.**		
System Programming: > Make a selection System Extensions SysRenumber Options Operator Tables LinesTrunks AuxEquip Exit NightSrvce		F4
▶ **2. Go to the second screen of the Lines and Trunks menu.**		
Lines and Trunks: > Make a selection LS/GS/DSL PRI TIE Lines Copy TT/LS Disc RemoteAccss DID Pools Exit Toll Type	Press **More**.	PgUp
▶ **3. Select T1 Data NW.**		
Lines and Trunks: > Make a selection HoldDiscnct LS-ID Delay PrncipalUsr ClockSync QCC Prior BRI QCC Oper T1 Data NW Exit UDP		F9
▶ **4. Select Switched 56 Dial Plan Routing.**		
T1 Data Network: > Make a selection S56 Dial Plan Routing Exit		F1

Console/Display Instructions	Additional Information	PC
▶ **5. Select an option.**	▲ ✚ ✪	
S56 Data Dial Plan Rtng: Expected Digits Add Digits Delete Digits Exit Disconnect	If you select Expected Digits, go to ▲ Expected Digits Procedure.	F1
	If you select Add Digits, go to ✚ Add Digits procedure.	F2
	If you select Delete Digits, go to ✪ Delete Digits Procedure.	F3

▲ Expected Digits Procedure

Console Display/Instructions	Additional Information	PC
▶ **1. Erase the current number of expected digits (*n*).**		
S56 Data Expected Digits: Enter number of expected digits (1-4) *n* Backspace Exit Enter	Press **Drop**.	Alt+P
▶ **2. Enter the new number of expected digits (*n* = 1 to 4).**		
Dial or type [*n*].		⊂
▶ **3. Save your entry.**		
Select Enter.		F10
▶ **4. Return to the System Programming menu.**		
Select Exit four times.		F5 F5 F5 F5

✚ Add Digits Procedure

Console Display/Instructions	Additional Information	PC

▶ 1. Erase the current digits added to a call (*nnnn* = 0 to 9999).

```
S56 Data Add Digits:
Enter digits to add

nnnn

Backspace
Exit            Enter
```

Press **Drop.** Alt+P

▶ 2. Enter the new specific digits to add to a call (*n* = 0 to 9999).

Dial or type [*n*]. ⊖

▶ 3. Save your entry.

Select Enter. F10

▶ 4. Return to the System Programming menu.

Select Exit four times. F5 F5 F5 F5

✪ Delete Digits Procedure

Console Display/Instructions	Additional Information	PC

▶ 1. Erase the current number of digits to delete (*n*).

```
S56 Data Delete Digits:
Enter number of digits
to delete (0-4)
n

Backspace
Exit            Enter
```

Press **Drop**. Alt+P

▶ 2. Enter the new number of digits to delete (*n* = 0 to 4).

Dial or type [*n*]. ⊖

▶ 3. Save your entry.

Select Enter. F10

▶ 4. Return to the System Programming menu.

Select Exit four times. F5 F5 F5 F5

Frame Format

Use this procedure to specify the framing format for the 100D module as D4-compatible or Extended Superframe. Your selection must match the framing mode at the far end of the DS1 facility.

NOTE:
In Release 6.0 and later systems, use the Extended Superframe format for tandem PRI trunks.

Summary: Frame Format

Programmable by	System Manager
Mode	All
Idle Condition	100D module idle
Planning Form	Form 3b, Incoming Trunks: DS1 Connectivity (100D module)
Factory Setting	D4-compatible
Valid Entries	D4, ESF
Inspect	No
Copy Option	No
Console Procedure	LinesTrunks→LS/GS/DSL→Dial slot no.→ Enter→ FrameFormat→Select format type→ Enter→Exit→Exit
PC Procedure	F4 →F1 →Type slot no.→F10 →F2 →Select format type→F10 →F5 →F5

Procedure: Frame Format

Console Display/Instructions	Additional Information	PC
1. Select the Lines and Trunks menu.		
System Programming: > Make a selection System Extensions SysRenumber Options Operator Tables LinesTrunks AuxEquip Exit NightSrvce		F4

Console Display/Instructions **Additional Information** **PC**

▶ 2. Select Loop-Start/Ground-Start/DS1.

```
Lines and Trunks:        >
Make a selection
LS/GS/DS1        PRI
TIE Lines        Copy
TT/LS Disc       RemoteAccss
DID              Pools
Exit             Toll Type
```

F1

▶ 3. Enter the slot number in the control unit that contains the 100D module (*nn* = 1 to 17).

```
Loop/Ground/DS1:
Enter slot number (1-17)



Backspace
Exit             Enter
```

Dial or type [*nn*].

▶ 4. Save your entry.

Select Enter. F10

▶ 5. Select Frame Format.

```
DS1 Slot xx:
Make a selection
Type             Line Comp
FrameFormat      ChannelUnit
Suppression
Signaling
Exit
```

xx = slot number entered in Step 3

F2

▶ 6. Select a format type.

```
DS1 Slot xx:
Select one
D4 Compatible
Extended Super Frame
```

xx = slot number entered in Step 3

Select D4 Compatible or F1
Extended Super Frame. F2

Console/Display Instructions	Additional Information	PC
▶ **7. Save your entry.**		
Select Enter.		F10
▶ **8. Return to the System Programming menu.**		
Select Exit twice.		F5 F5
	If you are using PRI Facilities, go to "Zero Code Suppression."	

Zero Code Suppression

Use this procedure to specify zero code suppression for the 100D module as AMI zero code suppression (AMI-ZCS) or bipolar eight zero suppression (B8ZS). Your selection must match the suppression at the far end of the DS1 facility.

NOTE:
In Release 6.0 and later systems, use bipolar eight zero suppression (B8ZS) for tandem PRI trunks.

Summary: Zero Code Suppression

Programmable by	System Manager
Mode	All
Idle Condition	100D module idle
Planning Form	Form 3b, Incoming Trunks: DS1 Connectivity (100D module)
Factory Setting	AMI-ZCS
Valid Entries	AMI-ZCS, B8ZS
Inspect	No
Copy Option	No
Console Procedure	LinesTrunks→LS/GS/DS1→Dial slot no.→ Enter→ Suppression→AMI-ZCS or B8ZS→ Enter→Exit→Exit
PC Procedure	F4 → F1 →Type slot no.→F10 → F3 → F1 or F2 → F10 → F5 → F5

Procedure: Zero Code Suppression

Console Display/Instructions **Additional Information** **PC**

1. Select the Lines and Trunks menu.

```
System Programming:      >
Make a selection
System          Extensions
SysRenumber     Options
Operator        Tables
LinesTrunks     AuxEquip
Exit            NightSrvce
```

F4

2. Select Loop-Start/Ground-Start/DS1.

```
Lines and Trunks:        >
Make a selection
LS/GS/DS1       PRI
TIE Lines       Copy
TT/LS Disc      RemoteAccss
DID             Pools
Exit            Toll Type
```

F1

3. Enter the slot number in the control unit that contains the 100D module (*nn* = 1 to 17).

```
Loop/Ground/DS1:
Enter slot number (1-17)



Backspace
Exit            Enter
```

Dial or type [*nn*].

4. Save your entry.

Select Enter.

F10

Console/Display Instructions	Additional Information	PC

▶ 5. Select Suppression.

```
DS1 Slot xx:
Make a selection
Type            Line Comp
FrameFormat     ChannelUnit
Suppression
Signaling
Exit
```

xx = slot number entered in Step 3

F3

▶ 6. Select AMI zero code suppression or bipolar 8 zero substitution.

```
DS1 Slot xx:
Select one
AMI-ZCS
B8ZS


Exit            Enter
```

xx = slot number entered in Step 3

Select AMI-ZCS or B8ZS. F1 F2

▶ 7. Save your entry.

Select Enter. F10

▶ 8. Return to the System Programming menu.

Select Exit twice. F5 F5

Signaling Mode

Use this procedure to specify the signaling for the 100D module as robbed-bit or common-channel signaling.

NOTE:
This procedure is needed only for T1 facilities; common-channel signaling is set automatically for PRI facilities.

Summary: Signaling Mode

Programmable by	System Manager
Mode	All
Idle Condition	100D module idle
Planning Form	Form 3b, Incoming Trunks: DS1 Connectivity (100D module)
Factory Setting	Robbed bit
Valid Entries	Robbed Bit, Common Channel

Inspect	No
Copy Option	No
Console Procedure	LinesTrunks→LS/GS/DS1→Dial slot no.→Enter→ Signaling→Select type of signaling→Enter→Exit→Exit
PC Procedure	F4 →F1 →Type slot no.→F10 →F4 →Select type of signaling→F10 →F5 →F5

Procedure: Signaling Mode

Console Display/Instructions **Additional Information** **PC**

1. Select the Lines and Trunks menu.

```
System Programming:      >
Make a selection
System          Extensions
SysRenumber     Options
Operator        Tables
LinesTrunks     AuxEquip
Exit            NightSrvce
```

F4

2. Select Loop-Start/Ground-Start/DS1.

```
Lines and Trunks:        >
Make a selection
LS/GS/DS1       PRI
TIE Lines       Copy
TT/LS Disc      RemoteAccss
DID             Pools
Exit            Toll Type
```

F1

3. Enter the slot number in the control unit that contains the 100D module (*nn* = 1 to 17).

```
Loop/Ground/DS1:
Enter slot number (1-17)



Backspace
Exit            Enter
```

Dial or type [*nn*].

Console/Display Instructions	Additional Information	PC
▶ 4. Save your entry.		
Select Enter.		F10
▶ 5. Select Signaling.		
DS1 Slot *xx*: Make a selection Type Line Comp FrameFormat ChannelUnit Suppression Signaling Exit	*xx* = slot number entered in Step 3	F4
▶ 6. Select the type of signaling.		
Signaling DS1 Slot *xx*: Select one Robbed Bit Common Channel Exit Enter	*xx* = slot number entered in Step 3 Common Channel is used for tandem PRI trunks.	
	Select Robbed Bit or	F1
	Common Channel.	F2
▶ 7. Save your entry.		
Select Enter.		F10
▶ 8. Return to the System Programming menu.		
Select Exit twice.		F5 F5

Line Compensation

Use this procedure to specify the amount of cable loss in decibels. Cable loss is based on the length of cable between the 100D module and the Channel Service Unit, as shown below:

- 1 = 0.6 dB loss
- 2 = 1.2 dB loss
- 3 = 1.8 dB loss
- 4 = 2.4 dB loss
- 5 = 3.0 dB loss

Summary: Line Compensation

Programmable by	System Manager
Mode	All
Idle Condition	100D module idle
Planning Form	Form 3b, Incoming Trunks: DS1 Connectivity (100D module)
Factory Setting	1 (0.6 dB loss)
Valid Entries	1 to 5
Inspect	No
Copy Option	No
Console Procedure	LinesTrunks→LS/GS/DS1→Dial slot no.→Enter→ Line Comp→**Drop**→Dial line compensation value→ Enter→ Exit→Exit
PC Procedure	F4 → F1 →Type slot no.→F10 → F6 → Alt + P → Type line compensation value→F10 → F5 → F5

Procedure: Line Compensation

Console Display/Instructions **Additional Information** **PC**

▶ 1. Select the Lines and Trunks menu.

```
System Programming:      >
Make a selection
System          Extensions
SysRenumber     Options
Operator        Tables
LinesTrunks     AuxEquip
Exit            NightSrvce
```

F4

▶ 2. Select Loop-Start/Ground-Start/DS1.

```
Lines and Trunks:        >
Make a selection
LS/GS/DS1       PRI
TIE Lines       Copy
TT/LS Disc      RemoteAccss
DID             Pools
Exit            Toll Type
```

F1

Console/Display Instructions **Additional Information** **PC**

▶ **3. Enter the slot number in the control unit that contains the 100D module (*nn* = 1 to 17).**

```
Loop/Ground/DS1:
Enter slot number (1-17)



Backspace
Exit            Enter
```

Dial or type [*nn*].

▶ **4. Save your entry.**

Select Enter. F10

▶ **5. Select Line Compensation.**

```
DS1 Slot xx:
Make a selection
Type            Line Comp
FrameFormat     ChannelUnit
Suppression
Signaling
Exit
```

xx = slot number entered in Step 3

F6

▶ **6. Erase the current line compensation value (*n*).**

```
Line Comp DS1 Slot xx:
Enter line compensation
value (1-5)
n

Backspace
Exit            Enter
```

xx = slot number entered in Step 3

Press **Drop**. Alt+P

▶ **7. Enter a value for the line compensation (*n* = 1 to 5).**

Dial or type [*n*].

▶ **8. Save your entry.**

Select Enter. F10

▶ **9. Return to the System Programming menu.**

Select Exit twice. F5 F5

Channel Service Unit

Use this procedure to specify the type of equipment provided by the local telephone company as foreign exchange or special access.

NOTE:
You do not need to use this procedure unless your system emulates loop-start or ground-start with the T1 type of DS1 facility.

Summary: Channel Service Unit

Programmable by	System Manager
Mode	All
Idle Condition	100D module idle
Planning Form	Form 3b, Incoming Trunks: DS1 Connectivity (100D module)
Factory Setting	Foreign Exchange
Valid Entries	Foreign Exchange, Special Access
Inspect	No
Copy Option	No
Console Procedure	LinesTrunks→LS/GS/DS1→Dial slot no.→Enter→ ChannelUnit→Foreign Exchange or Special Access→ Enter→Exit→Exit
PC Procedure	[F4]→[F1]→Type slot no.→[F10]→[F7]→[F1] or [F2]→ [F10]→[F5]→[F5]

Procedure: Channel Service Unit

Console Display/Instructions	Additional Information	PC
1. Select the Lines and Trunks menu.		
System Programming: > Make a selection System Extensions SysRenumber Options Operator Tables LinesTrunks AuxEquip Exit NightSrvce		[F4]

Console/Display Instructions **Additional Information** **PC**

▶ 2. Select Loop-Start/Ground-Start/DS1.

```
Lines and Trunks:        >
Make a selection
LS/GS/DS1        PRI
TIE Lines        Copy
TT/LS Disc       RemoteAccss
DID              Pools
Exit             Toll Type
```

F1

▶ 3. Enter the slot number in the control unit that contains the 100D module (*nn* = 1 to 17).

```
Loop/Ground/DS1:
Enter slot number (1-17)



Backspace
Exit             Enter
```

Dial or type [*nn*].

▶ 4. Save your entry.

Select Enter. F10

▶ 5. Select Channel Unit.

```
DS1 Slot xx:
Make a selection
Type             Line Comp
FrameFormat      ChannelUnit
Suppression
Signaling
Exit
```

xx = slot number entered in Step 3

F7

▶ 6. Select the type of channel unit.

```
ChannelUnit DS1 Slot xx:
Select one
Foreign Exchange
Special Access



Exit             Enter
```

xx = slot number entered in Step 3

Select Foreign Exchange or Special Access. F1 F2

Console/Display Instructions	Additional Information	PC
▶ **7. Save your entry.**		
Select Enter.		F10
▶ **8. Return to the System Programming menu.**		
Select Exit twice.		F5 F5

Tie Trunks

This section covers programming procedures for the following tie trunk options:

- Direction
- Tie Trunk Seizure Type
- E&M Signal
- Dial Mode
- Tie Trunk Dial Tone
- Tie Trunk Answer Supervision Time
- Disconnect Time

Direction

Use this procedure to specify whether tie trunks operate in a one- or two-way direction. For one-way tie trunks, you must also specify whether the direction is out or in.

Summary: Direction

Programmable by	System Manager
Mode	All
Idle Condition	Tie trunk idle
Planning Form	Form 3c, Incoming Trunks: Tie
Factory Setting	Two-way
Valid Entries	Two-way, Outgoing, Incoming
Inspect	No
Copy Option	Yes
Console Procedure	LinesTrunks→TIE Lines→Direction→Dial trunk no.→ Enter→Specify direction→Enter→Exit→Exit
PC Procedure	F4 → F2 → F1 → Type trunk no. → F10 → Specify direction → F10 → F5 → F5

Procedure: Direction

Console Display/Instructions	Additional Information	PC

1. Select the Lines and Trunks menu.

```
System Programming:      >
Make a selection
System          Extensions
SysRenumber     Options
Operator        Tables
LinesTrunks     AuxEquip
Exit            NightSrvce
```

F4

2. Select TIE Lines.

```
Lines and Trunks:        >
Make a selection
LS/GS/DSL       PRI
TIE Lines       Copy
TT/LS Disc      RemoteAccss
DID             Pools
Exit            Toll Type
```

F2

3. Select Direction.

```
TIE Trunks:
Make a selection
Direction       Inmode
Intype          Outmode
Outtype         Dialtone
E&M Signal      AnsSupvr
Exit            Disconnect
```

F1

Console/Display Instructions **Additional Information** **PC**

▶ 4. Enter the tie trunk number.

```
Direction:
Enter trunk for assignmt



Backspace
Exit            Enter
```

Dial or type:
Trunk number [*nnn*]
Slot and port number ∗[*sspp*]
Logical ID number #[*nnn*]

▶ 5. Save your entry.

Select Enter. F10

If you get the Trunk Busy message, wait for an idle condition or exit system programming and try again later.

▶ 6. Specify the trunk direction.

```
Trunk xxxx:
Select trunk direction
Two Way
OutGoing
InComing
                Next
Exit            Enter
```

xxxx = trunk entered in Step 4
Two Way is used for tandem tie trunks in R6.0 or later systems.

Select Two Way, F1
OutGoing, or F2
InComing. F3

▶ 7. Continue to assign the direction to another trunk, or go to Step 8.

Select Next. F9

Return to Step 6. The next trunk is displayed on Line 1.

▶ 8. Save your entry.

Select Enter. F10

▶ 9. Return to the System Programming menu.

Select Exit twice. F5 F5

Tie Trunk Seizure Type

Use this procedure to specify whether the seizure type of incoming or outgoing tie trunk is wink, delay, immediate, or automatic.

NOTE:
In Release 6.0 and later systems, delay-start tie trunks should be used for tandeming.

The following settings are recommended when T1 facilities are programmed for tie-trunk emulation to provide special network services [such as Megacom, Megacom 800, or Software Defined Network (SDN)]:

- If Automatic Route Selection (ARS) is used for all outgoing calls and no personal line or **Pool** buttons are used, assign the wink signaling type. Set the network to wink.
- If personal line or **Pool** buttons (pool or dial-out codes) are used for outgoing calls, assign the immediate signaling type. Set the network to dial. Contact your service provider for more information about the dial setting.
- If Dialed Number Identification Service (DNIS) is used for incoming calls, assign the wink signaling type. The network is also set to wink. (Setting both ends to immediate also works.) Contact your service provider for more information about the appropriate setting.
- When DNIS is not used for incoming calls, assign the automatic signaling type. The network is set to automatic.

Summary: Tie Trunk Seizure Type

Programmable by	System Manager
Mode	All
Idle Condition	Tie trunk idle
Planning Form	Form 3c, Incoming Trunks: Tie
Factory Setting	Wink
Valid Entries	Wink, Delay, Immediate, Automatic
Inspect	No
Copy Option	Yes
Console Procedure	`LinesTrunks`→`TIE Lines`→`Intype` or `Outtype`→Dial trunk no.→`Enter`→Specify seizure type→`Enter`→`Exit`→`Exit`
PC Procedure	[F4]→[F2]→[F2] or [F3]→Type trunk no.→[F10]→Specify seizure type→[F10]→[F5]→[F5]

Procedure: Tie Trunk Seizure Type

Console Display/Instructions	Additional Information	PC

1. Select the Lines and Trunks menu.

```
System Programming:      >
Make a selection
System          Extensions
SysRenumber     Options
Operator        Tables
LinesTrunks     AuxEquip
Exit            NightSrvce
```

F4

2. Select Tie Lines.

```
Lines and Trunks:        >
Make a selection
LS/GS/DSL       PRI
TIE Lines       Copy
TT/LS Disc      RemoteAccss
DID             Pools
Exit            Toll Type
```

F2

3. Select Intype (incoming) or Outtype (outgoing).

```
TIE Trunks:
Make a selection
Direction       Inmode
Intype          Outmode
Outtype         Dialtone
E&M Signal      AnsSupvr
Exit            Disconnect
```

Select Intype or Outtype. F2 F3

4. Enter the tie trunk number.

```
**** Trunk Type:
Enter trunk for assignmt



Backspace
Exit            Enter
```

**** = option name selected in Step 3

Dial or type:
Trunk number [*nnn*]
Slot and port number *[*sspp*]
Logical ID number #[*nnn*]

Console/Display Instructions	Additional Information	PC
▶ **5. Save your entry.**		
Select Enter.		F10
▶ **6. Specify the tie trunk seizure type.**		
Trunk *xxxx*: Select **** Trk type Wink Delay Immmed Auto Next Exit Enter	*xxxx* = trunk entered in Step 4 **** = option name selected in Step 3 Delay is used for private tie trunks in R6.0 or later systems.	
	Select Wink,	F1
	Delay,	F2
	Immed, or	F3
	Auto.	F4
▶ **7. Continue to assign a seizure type to another trunk, or go to Step 8.**		
Select Next.		F9
	Return to Step 6. The next trunk is displayed on Line 1.	
▶ **8. Save your entry.**		
Select Enter.		F10
▶ **9. Return to the System Programming Menu.**		
Select Exit twice.		F5 F5

E&M Signal

Use this procedure to specify the type of tie trunk signal, as follows:

- E&M Mode:
  - **1S, Type 1 Standard.** Tie trunks that are connected through the local telephone company.
  - **1C, Type 1 Compatible.** Tie trunks that are connected directly to a system that uses 1S signaling.
- Simplex Mode:
  - **5, Type 5 Simplex.** Tie trunks that are connected to a system using Type 5 signaling.

NOTE:
In Release 6.0 and later systems, E&M trunks that are used for private networking should be programmed at each end with a switch identifier that indicates the remote system where the trunk is connected. See "Uniform Dial Plan Facilities" on page 3–100 for details.

Summary: E&M Signal

Programmable by	System Manager
Mode	All
Idle Condition	Tie trunk idle
Planning Form	Form 3c, Incoming Trunks: Tie
Factory Setting	1S
Valid Entries	1S, 1C, 5
Inspect	No
Copy Option	Yes
Console Procedure	`LinesTrunks`→`TIE Lines`→`E&M Signal`→Dial trunk no.→`Enter`→Specify signaling type→`Enter`→`Exit`→`Exit`
PC Procedure	[F4]→[F2]→[F4]→Type trunk no.→[F10]→Specify signaling type→[F10]→[F5]→[F5]

Procedure: E&M Signal

Console Display/Instructions	Additional Information	PC

▶ 1. Select the Lines and Trunks menu.

```
System Programming:      >
Make a selection
System          Extensions
SysRenumber     Options
Operator        Tables
LinesTrunks     AuxEquip
Exit            NightSrvce
```

F4

▶ 2. Select Tie Lines.

```
Lines and Trunks:        >
Make a selection
LS/GS/DSL       PRI
TIE Lines       Copy
TT/LS Disc      RemoteAccss
DID             Pools
Exit            Toll Type
```

F2

▶ 3. Select E&M Signal.

```
TIE Trunks:
Make a selection
Direction       Inmode
Intype          Outmode
Outtype         Dialtone
E&M Signal      AnsSupvr
Exit            Disconnect
```

F4

▶ 4. Enter a tie trunk number.

```
E&M Signal:
Enter trunk for assignmt



Backspace
Exit            Enter
```

Dial or type:
Trunk number [*nnn*]
Slot and port number ∗[*sspp*]
Logical ID number #[*nnn*]

Console/Display Instructions	Additional Information	PC
▶ **5. Save your entry.**		
Select Enter.		F10
▶ **6. Specify the type of signaling for the trunk.**		
Trunk *xxx*: Select E&M Trk Signaling Type1S Type1C Type5 Next Exit Enter	*xxx* = trunk entered in Step 4	
	Select Type1S,	F1
	Type1C, or	F2
	Type5.	F3
▶ **7. Continue to assign E&M signaling to another trunk, or go to Step 8.**		
Select Next.		F9
	Return to Step 6. The next trunk is displayed on Line 1.	
▶ **8. Save your entry.**		
Select Enter.		F10
▶ **9. Return to the System Programming menu.**		
Select Exit twice.		F5 F5

Dial Mode

Use this procedure to specify whether an incoming or outgoing tie trunk is touch-tone or rotary.

Touch-tone cannot be programmed for incoming immediate signaling tie trunks. Users of touch-tone single-line telephones cannot make calls by using individual trunks programmed for rotary operation. The touch-tone signals generated from the telephone while the user is dialing are transmitted to the central office at the same time the rotary signals are sent to the system. The central office receives both signals and cannot process the call.

Summary: Dial Mode

Programmable by	System Manager
Mode	All
Idle Condition	Not required
Planning Form	Form 3c, Incoming Trunks: Tie
Factory Setting	Rotary
Valid Entries	Rotary, Touch-tone
Inspect	Yes
Copy Option	Yes
Console Procedure	To program a single line/trunk: LinesTrunks→TIE Lines→Inmode or Outmode→Entry Mode→Dial line/trunk no.→Enter or Delete→ Exit→Exit→Exit To program a block of lines/trunks: LinesTrunks→TIE Lines→Inmode or Outmode→Select block of lines→Toggle LED On/Off→Exit→Exit→Exit
PC Procedure	To program a single line/trunk: [F4]→[F2]→[F6] or [F7]→[F6]→Type line/trunk no.→ [F10] or [F8]→[F5]→[F5]→[F5] To program a block of lines/trunks: [F4]→[F2]→[F6] or [F7]→Select block of lines→ Toggle letter G On/Off→[F5]→[F5]→[F5]

Procedure: Dial Mode

Console Display/Instructions	Additional Information	PC
▶ 1. Select the Lines and Trunks menu.		
System Programming: > Make a selection System Extensions SysRenumber Options Operator Tables LinesTrunks AuxEquip Exit NightSrvce		[F4]

Console Display/Instructions **Additional Information** **PC**

▶ 2. Select Tie Lines.

```
Lines and Trunks:        >
Make a selection
LS/GS/DSL        PRI
TIE Lines        Copy
TT/LS Disc       RemoteAccss
DID              Pools
Exit             Toll Type
```

F2

▶ 3. Select Inmode signaling or Outmode signaling.

```
TIE Trunks:
Make a selection
Direction        Inmode
Intype           Outmode
Outtype          Dialtone
E&M Signal       AnsSupvr
Exit             Disconnect
```

Select Inmode or Outmode. F6 F7

▶ 4. Specify the line(s). ● ◆

```
**** Trunk Dial:
Enter trunk w/TouchTone
Lines 01-20      Entry Mode
Lines 21-40
Lines 41-60
Lines 61-80
Exit
```

**** = option name selected in Step 3

For a single line, go to
● Single Line Procedure.

For a block of lines, go to
◆ Block Procedure.

● Single Line Procedure

Console Display/Instructions	Additional Information	PC
▶ **1. Specify entry mode.**		
Select Entry Mode.		F6
▶ **2. Enter the number of the line/trunk.**		
**** Trunk dial: Enter Trunks w/TouchTone Delete Backspace Exit Enter	**** = option name selected in Step 3	
	Dial or type [*nnn*].	
▶ **3. Assign or remove touch-tone dial mode from the line/trunk.**		
Select Enter or		F10
Delete.		F8
	You may continue to assign or remove touch-tone dial mode from additional lines/trunks by repeating Steps 2 and 3.	
▶ **4. Return to the System Programming menu.**		
Select Exit three times.		F5 F5 F5

◆ **Block Procedure**

Console/Display Instructions	Additional Information	PC
▶ **1. Specify the block of 20 lines associated with the 20 line buttons on the system programming console.**		
Select Lines 01-20		F1
Lines 21-40		F2
Lines 41-60		F3
Lines 61-80		F4
▶ **2. Specify touch-tone or rotary signaling for each line/trunk.**		
	Toggle the green LED on or off as required. On = touch-tone Off = rotary	
▶ **3. Return to the System Programming menu.**		
Select Exit three times.		F5 F5 F5

Tie Trunk Dial Tone

Use this procedure to specify whether the system provides dial tone for people calling in on a tie trunk. The settings are remote (system provides dial tone) and local (system does not provide dial tone).

Summary: Tie Trunk Dial Tone

Programmable by	System Manager
Mode	All
Idle Condition	Not required
Planning Form	Form 3c, Incoming Trunks: Tie
Factory Setting	Remote
Valid Entries	Remote, Local
Inspect	Yes
Copy Option	Yes
Console Procedure	To program a single line/trunk: LinesTrunks→TIE Lines→Dialtone→Entry Mode→ Dial trunk no.→Enter or Delete→Exit→Exit→Exit To program a block of lines/trunks: LinesTrunks→TIE Lines→Dialtone→Select block of lines/trunks→Toggle LED On/Off→Exit→Exit→Exit

PC Procedure

To program a single line/trunk:
F4 → F2 → F8 → F6 → Type trunk no. → F10 or F8 → F5 → F5

To program a block of lines/trunks:
F4 → F2 → F8 → Select block of lines → Toggle letter G On/Off → F5 → F5 → F5

Procedure: Tie Trunk Dial Tone

Console/Display Instructions	Additional Information	PC
1. Select the Lines and Trunks menu.		
System Programming: >		
Make a selection		
System Extensions		
SysRenumber Options		
Operator Tables		
LinesTrunks AuxEquip		
Exit NightSrvce		F4
2. Select Tie Lines.		
Lines and Trunks: >		
Make a selection		
LS/GS/DSL PRI		
TIE Lines Copy		
TT/LS Disc RemoteAccss		
DID Pools		
Exit Toll Type		F2

Console Display/Instructions	Additional Information	PC

▶ **3. Select Dial Tone.**

```
TIE Trunks:
Make a selection
Direction        Inmode
Intype           Outmode
Outtype          Dialtone
E&M Signal       AnsSupvr
Exit             Disconnect
```

F8

▶ **4. Specify the line(s).** ● ◆

```
**** Dial Tone:
Enter trunk w/Remote Dial
Lines 01-20      Entry Mode
Lines 21-40
Lines 41-60
Lines 61-80
Exit
```

**** = option name selected in Step 3

For a single line, go to
● Single Line Procedure.

For a block of lines, go to
◆ Block Procedure.

● Single Line Procedure

Console/Display Instructions	Additional Information	PC

▶ **1. Specify entry mode.**

Select Entry Mode. F6

▶ **2. Enter the number of the trunk (*nnn*).**

```
OutTrunk Dial :
Enter Trunks w/TouchTone

                 Delete
Backspace
Exit             Enter
```

Dial or type [*nnn*].

Console Display/Instructions	Additional Information	PC
▶ **3. Assign or remove remote dial tone.**		
Select Enter or		F10
Delete.		F8
	You may continue to assign or remove remote dial tone from additional lines/trunks by repeating Steps 2 and 3.	
▶ **4. Return to the System Programming menu.**		
Select Exit three times.		F5 F5 F5

◆ **Block Procedure**

Console Display/Instructions	Additional Information	PC
▶ **1. Specify the block of 20 lines associated with the 20 buttons on the system programming console.**		
Select Lines 01-20		F1
Lines 21-40		F2
Lines 41-60		F3
Lines 61-80		F4
▶ **2. Specify remote or local dial signaling for each block.**		
	Toggle the green LED on or off as required. On = remote dial tone Off = local dial tone	
▶ **3. Return to the System Programming menu.**		
Select Exit three times.		F5 F5 F5

Tie Trunk Answer Supervision Time

Use this procedure to specify the tie trunk answer supervision time in milliseconds. This is the time limit for the called system to respond.

Summary: Tie Trunk Answer Supervision Time

Programmable by	System Manager
Mode	All
Idle Condition	Not required
Planning Form	Form 3c, Incoming Trunks: Tie
Factory Setting	300 ms
Valid Entries	20 to 4,800 ms, in increments of 20 ms
Inspect	No
Copy Option	Yes
Console Procedure	LinesTrunks→TIE Lines→AnsSupvr→Dial trunk no.→ Enter→**Drop**→Dial no. of ms→Enter→Exit→Exit
PC Procedure	[F4]→[F2]→[F9]→Type trunk no.→[F10]→[Alt] + [P]→ Type no. of ms→[F10]→[F5]→[F5]

Procedure: Tie Trunk Answer Supervision Time

Console/Display Instructions	Additional Information	PC
▶ **1. Select the Lines and Trunks menu.**		
System Programming: > Make a selection System Extensions SysRenumber Options Operator Tables LinesTrunks AuxEquip Exit NightSrvce		[F4]

Console Display/Instructions **Additional Information** **PC**

▶ 2. Select Tie Lines.

```
Lines and Trunks:        >
Make a selection
LS/GS/DSL        PRI
TIE Lines        Copy
TT/LS Disc       RemoteAccss
DID              Pools
Exit             Toll Type
```

F2

▶ 3. Select Answer Supervision.

```
TIE Trunks:
Make a selection
Direction        Inmode
Intype           Outmode
Outtype          Dialtone
E&M Signal       AnsSupvr
Exit             Disconnect
```

F9

▶ 4. Enter a tie trunk number.

```
Answer Supv:
Enter trunk for assigmt



Backspace
Exit             Enter
```

Dial or type:
Trunk number [*nnn*]
Slot and port number ∗[*sspp*]
Logical ID number #[*nnn*]

▶ 5. Save your entry.

Select Enter.

F10

Console Display/Instructions	Additional Information	PC
▶ **6. Erase the current number of milliseconds (*nnnn*).**		
Trunk *xxxx*: Enter AnsSupervisionTime (20-4800, increment 20) *nnnn* Backspace Next Exit Enter	*xxxx* = trunk entered in Step 4 Press **Drop**.	Alt+P
▶ **7. Enter the answer supervision time (*nnnn* = 0 to 4,800 ms, increments of 20).**		
Trunk *xxxx*: Enter AnsSupervisionTime (20-4800, increment 20) Backspace Next Exit Enter	*xxxx* = trunk entered in Step 4 Dial or type [*nnnn*].	
▶ **8. Continue to assign the supervision time to another trunk or go to Step 9.**		
Select Next.		F9
	Return to Step 6. The next trunk is displayed on Line 1.	
▶ **9. Save your entry.**		
Select Enter.		F10
▶ **10. Return to the System Programming menu.**		
Select Exit twice.		F5 F5

Disconnect Time

Use this procedure to specify the tie trunk disconnect time limit in milliseconds.

Summary: Disconnect Time

Programmable by	System Manager
Mode	All
Idle Condition	Not required
Planning Form	Form 3c, Incoming Trunks: Tie
Factory Setting	300 ms
Valid Entries	140 to 2,400 ms
Inspect	No
Copy Option	Yes
Console Procedure	LinesTrunks→TIE Lines→Disconnect→Dial trunk no.→ Enter→**Drop**→Dial no. of ms→Enter→Exit→Exit
PC Procedure	F4 →F2 →F10 →Type trunk no.→F10 →Alt + P → Type no. of ms→F10 →F5 →F5

Procedure: Disconnect Time

Console/Display Instructions	Additional Information	PC
1. Select the Lines and Trunks menu.		
System Programming: > Make a selection System Extensions SysRenumber Options Operator Tables LinesTrunks AuxEquip Exit NightSrvce		F4

Console Display/Instructions **Additional Information** **PC**

▶ 2. Select Tie Lines.

```
Lines and Trunks:        >
Make a selection
LS/GS/DSL        PRI
TIE Lines        Copy
TT/LS Disc       RemoteAccss
DID              Pools
Exit             Toll Type
```

F2

▶ 3. Select Disconnect.

```
TIE Trunks:
Make a selection
Direction        Inmode
Intype           Outmode
Outtype          Dialtone
E&M Signal       AnsSupvr
Exit             Disconnect
```

F10

▶ 4. Enter the trunk number.

```
Disconnect:
Enter trunk for assignmt



Backspace
Exit             Enter
```

Dial or type:
Trunk number [*nnn*]
Slot and port number ∗[*sspp*]
Logical ID number #[*nnn*]

▶ 5. Save your entry.

Select Enter.

F10

Console Display/Instructions	Additional Information	PC
▶ **6. Erase the current disconnect time (*nnnn*).**		
Trunk *xxxx*: Enter Disconnect Time (140-2400) *nnnn* Backspace Next Exit Enter	*xxxx* = trunk entered in Step 4	
	Press **Drop**.	Alt + P
▶ **7. Enter the disconnect time (*nnnn* = 140 to 2,400 ms).**		
Trunk *xxxx*: Enter Disconnect Time (140-2400) Backspace Next Exit Enter	*xxxx* = trunk entered in Step 4	
	Dial or type [*nnnn*].	↵
▶ **8. Continue to assign the disconnect time to another trunk or go to Step 9.**		
Select Next.		F9
	Return to Step 6. The next trunk is displayed on Line 1.	
▶ **9. Save your entry.**		
Select Enter.		F10
▶ **10. Return to the System Programming menu.**		
Select Exit twice.		F5 F5

DID Trunks

This section covers programming DID trunks and includes procedures for the following:

- Block Assignment
- DID Trunk Type
- Disconnect Time
- Expected Digits
- Delete Digits
- Add Digits
- Signaling
- Invalid Destination

NOTE:
These procedures apply to Hybrid/PBX mode only.

Block Assignment

Use this procedure to assign each DID trunk connected to the system to either Block 1 or Block 2.

Summary: Block Assignment

Programmable by	System Manager
Mode	Hybrid/PBX
Idle Condition	Not required
Planning Form	Form 3d, Incoming Trunks: DID
Factory Setting	Block 1
Valid Entries	Block 1, Block 2
Inspect	Yes
Copy Option	Yes
Console Procedure	To program a single line/trunk: LinesTrunks→DID→Block→Dial trunk block no.→ Enter→ Entry Mode→Type the line/trunk no.→ Enter or Delete→ Exit→Exit→Exit To program a block of lines/trunks: LinesTrunks→DID→Block→Dial trunk block no.→ Enter→ Select trunk lines→Toggle LED On/Off→Enter→ Exit→Exit→Exit

PC Procedure

To program a single line/trunk:
F4 → F4 → F1 → Type trunk block no. → F10 →
Type the line/trunk no. → F10 or F8 → F5 → F5 → F5

To program a block of lines/trunks:
F4 → F4 → F1 → Type trunk block no. → F10 → Select trunk lines → Toggle letter G On/Off → F10 → F5 → F5 → F5

Procedure: Block Assignment

Console/Display Instructions	Additional Information	PC
1. Select the Lines and Trunks menu.		
System Programming: > Make a selection System Extensions SysRenumber Options Operator Tables LinesTrunks AuxEquip Exit NightSrvce		F4
2. Select DID.		
Lines and Trunks: > Make a selection LS/GS/DSL PRI TIE Lines Copy TT/LS Disc RemoteAccss DID Pools Exit Toll Type		F4

Console Display/Instructions	Additional Information	PC

▶ 3. Select Block Assignment.

```
Direct Inward Dial:
Make a selection
Block          DeleteDigit
Type           Add Digits
Disconnect     Signaling
ExpectDigit    InvalDstn
Exit
```

F1

▶ 4. Enter the trunk block (*n* = 1 or 2).

```
DID Block Assignment:
Enter the block number
(1-2)

Backspace
Exit           Enter
```

Dial or type [*n*].

▶ 5. Save your entry.

Select Enter.

F10

▶ 6. Specify the line(s).

```
Direct Inward Dialing:
Assign lines to blocks
Lines 01-20  Entry Mode
Lines 21-40
Lines 41-60
Lines 61-80
Exit
```

For a single line, go to
● Single Line Procedure.

For a block of lines, go to
◆ Block Procedure.

● Single Line Procedure

Console Display/Instructions	Additional Information	PC
▶ **1. Specify entry mode.**		
Select Entry Mode.		F6
▶ **2. Enter the trunk number.**		
Block *x*: Enter line/trunk number Delete Backspace Next Exit Enter	*x* = block entered in Step 4	
	Dial or type [*nnn*].	
▶ **3. Assign or remove the trunk.**		
Select Enter or		F10
Delete.		F8
	You may continue to assign or remove DID trunks from the block by repeating Steps 2 and 3.	
▶ **4. Continue to enter trunks for the other trunk block or go to Step 5.**		
Select Next.		F9
	Return to Step 2. The block is displayed on Line 1.	
▶ **5. Save your entry.**		
Select Enter.		F10
▶ **6. Return to the System Programming menu.**		
Select Exit three times.		F5 F5 F5

◆ **Block Procedure**

Console Display/Instructions	Additional Information	PC
▶ **1. Specify the DID trunks associated with 20 buttons on the system programming console.**		
Select Lines 01-20		F1
Lines 21-40		F2
Lines 41-60		F3
Lines 61-80		F4
▶ **2. Assign or remove the trunk.**		
	Toggle the green LED on or off as required. On = assign DID trunk to block Off = remove DID trunk from block	
▶ **3. Return to the System Programming menu.**		
Select Exit three times.		F5 F5 F5

DID Trunk Type

Use this procedure to specify the DID trunk type as either immediate-start or wink-start. Wink-start is more reliable if the local telephone company supports it.

Summary: DID Trunk Type

Programmable by	System Manager
Mode	Hybrid/PBX
Idle Condition	DID trunk idle
Planning Form	Form 3d, Incoming Trunks: DID
Factory Setting	Wink-start
Valid Entries	Immediate-start, Wink-start
Inspect	No
Copy Option	No
Console Procedure	LinesTrunks→DID→Type→Dial trunk block no.→ Enter→Immed or Wink→Enter→Exit→Exit
PC Procedure	F4→F4→F2→Type trunk block no.→F10→F1 or F2→ F10→F5→F5

Procedure: DID Trunk Type

Console/Display Instructions	Additional Information	PC
▶ **1. Select the Lines and Trunks menu.**		
System Programming: >		
Make a selection		
System Extensions		
SysRenumber Options		
Operator Tables		
LinesTrunks AuxEquip		
Exit NightSrvce		F4
▶ **2. Select DID.**		
Lines and Trunks: >		
Make a selection		
LS/GS/DSL PRI		
TIE Lines Copy		
TT/LS Disc RemoteAccss		
DID Pools		
Exit Toll Type		F4
▶ **3. Select Type.**		
Direct Inward Dial:		
Make a selection		
Block DeleteDigit		
Type Add Digits		
Disconnect Signaling		
ExpectDigit InvalDstn		
Exit		F2
▶ **4. Enter the trunk block (*n* = 1 or 2).**		
DID Trunk Type:		
Enter block number (1-2)		
Backspace		
Exit Enter	Dial or type [*n*].	

Console Display/Instructions	Additional Information	PC
▶ **5. Save your entry.**		
Select Enter.		F10
▶ **6. Specify immediate-start or wink-start.**		
DID Block *x*: Select type Immed Wink Next Exit Enter	*x* = block number entered in Step 4	
	Select Immed or Wink.	F1 F2
▶ **7. Continue to specify trunk type for the other trunk block or go to Step 8.**		
Select Next.		F9
	Return to Step 6. The next trunk is displayed on Line 1.	
▶ **8. Save your entry.**		
Select Enter.		F10
▶ **9. Return to the System Programming menu.**		
Select Exit twice.		F5 F5

Disconnect Time

Use this procedure to specify the DID trunk disconnect time limit in milliseconds.

Summary: Disconnect Time

Programmable by	System Manager
Mode	Hybrid/PBX
Idle Condition	Not required
Planning Form	Form 3d, Incoming Trunks: DID
Factory Setting	500 ms
Valid Entries	10 to 2,400 ms, in increments of 10 ms
Inspect	No
Copy Option	Yes

Console Procedure LinesTrunks→DID→Disconnect→Dial trunk no.→ Enter→**Drop**→Dial no. of ms→Enter→Exit→Exit

PC Procedure [F4]→[F4]→[F3]→Type trunk no.→[F10]→[Alt] + [P]→ Type no. of ms→[F10]→[F5]→[F5]

Procedure:Disconnect Time

Console/Display Instructions	Additional Information	PC
1. Select the Lines and Trunks menu.		
System Programming: >		
Make a selection		
System Extensions		
SysRenumber Options		
Operator Tables		
LinesTrunks AuxEquip		
Exit NightSrvce		[F4]
2. Select DID.		
Lines and Trunks: >		
Make a selection		
LS/GS/DSL PRI		
TIE Lines Copy		
TT/LS Disc RemoteAccss		
DID Pools		
Exit Toll Type		[F4]
3. Select Disconnect.		
Direct Inward Dial:		
Make a selection		
Block DeleteDigit		
Type Add Digits		
Disconnect Signaling		
ExpectDigit InvalDstn		
Exit		[F3]

Console Display/Instructions **Additional Information** **PC**

▶ **4. Enter the DID trunk.**

```
DID Disconnect Time:
Enter the trunk number



Backspace
Exit            Enter
```

Dial or type:
Trunk number [*nnn*]
Slot and port number ∗[*sspp*]
Logical ID number #[*nnn*]

▶ **5. Save your entry.**

Select Enter. F10

▶ **6. Erase the current disconnect time (*nnn*).**

```
DID Trunk xxx:
Enter disconnect time
(10-2400,incrmnts 10)
nnn

Backspace       Next
Exit            Enter
```

xxx = trunk entered in Step 4

Press **Drop**. Alt + P

▶ **7. Enter the disconnect time in milliseconds (*nnn* = 10 to 2,400 ms, in increments of 10).**

Dial or type [*nnn*].

▶ **8. Continue to specify the disconnect time for another DID trunk or go to Step 9.**

Select Next. F9

Return to Step 6. The next DID trunk is displayed on Line 1.

▶ **9. Save your entry.**

Select Enter. F10

▶ **10. Return to the System Programming menu.**

Select Exit twice. F5 F5

Expected Digits

Use this procedure to tell the system how many digits are sent by the local telephone company.

NOTE:
In Release 6.0 and later systems, if the dialed digits received on a DID trunk correspond to a non-local extension number, the call is routed to that extension.

SECURITY ALERT:
In Release 6.0 and later systems, do not assign a non-local remote ARS code to the non-local dial plan. Doing so would allow DID callers to use the private network to make outside calls. For more information, see *"Uniform Dial Plan Routing" on page 3–565*.

Summary: Expected Digits

Programmable by	System Manager
Mode	Hybrid/PBX
Idle Condition	Not required
Planning Form	Form 3d, Incoming Trunks: DID
Factory Setting	3 digits
Valid Entries	1 to 4 digits
Inspect	No
Copy Option	No
Console Procedure	LinesTrunks→DID→ExpectDigit→Dial trunk block no.→ Enter→**Drop**→Dial no. of digits→ Enter→Exit→Exit
PC Procedure	F4→F4→F4→Type trunk block no.→F10→Alt + P→ Type no. of digits F10→F5→F5

Procedure: Expected Digits

Console/Display Instructions	Additional Information	PC

▶ 1. Select the Lines and Trunks menu.

```
System Programming:      >
Make a selection
System          Extensions
SysRenumber     Options
Operator        Tables
LinesTrunks     AuxEquip
Exit            NightSrvce
```

F4

▶ 2. Select DID.

```
Lines and Trunks:        >
Make a selection
LS/GS/DSL       PRI
TIE Lines       Copy
TT/LS Disc      RemoteAccss
DID             Pools
Exit            Toll Type
```

F4

▶ 3. Select Expected Digits.

```
Direct Inward Dial:
Make a selection
Block           DeleteDigit
Type            Add Digits
Disconnect      Signaling
ExpectDigit     InvalDstn
Exit
```

F4

▶ 4. Enter the trunk block (*n* = 1 or 2).

```
DID Expected Digits:
Enter block number (1-2)



Backspace
Exit            Enter
```

Dial or type [*n*].

Console Display/Instructions	Additional Information	PC
▶ **5. Save your entry.**		
Select Enter.		F10
▶ **6. Erase the current number of expected digits (*n*).**		
DID Block *x*: Enter number of expected digits (1-4) *n* Backspace Next Exit Enter	*x* = block entered in Step 4	
	Press **Drop**.	Alt+P
▶ **7. Enter the number of expected digits (*n* = 1 to 4).**		
Dial or type [*n*].		⏎
▶ **8. Continue to specify expected digits for the other trunk block or go to Step 9.**		
Select Next.		F9
	Return to Step 6. The next block is displayed on Line 1.	
▶ **9. Save your entry.**		
Select Enter.		F10
▶ **10. Return to the System Programming menu.**		
Select Exit twice.		F5 F5

Delete Digits

Use this procedure to specify the number of leading digits to be deleted from the digits sent by the local telephone company. Use this procedure when the number of digits sent by the telephone company is greater than the number in the system numbering plan.

Summary: Delete Digits

Programmable by	System Manager
Mode	Hybrid/PBX
Idle Condition	Not required
Planning Form	Form 3d, Incoming Trunks: DID
Factory Setting	0 digits
Valid Entries	0 to 4 digits
Inspect	No
Copy Option	No
Console Procedure	`LinesTrunks`→`DID`→`DeleteDigit`→Dial trunk block no.→`Enter`→**Drop**→Dial no. of digits→`Enter`→`Exit`→`Exit`
PC Procedure	[F4]→[F4]→[F6]→Type trunk block no.→[F10]→[Alt] + [P]→Type no. of digits→[F10]→[F5]→[F5]

Procedure: Delete Digits

Console Display/Instructions	Additional Information	PC
1. Select the Lines and Trunks menu.		

`System Programming: >`
`Make a selection`
`System Extensions`
`SysRenumber Options`
`Operator Tables`
`LinesTrunks AuxEquip`
`Exit NightSrvce`
		[F4]

Console Display/Instructions	Additional Information	PC

▶ 2. Select DID.

```
Lines and Trunks:        >
Make a selection
LS/GS/DSL       PRI
TIE Lines       Copy
TT/LS Disc      RemoteAccss
DID             Pools
Exit            Toll Type
```

F4

▶ 3. Select Delete Digit.

```
Direct Inward Dial:
Make a selection
Block           DeleteDigit
Type            Add Digits
Disconnect      Signaling
ExpectDigit     InvalDstn
Exit
```

F6

▶ 4. Enter the trunk block (*n* = 1 or 2).

```
DID Delete Digits:
Enter block number (1-2)



Backspace
Exit            Enter
```

Dial or type [*n*].

▶ 5. Save your entry.

Select Enter.

F10

▶ 6. Erase the current number of delete digits (*n*).

```
DID Block x:
Enter number of digits
to delete (0-4)
n

Backspace       Next
Exit            Enter
```

x = block entered in Step 4

Press **Drop.**

Alt + P

Console Display/Instructions	Additional Information	PC
▶ **7. Enter the number of digits to delete (*n* = 0 to 4).**		
Dial or type [*n*].		
▶ **8. Continue to specify delete digits for the other trunk block or go to Step 9.**		
Select Next.		F9
	Return to Step 6. The next block is displayed on Line 1.	
▶ **9. Save your entry.**		
Select Enter.		F10
▶ **10. Return to the System Programming menu.**		
Select Exit twice.		F5 F5

Add Digits

Use this procedure to specify the number of leading digits that must be added to the digits sent by the local telephone company. Use this procedure when the number of digits sent by the telephone company is fewer than the number in the system numbering plan.

Summary: Add Digits

Programmable by	System Manager
Mode	Hybrid/PBX
Idle Condition	Not required
Planning Form	Form 3d, Incoming Trunks: DID
Factory Setting	0
Valid Entries	1 to 9999
Inspect	No
Copy Option	No
Console Procedure	LinesTrunks→DID→Add Digits→Dial trunk block no.→Enter→**Drop**→Dial added digits→Enter→Exit→Exit
PC Procedure	[F4]→[F4]→[F7]→Type trunk block no.→[F10]→[Alt] + [P]→Type added digits→[F10]→[F5]→[F5]

Procedure: Add Digits

Console Display/Instructions	Additional Information	PC
▶ **1. Select the Lines and Trunks menu.**		
System Programming: > Make a selection System Extensions SysRenumber Options Operator Tables LinesTrunks AuxEquip Exit NightSrvce		[F4]

Console Display/Instructions **Additional Information** **PC**

▶ 2. Select DID.

```
Lines and Trunks:        >
Make a selection
LS/GS/DSL       PRI
TIE Lines       Copy
TT/LS Disc      RemoteAccss
DID             Pools
Exit            Toll Type
```

F4

▶ 3. Select Add Digits.

```
Direct Inward Dial:
Make a selection
Block           DeleteDigit
Type            Add Digits
Disconnect      Signaling
ExpectDigit     InvalDstn
Exit
```

F7

▶ 4. Enter the trunk block (*n = 1 or 2*).

```
DID Add Digits:
Enter block number (1-2)



Backspace
Exit            Enter
```

Dial or type [*n*].

▶ 5. Save your entry.

Select Enter.

F10

Console Display/Instructions	Additional Information	PC
▶ **6. Erase the current number of added digits (*nnn*).**		
DID Block *x*: Enter digits to add *nnn* Backspace Next Exit Enter	*x* = block entered in Step 4	
	Press **Drop**.	Alt + P
▶ **7. Enter the number of digits to add (*n* = 1 to 9999).**		
Dial or type [*n*].		
▶ **8. Continue to specify added digits for the other trunk block or go to Step 9.**		
Select Next.		F9
	Return to Step 6. The next block is displayed on Line 1.	
▶ **9. Save your entry.**		
Select Enter.		F10
▶ **10. Return to the System Programming menu.**		
Select Exit twice.		F5 F5

Signaling

Use this procedure to specify whether the type of dialing signal from the local telephone company is touch-tone or rotary. Touch-tone dial mode cannot be programmed for immediate-start DID trunks.

Touch-tone single-line telephone users cannot make calls by using individual trunks programmed for rotary operation. The touch-tone signals generated from the telephone while dialing are transmitted to the central office at the same time the rotary signals are sent to the system. The central office receives both signals and cannot process the call.

Summary: Signaling

Programmable by	System Manager
Mode	Hybrid/PBX
Idle Condition	Not Required
Planning Form	Form 3d, Incoming Trunks: DID
Factory Setting	Rotary
Valid Entries	Rotary, Touch-tone
Inspect	No
Copy Option	No
Console Procedure	LinesTrunks→DID→Signaling→Dial trunk block no.→ Enter→Rotary or TouchTone→Enter→Exit→Exit
PC Procedure	F4→F4→F8→Type trunk block no.→F10→F1 or F2→ F10→F5→F5

Procedure: Signaling

Console Display/Instructions	Additional Information	PC
▶ 1. Select the Lines and Trunks menu.		
System Programming: > Make a selection System Extensions SysRenumber Options Operator Tables LinesTrunks AuxEquip Exit NightSrvce		F4
▶ 2. Select DID.		
Lines and Trunks: > Make a selection LS/GS/DSL PRI TIE Lines Copy TT/LS Disc RemoteAccss DID Pools Exit Toll Type		F4

Console Display/Instructions	Additional Information	PC

▶ 3. Select Signaling.

```
Direct Inward Dial:
Make a selection
Block          DeleteDigit
Type           Add Digits
Disconnect     Signaling
ExpectDigit    InvalDstn
Exit
```

F8

▶ 4. Enter the trunk block (*n* = 1 or 2).

```
DID Signaling
Enter Block number (1-2)



Backspace
Exit           Enter
```

Dial or type [*n*].

▶ 5. Save your entry.

Select Enter. F10

▶ 6. Specify Rotary or Touch Tone.

```
DID Block x:
Select one
Rotary
Touch Tone


               Next
Exit           Enter
```

x = block entered in Step 4

Select Rotary or F1
TouchTone. F2

▶ 7. Continue to specify type for the other trunk block or go to Step 8.

Select Next. F9

Return to Step 6. The next block is displayed on Line 1.

Console Display/Instructions	Additional Information	PC
▶ **8. Save your entry.**		
Select Enter.		F10
▶ **9. Return to the System Programming menu.**		
Select Exit twice.		F5 F5

Invalid Destination

Use this procedure to specify where to direct outside calls (received on DID trunks) for unassigned extension numbers. Calls can be either directed to a backup position (normally the primary system operator) or given a fast busy signal. See "QCC Operator to Receive Call Types" on page 3–379 for information on assigning a backup position.

Summary: Invalid Destination

Programmable by	System Manager
Mode	Hybrid/PBX
Idle Condition	Not required
Planning Form	Form 3d, incoming Trunks: DID
Factory Setting	Backup (calls are sent to the primary system operator)
Valid Entries	Backup, Fast Busy
Inspect	No
Copy Option	No
Console Procedure	LinesTrunks→DID→InvalDstn→Send to Backup Extension or Return Fast Busy→Enter→Exit→Exit
PC Procedure	F4 → F4 → F9 → F1 or F2 → F10 → F5 → F5

Procedure: Invalid Destination

Console Display/Instructions	Additional Information	PC
▶ **1. Select the Lines and Trunks menu.**		
System Programming: > Make a selection System Extensions SysRenumber Options Operator Tables LinesTrunks AuxEquip Exit NightSrvce		F4
▶ **2. Select DID.**		
Lines and Trunks: > Make a selection LS/GS/DSL PRI TIE Lines Copy TT/LS Disc RemoteAccss DID Pools Exit Toll Type		F4
▶ **3. Select Invalid Destination.**		
Direct Inward Dial: Make a selection Block DeleteDigit Type Add Digits Disconnect Signaling ExpectDigit InvalDstn Exit		F9
▶ **4. Specify how to handle calls directed to an invalid destination.**		
Invalid Destination DID: Select one Send to Backup Extension Return Fast Busy Exit Enter	Select Send to Backup Extension or Return Fast Busy.	F1 F2

Console Display/Instructions	Additional Information	PC
▶ **5. Save your entry.**		
Select `Enter`.		F10
▶ **6. Return to the System Programming menu.**		
Select `Exit` twice.		F5 F5

PRI Facilities

The procedures in this section provide the steps for programming the following options for Primary Rate Interface (PRI) facilities connected to a 100D (DS1) module:

- Switch Type
- Telephone Number
- B-Channel Groups
- Network Service
- Copy Telephone Number to Send
- Incoming Routing
- Telephone Number to Send
- Test Telephone Number
- Timers and Counters
- Terminal Equipment Identifier
- Dial Plan Routing
- Outgoing Tables
- Network Selection Tables
- Special Services Tables
- Call-by-Call Service Table

NOTE:
If you are adding PRI facilities to an existing system, certain values must be set correctly. To inspect or change these values, see "DS1 Facilities" on page 3–105. Do not start these procedures until you have checked the following:

- Type of DS1 Facility must be set to PRI.
- Frame format must be specified correctly.
- Zero code suppression must be specified correctly.
- Clock synchronization source must be set to loop (derived from the T1 line).

The settings for frame format and zero code suppression must be consistent with the options selected when the PRI connection was ordered.

If you are using ARS in connection with PRI, make sure you select voice, data, or voice and data, as appropriate, when you perform the ARS "Voice and/or Data Routing" procedure found in "Automatic Route Selection."

Switch Type

In Release 4.2 and later systems, use this procedure to specify the PRI connection through the following switch types:

- 4ESS
- 5ESS
- Nortel DMS-100 BCS 36 for local exchange carrier services
- Nortel DMS-250 serving the MCI network
- Digital Switch Corporation DEX600E serving the MCI network

In Release 6.0 and later systems, two additional switch types allow you to specify additional switch options in order to set up a PRI tandem trunk that connects two MERLIN LEGEND Communications Systems or a MERLIN LEGEND Communications System and a DEFINITY Communications System. The two additional options are the following:

- Legend-NTWK
- Legend-PBX

To set up a PRI tandem trunk, one system is specified as operating in PBX mode and the other as operating in network mode. When you program this switch type, you specify the type of switch at the *other* end of the PRI trunk, not the local switch. The slot number that you enter is the slot number on the local system.

The following rules apply to PRI tandem trunks in PBX or network mode:

- A single unused B-channel group number is automatically assigned to all 23 B-channels on the trunk; B-channels may be removed or added (for more information, see "B-Channel Groups" on page 3–190).The group can still exist, even if it includes no B-channels.
- PRI Dial Plan Routing does not apply for incoming calls on the trunk. Incoming routing is automatically set to Route Directly to UDP for B-channels in the automatically assigned group; this cannot be changed as long as the Legend-PBX or Legend-NTWK switch type is in effect (see "Incoming Routing" on page 3–206). However, local extensions need not be included in the UDP Routing table.
- PRI outgoing tables do not apply to outgoing calls on the trunk.
- The system automatically assigns Electronic Tandem Network (ETN) as the network service for the B-channel group that is automatically assigned to the PRI tandem trunk; this setting cannot be changed as long as the switch type is in effect (see "Network Service" on page 3–196).
- The Copy Telephone Number to Send setting is set to Do Not Copy for the PRI tandem trunk B-channel group; this setting cannot be changed as long as the switch type is in effect (see "Copy Telephone Number to Send" on page 3–203).

Summary: Switch Type

Programmable by	System Manager
Mode	Hybrid/PBX
Idle Condition	Not required
Planning Form	Form 3b, Incoming Trunks: DS1 Connectivity (100D module)
Factory Setting	4ESS
Valid Entries	Not applicable
Inspect	Yes
Copy Option	No
Console Procedure	`LinesTrunks`→`PRI`→`SwitchType`→Dial slot no.→ `Enter`→Specify switch type→`Enter`→`Exit`→`Exit`
PC Procedure	[F4]→[F6]→[F9]→Type slot no.→[F10]→ Specify switch type→[F10]→[F5]→[F5]

Procedure: Switch Type

Console Display/Instructions	Additional Information	PC

1. Select the Lines and Trunks menu.

```
System Programming:      >
Make a selection
System          Extensions
SysRenumber     Options
Operator        Tables
LinesTrunks     AuxEquip
Exit            NightSrvce
```

F4

2. Select PRI.

```
Lines and Trunks:        >
Make a selection
LS/GS/DSL       PRI
TIE Lines       Copy
TT/LS Disc      RemoteAccss
DID             Pools
Exit            Toll Type
```

F6

3. Select Switch Type.

```
PRI Lines:
Make a selection
PhoneNumber     Protocol
B-ChannlGrp     DialPlanRtg
NumbrToSend     OutgoingTbl
Test TelNum     SwitchType
Exit
```

F9

4. Enter the slot number in the control unit (*ss* = 1 to 17).

```
PRI Slot Number:
Enter slot number (1-17):




Backspace
Exit            Enter
```

Dial or type:
Slot number [*ss*]

Console Display/Instructions	Additional Information	PC
▶ **5. Save your entry.**		
Select Enter.		F10
▶ **6. Specify the switch type.**		

```
Slot xx PRI Switch Type:
Select one
4ESS          DEX600E
5ESS          Legend-Ntwk
DMS-250       Legend-PBX
DMS-100
Exit
```

Press the button or function key next to your selection.

▶ **7. Save your entry.**		
Select Enter.		F10
▶ **8. Return to the System Programming menu.**		
Select Exit twice.		F5 F5

Telephone Number

Use this procedure to assign a string of up to 12 digits to each PRI channel. This string must match the number sent by the network (that is, the number provided by the PRI service provider) to indicate the number dialed by an outside caller. The system uses this number to route the call to the correct destination, which means that the number assigned to each channel in the same B-channel group must be unique. Note also that the number cannot be the same as the associated test telephone number.

Summary: Telephone Number

Programmable by	System Manager
Mode	Hybrid/PBX, Key
Idle Condition	Not required
Planning Form	Form 3b, Incoming Trunks: DS1 Connectivity (100D module)
Factory Setting	No digits
Valid Entries	Up to 12 digits (any combination of 0 to 9)
Inspect	No
Copy Option	No

Console Procedure LinesTrunks→PRI→PhoneNumber→Dial trunk no.→ Enter→**Drop**→Dial telephone no.→Enter→Exit→Exit

PC Procedure [F4]→[F6]→[F1]→Type trunk no.→[F10]→[Alt] + [P]→ Type telephone no.→[F10]→[F5]→[F5]

Procedure: Telephone Number

Console Display/Instructions	Additional Information	PC
1. Select the Lines and Trunks menu.		
System Programming: >		
Make a selection		
System Extensions		
SysRenumber Options		
Operator Tables		
LinesTrunks AuxEquip		
Exit NightSrvce		[F4]
2. Select PRI.		
Lines and Trunks: >		
Make a selection		
LS/GS/DSL PRI		
TIE Lines Copy		
TT/LS Disc RemoteAccss		
DID Pools		
Exit Toll Type		[F6]
3. Select Phone Number.		
PRI Lines:		
Make a selection		
PhoneNumber Protocol		
B-ChannlGrp DialPlanRtg		
NumbrToSend OutgoingTbl		
Test TelNum SwitchType		
Exit		[F1]

Console Display/Instructions	Additional Information	PC
▶ **4. Enter the line number.**		
PRI Phone Number: Enter line number Backspace Exit Enter	Dial or type: Trunk number [*nnn*] Slot and port number *[*sspp*] Logical ID number #[*nnn*]	
▶ **5. Save your entry.**		
Select Enter.		F10
▶ **6. Erase the current telephone number (*N*) *if one is assigned.***		
Line *xxxx*: Enter phone number *N* Backspace Next Exit Enter	*xxxx* = line number entered in Step 4 Press **Drop.**	Alt + P
▶ **7. Enter a telephone number of up to 12 digits to be assigned to the channel (*N* = any combination of 0 to 9).**		
Dial or type [*N*].		
▶ **8. Continue to assign the telephone number to another PRI channel or go to Step 9.**		
Select Next.		F9
	Return to Step 6. The next PRI Channel is displayed on Line 1.	
▶ **9. Save your entry.**		
Select Enter.		F10
▶ **10. Return to the System Programming menu.**		
Select Exit twice.		F5 F5

B-Channel Groups

Use this procedure to perform the following:

- Assign B-channels to a group.
- Associate individual ISDN channels (that can place and receive calls) on the B-channels in each group.

B-channels are partitioned into trunk groups when PRI service is ordered. The trunk groups defined when service is ordered must match the B-channel groups defined when the MERLIN LEGEND Communications System is programmed.

NOTE:
In Release 6.0 and later systems, when the PRI switch type is set to Legend-PBX or Legend-NTWK, all B-channels for a PRI tandem trunk are automatically assigned to a single unused B-channel group. If your private network includes drop-and-insert hardware between the networked switches, use this procedure to remove a dropped B-channel from the group, after the switch type has been programmed and the B-channels automatically assigned. This equipment must never drop channel 24, which provides necessary signalling for the B-channels.

Each B-channel can be assigned to only one group, and each ISDN channel can be associated with only one group. Up to 80 B-channel groups can be established.

Each group can contain up to 23 channels; however, all channels assigned must signal through the same D-channel (that is, must be connected to the same 100D module).

CAUTION:
B-channels must be assigned in the order of system search (through the group) for an available channel. To minimize call attempts on the same line or trunk, you must arrange B-channels in the opposite order of the hunting arrangement provided by the network service provider.

B-channels must be identified by control unit slot and port numbers since they are not associated with a line/trunk number or a logical ID.

PRI B-channel groups programmed for line routing perform similarly to loop-start trunks. PRI B-channel groups programmed for dial plan routing perform similarly to DID trunks.

NOTE:
If more lines than B-channels are assigned to a B-channel group, users may experience situations where a line that is idle is not able to seize a B-channel. The user receives a fast busy tone.

Summary: B-Channel Groups

Programmable by	System Manager
Mode	Hybrid/PBX, Key
Idle Condition	Not required
Planning Form	Form 3b, Incoming Trunks: DS1 Connectivity (100D module)
Factory Setting	Not applicable
Valid Entries	Group numbers (1 to 80)
Inspect	Yes
Copy Option	No
Console Procedure	To program a single line/trunk: LinesTrunks→PRI→B-ChannlGrp→B Channels→ Dial group no.→Enter→Dial B-channel slot and port nos.→ Enter→Lines→Dial group no.→Enter→Entry Mode→ Dial line/trunk no.→Enter→Exit→Exit→Exit To program a block of lines/trunks: LinesTrunks→PRI→B-ChannlGrp→B Channels→ Dial group no.→Enter→Dial B-channel slot and port no.→ Enter→Lines→Dial group no.→Enter→Select specific lines/trunks→Toggle LED On/Off→Exit→Exit→Exit
PC Procedure	To program a single line/trunk: [F4]→[F6]→[F2]→[F1]→Type group no.→Type B-channel slot and port nos.→[F5]→Type group no.→[F10]→[F6]→ Type line/trunk no.→[F10]→[F5]→[F5]→[F5] To program a block of lines/trunks: [F4]→[F6]→[F2]→[F1]→Type group no.→Type B-channel slot and port nos.→[F5]→Type group no.→[F10]→ Select specific lines/trunks→Toggle letter G On or Off→ [F5]→[F5]→[F5]

Procedure: B-Channel Groups

Console Display/Instructions **Additional Information** **PC**

▶ 1. Select the Lines and Trunks menu.

```
System Programming:      >
Make a selection
System          Extensions
SysRenumber     Options
Operator        Tables
LinesTrunks     AuxEquip
Exit            NightSrvce
```

F4

▶ 2. Select PRI.

```
Lines and Trunks:        >
Make a selection
LS/GS/DSL       PRI
TIE Lines       Copy
TT/LS Disc      RemoteAccss
DID             Pools
Exit            Toll Type
```

F6

▶ 3. Select B-Channel Groups.

```
PRI Lines:
Make a selection
PhoneNumber     Protocol
B-ChannlGrp     DialPlanRtg
NumbrToSend     OutgoingTbl
Test TelNum     SwitchType
Exit
```

F2

▶ 4. Select B-Channels.

```
B-Channel Groups:
Make a selection
B Channels      IncomingRtg
Lines
NetworkServ
Copy Number
Exit
```

F1

Console Display/Instructions **Additional Information** **PC**

▶ 5. Enter the B-channel group number (*nn* = 1 to 80).

```
B-Channel Groups:
Enter group number
Backspace
Exit          Enter
```

Dial or type [*nn*].

▶ 6. Save your entry.

Select Enter. F10

▶ 7. Enter the B-channel slot and port number.

```
B Channel Group xx:
Enter B-Channel
                Delete
Backspace       Next
Exit            Enter
```

xx = number entered in Step 5

Dial or type ∗*[sspp].*

▶ 8. Assign or remove the B-channel from the group.

Select Enter or F10
Delete. F8

You may continue to assign or remove additional B-channels from the group by repeating Steps 7 and 8.

▶ 9. Continue to assign B-channels to another group or go to Step 10.

Select Next. F9

Return to Step 7. The next group is displayed on Line 1.

▶ 10. Save your entry.

Select Enter. F10

Console Display/Instructions	Additional Information	PC
▶ **11. Select Lines.**		
B-Channel Groups: Make a selection B Channels IncomingRtg Lines NetworkServ Copy Number Exit		F2
▶ **12. Enter the B-channel group number (*nn = 1 to 80*).**		
B-Channel Groups: Enter group number Backspace Exit Enter	Dial or type [*nn*].	
▶ **13. Save your entry.**		
Select Enter.		F10
▶ **14. Specify the line(s).**	● ◆	
B-Channel Group *xx*: Assign lines Lines 01-20 Entry Mode Lines 21-40 Lines 41-60 Lines 61-80 Exit	*xx* = number entered in Step 12 To select a single line, go to ● Single Line Procedure. To select a block of lines, go to ◆ Block Procedure.	

● Single Line Procedure

Console Display/Instructions	Additional Information	PC
▶ **1. Specify entry mode.**		
Select Entry Mode.		F6
▶ **2. Enter a line number.**		
B-Channel Group *xx*: Enter line number Delete Backspace Next Exit Enter	*xx* = number entered in Step 12	
	Dial or type [*nnn*].	
▶ **3. Assign or remove the line number from the B-channel group.**		
Select Enter or		F10
Delete.		F8
	You may continue to assign or remove additional lines from the B-Channel group by repeating Steps 7 and 8.	
▶ **4. Continue to assign the line number to another B-channel group or go to Step 5.**		
Select Next.		F9
	Return to Step 2. The next group is displayed on Line 1.	
▶ **5. Save your entry.**		
Select Enter.		F10
▶ **6. Return to the System Programming menu.**		
Select Exit three times.		F5 F5 F5

◆ **Block Procedure**

Console Display/Instructions	Additional Information	PC
▶ **1. Specify the block of 20 lines associated with 20 buttons on the system programming console.**		
Select Lines 01-20		F1
Lines 21-40		F2
Lines 41-60		F3
Lines 61-80		F4
▶ **2. Assign the line(s) to the B-channel group.**		
	Toggle the green LED on or off as required. On = lines are assigned to B-channel Off = lines are not assigned to B-channel	
▶ **3. Return to the System Programming menu.**		
Select Exit three times.		F5 F5 F5

Network Service

Use this procedure to specify the type of outgoing service provided by each B-channel group.

NOTES:

1. You can enter a service not shown on the Network Service screen by using the 5-digit binary code that represents the service in the Network Facilities Information Element of ISDN PRI signaling protocol. For information on these codes, contact your service provider. See “Miscellaneous Procedure” included in this network service procedure.

2. In Release 6.0 and later systems, setting the switch type to Legend-PBX or Legend-NTWK automatically assigns the B-channels for the specified PRI tandem trunk to a single unused B-channel group. This group is automatically assigned LEGEND UDP as the general type of network service and Electronic Tandem Network (ETN) as specific LEGEND UDP network service. As long as the switch type for the PRI trunk remains as Legend-PBX or Legend-NTWK, you cannot change the type of network service. For more information about switch types, see “Switch Type” on page 3–184.

Summary: Network Service

Programmable by	System Manager
Mode.	Hybrid/PBX, Key
Idle Condition	Not required
Planning Form	Form 3b, Incoming Trunks: DS1 Connectivity (100D module)
Factory Setting	Not applicable
Valid Entries	AT&T Toll, 5ESS Local, MCI Toll, Miscellaneous, DMS-100 Local, LEGEND UDP
Inspect	Yes
Copy Option	No
Console Procedure	LinesTrunks→PRI→B-ChannlGrp→NetworkServ→ Dial group no.→Enter→Specify network service→ Enter→Exit→Exit→Exit→Exit
PC Procedure	F4→F6→F2→F3→Type group no.→F10→ Specify network service→F10→F5→F5→F5→F5

Procedure: Network Service

Console Display/Instructions	Additional Information	PC

▶ 1. Select the Lines and Trunks menu.

```
System Programming:        >
Make a selection
System          Extensions
SysRenumber     Options
Operator        Tables
LinesTrunks     AuxEquip
Exit            NightSrvce
```

F4

▶ 2. Select PRI.

```
Lines and Trunks:          >
Make a selection
LS/GS/DSL       PRI
TIE Lines       Copy
TT/LS Disc      RemoteAccss
DID             Pools
Exit            Toll Type
```

F6

Console Display/Instructions **Additional Information** **PC**

▶ 3. Select B-Channel Groups.

```
PRI Lines:
Make a selection
PhoneNumber     Protocol
B-ChannlGrp     DialPlanRtg
NumbrToSend     OutgoingTbl
Test TelNum     SwitchType
Exit
```

F2

▶ 4. Select Network Service.

```
B-Channel Groups:
Make a selection
B Channels IncomingRtg
Lines
NetworkServ
Copy Number
Exit
```

F3

▶ 5. Enter the B-channel group number (*nn = 1 to 80*).

```
B-Channel Groups:
Enter group number



Backspace
Exit            Enter
```

Dial or type [*nn*].

▶ 6. Save your entry.

Select **Enter**.

F10

Console Display/Instructions	Additional Information	PC
▶ **7. Specify a network service.**	● ◆ ■▲✪✶	
Network Services: Make a selection AT&T Toll DMS-100Local 5ESS Local Legend UDP MCI Toll Misc Exit	If you select AT&T Toll, go to ● AT&T Toll Procedure. If you select 5ESS Local, go to ◆ 5ESS Local Procedure. If you select MCI Toll, go to ■ MCI Toll Procedure. If you select Misc, go to ▲ Miscellaneous Procedure. If you select DMS-100Local, go to ✪ DMS-100 Local Procedure. If you select Legend UDP, go to ✶ LEGEND UDP Procedure.	F1 F2 F3 F4 F6 F7

● AT&T Toll Procedure

Console Display/Instructions	Additional Information	PC
▶ **1. Specify a service.**		
B-Channel Group *xx*: Select one MegacomWATS MULTIQUEST ACCUNET SDS LongDistnce SoftDefNetw Megacom 800 Exit Enter	*xx* = number entered in Step 5 Press the button or function key next to your selection.	
▶ **2. Save your entry.**		
Select Enter.		F10
▶ **3. Repeat Step 5 through 7 of the main procedure for each toll group number.**		
▶ **4. Return to the System Programming menu.**		
Select Exit four times.		F5 F5 F5 F5

◆ 5ESS Local Procedure

Console Display/Instructions	Additional Information	PC
▶ 1. Specify a 5ESS local service.		
B-Channel Group xx : Select One OUTWATS 56/64 Digtl VirtPrivNet INWATS Next Exit Enter	*xx* = number entered in Step 5	
	Select OUTWATS,	F1
	56/64 Digtl,	F2
	VirtPrivNet, or	F3
	INWATS.	F4
▶ 2. Save your entry.		
Select Enter.		F10
▶ 3. Repeat Steps 5 through 7 of the main procedure for each local group number.		
▶ 4. Return to the System Programming menu.		
Select Exit four times.		F5 F5 F5 F5

■ MCI Toll Procedure

Console Display/Instructions	Additional Information	PC
▶ 1. Specify an MCI Toll service.		
B-Channel Group xx: Select One MCI PRISM MCI VNET MCI 800 MCI 900 Next Exit Enter	*xx* = number entered in Step 5	
	Press the button or function key next to your selection.	
▶ 2. Continue to specify MCI Toll service for another B-channel group or go to Step 3.		
Select Next.		F9
	Return to Step 1. The next B-channel group number is displayed on Line 1.	

Console Display/Instructions	Additional Information	PC

▶ 3. Save your entry.

Select Enter. F10

▶ 4. Return to the System Programming menu.

Select Exit four times. F5 F5 F5 F5

▲ Miscellaneous Procedure

Console Display/Instructions	Additional Information	PC

▶ 1. Specify a service.

```
B-Channel Group xx:
Select one
Other
CallByCall

Exit          Enter
```

xx = number entered in Step 5

If you select CallByCall, you have finished this procedure. Go to Step 7.

Select Other or F1
CallByCall. F2

▶ 2. Save your entry.

Select Enter. F10

▶ 3. Erase the current network service code.

```
B-Channel Group xx:
Enter Network Service
(5 digit code of 0,1)
nnnnn

Backspace
Exit          Enter
```

xx = group number entered in Step 5

Select **Drop.** Alt+P

▶ 4. Enter the 5-digit network code that corresponds to the selected service.

Dial or type [nnnnn]. ←

▶ 5. Save your entry.

Select Enter. F10

Console Display/Instructions **Additional Information** **PC**

▶ **6. Repeat Steps 5 through 7 of the main procedure for each miscellaneous service group number.**

▶ **7. Return to the System Programming menu.**

Select Exit four times. F5 F5 F5 F5

✪ DMS-100 Local Procedure

Console Display/Instructions **Additional Information** **PC**

▶ **1. Specify a DMS-100 local service.**

```
B-Channel Group xx:
Select One
DMS-Private      DMS-TieTrk
DMS-INWATS
DMS-OUTWATS
DMS-FX
Exit             Enter
```

xx = number entered in Step 5

Press the button or function key next to your selection.

▶ **2. Continue to specify DMS-100 local service for another B-channel group or go to Step 3.**

Select Next. F9

Return to Step 1. The next B-channel group number is displayed on Line 1.

✶ LEGEND UDP Procedure

Console Display/Instructions **Additional Information** **PC**

▶ **1. The LEGEND UDP service is already specified for you.**

```
B-Channel Group xx:
Select One
ElecTandNtwk



Exit             Enter
```

xx = number entered in Step 5, main procedure.

Select ElecTandNtwk. F1

▶ **2. Return to the System Programming menu.**

Select Exit four times. F5 F5 F5 F5

Copy Telephone Number to Send

Use this procedure to indicate whether or not the telephone number to send to the network (for calls going out over ISDN lines assigned to a B-channel group) is copied from the number assigned to that channel.

NOTE:
In Release 6.0 and later systems (Hybrid/PBX mode only), setting the switch type to Legend-PBX or Legend-Ntwk automatically assigns Copy Number as the option for the single B-channel group associated with PRI tandem trunk that you specified in the Switch Type setting. As long as the switch type for the slot is set this way, you cannot change the Copy programming. For more information about switch types, see "Switch Type" on page 3–184.

Select `Do Not Copy Phone Number` either when a telephone number to send is assigned to each channel in the B-channel group or when no telephone number is to be sent to the network. In the latter case, make sure that no telephone numbers are assigned to any channels in the B-channel group by using the "Telephone Number to Send" procedure.

Summary: Copy Telephone Number to Send

Programmable by	System Manager
Mode	Hybrid/PBX, Key
Idle Condition	Not required
Planning Form	Form 3b, Incoming Trunks: DS1 Connectivity (100D Module)
Factory Setting	Do Not Copy
Valid Entries	Do Not Copy, Copy
Inspect	No
Copy Option	No
Console Procedure	`LinesTrunks`→`PRI`→`B ChannlGrp`→`Copy Number`→ Dial group no.→`Enter`→Specify copy or no copy→ `Enter`→`Exit`→`Exit`→`Exit`
PC Procedure	[F4]→[F6]→[F2]→[F4]→Type group no.→[F10]→ Specify copy or no copy→[F10]→[F5]→[F5]→[F5]

Procedure: Copy Telephone Number to Send

Console Display/Instructions **Additional Information** **PC**

▶ 1. Select the Lines and Trunks menu.

```
System Programming:      >
Make a selection
System          Extensions
SysRenumber     Options
Operator        Tables
LinesTrunks     AuxEquip
Exit            NightSrvce
```

F4

▶ 2. Select PRI.

```
Lines and Trunks:        >
Make a selection
LS/GS/DSL       PRI
TIE Lines       Copy
TT/LS Disc      RemoteAccss
DID             Pools
Exit            Toll Type
```

F6

▶ 3. Select B-Channel Groups.

```
PRI Lines:
Make a selection
PhoneNumber     Protocol
B-ChannlGrp     DialPlanRtg
NumbrToSend     OutgoingTbl
Test TelNum     SwitchType
Exit
```

F2

▶ 4. Select Copy Number.

```
B-Channel Groups:
Make a selection
B Channels  IncomingRtg
Lines
NetworkServ
Copy Number
Exit
```

F4

Console Display/Instructions **Additional Information** **PC**

▶ 5. Enter the B-channel group number (*nn* = 1 to 80).

```
B-Channel Groups:
Enter group number



Backspace
Exit            Enter
```

Dial or type [*nn*].

▶ 6. Save your entry.

Select Enter. F10

▶ 7. Specify whether or not the telephone number assigned to the channel is copied as the number to send to the network.

```
B-Channel Group xx:
Select one
Copy PhnNum to NumToSend
Do not Copy Phone Number

                Next
Exit            Enter
```

xx = number entered in Step 5

Select Copy PhnNum to NumToSend or F1
Do not Copy Phone Number. F2

▶ 8. Continue to assign the copy option to another B-channel group or go to Step 9.

Select Next. F9

Return to Step 7. The next group is displayed on Line 1.

▶ 9. Save your entry.

Select Enter. F10

▶ 10. Return to the System Programming menu.

Select Exit three times. F5 F5 F5

Incoming Routing

Use this procedure to specify whether incoming routing is either by line appearance or according to dial plan. Dial Plan Routing is available in Hybrid/PBX mode only.

In Release 6.0 and later systems, the Incoming Routing screen displays an option, Route Directly to UDP (Uniform Dial Plan). In Release 6.0 and later systems, setting the switch type to Legend-PBX or Legend-NTWK automatically assigns Route Directly to UDP as the Incoming Routing option for the single B-channel group associated with the Switch Type setting. As long as the switch type for the slot of the PRI tandem trunk is set this way, you cannot change the incoming routing for the group. This routing option cannot be selected for any other switch type. For more information about switch types, see "Switch Type" on page 3–184.

Summary: Incoming Routing

Programmable by	System Manager
Mode	Line appearance: Hybrid/PBX, Key; Dial Plan Routing or Route Directly to UDP: Hybrid/PBX only
Idle Condition	Not required
Planning Form	Form 3b, Incoming Trunks: DS1 Connectivity (100D module)
Factory Setting	Line appearance
Valid Entries	Dial Plan Routing, Routing by Line Appearance, Route Directly to UDP
Inspect	No
Copy Option	No
Console Procedure	`LinesTrunks`→`PRI`→`B-ChannlGrp`→`Incoming Rtg`→ Dial B-channel group no.→`Enter`→Specify routing method→`Enter`→`Exit`→`Exit`→`Exit`
PC Procedure	[F4]→[F6]→[F2]→[F6]→Type B-channel group no.→[F10]→Specify routing method→ [F10]→[F5]→[F5]→[F5]

Procedure: Incoming Routing

Console Display/Instructions	Additional Information	PC

1. Select the Lines and Trunks menu.

```
System Programming:      >
Make a selection
System          Extensions
SysRenumber     Options
Operator        Tables
LinesTrunks     AuxEquip
Exit            NightSrvce
```

F4

2. Select PRI.

```
Lines and Trunks:        >
Make a selection
LS/GS/DSL       PRI
TIE Lines       Copy
TT/LS Disc      RemoteAccss
DID             Pools
Exit            Toll Type
```

F6

3. Select B-Channel Groups.

```
PRI Lines:
Make a selection
PhoneNumber     Protocol
B-ChannlGrp     DialPlanRtg
NumbrToSend     OutgoingTbl
Test TelNum     SwitchType
Exit
```

F2

4. Select Incoming Routing.

```
B-Channel Groups:
Make a selection
B Channels      IncomingRtg
Lines
NetworkServ
Copy Number
Exit
```

F6

Console Display/Instructions	Additional Information	PC

▶ 5. Enter the B-channel group number (*nn = 1 to 80*).

```
PRI Incoming Routing:
Enter group number



Backspace
Exit            Enter
```

Dial or type [*nn*].

▶ 6. Save your entry.

Select Enter. F10

▶ 7. Specify the routing method to use for incoming calls.

```
B-Channel Group xx:
Select one
Routing by Dial Plan
Route by Line Appearance
Route Directly to UDP
                Next
Exit            Enter
```

xx = group number entered in Step 5

Select Routing by Dial Plan, F1
Route by Line Appearance, or F2
Route Directly to UDP. F3

▶ 8. Continue to assign the routing method to another B-channel group or go to Step 9.

Select Next. F9

Return to Step 7. The next group is displayed on Line 1.

▶ 9. Save your entry.

Select Enter. F10

▶ 10. Return to the System Programming menu.

Select Exit three times. F5 F5 F5

Telephone Number to Send

Use this procedure to assign the telephone number to send to the network when outgoing calls are made on an ISDN line. If the person being called subscribes to an automatic number identification service, the number indicates who is calling.

The number assigned to each channel does not have to be unique because it is not used for routing.

The telephone number sent to the network can be the one of the following:

- The extension number assigned to the calling telephone (Select `Extension Only` in Step 4)
- The extension number substituted into the lower order digits of a systemwide base number (Select `Base Number with Ext` in Step 4)
- The facility-based line telephone number (Select `Line Telephone Number` in Step 4)

NOTE:
Only one base number is supported per system. In systems having non-uniform extension numbers, for example, where there are some 3-digit extension numbers and some 4-digit extension numbers, one base number may not be sufficient to represent all the outside telephone numbers of all extensions.

Summary: Telephone Number to Send

Programmable by	System Manager
Mode	All
Idle Condition	Not required
Planning Form	Form 3b, Incoming Trunks: DS1 Connectivity (100D module)
Factory Setting	No digits are assigned
Valid Entries	Up to 12 digits (any combination of 0 to 9)
Inspect	No
Copy Option	No
Console Procedure	`LinesTrunks`→`PRI`→`NumbrToSend`→Specify type of no.→ `Enter`→**Drop**→Dial base no.→`Enter`→Dial line no.→ `Enter`→**Drop**→Dial telephone no.→`Enter`→`Exit`→`Exit`
PC Procedure	[F4]→[F6]→[F3]→Specify type of no.→[F10]→[Alt] + [P]→ Type base no.→[F10]→[Alt] + [P]→Type telephone no.→ [F10]→[F5]→[F5]

Procedure: Telephone Number to Send

Console Display/Instructions **Additional Information** **PC**

▶ 1. Select the Lines and Trunks menu.

```
System Programming:      >
Make a selection
System          Extensions
SysRenumber     Options
Operator        Tables
LinesTrunks     AuxEquip
Exit            NightSrvce
```

F4

▶ 2. Select PRI.

```
Lines and Trunks:        >
Make a selection
LS/GS/DSL       PRI
TIE Lines       Copy
TT/LS Disc      RemoteAccss
DID             Pools
Exit            Toll Type
```

F6

▶ 3. Select Number to Send.

```
PRI Lines:
Make a selection
PhoneNumber     Protocol
B-ChannlGrp     DialPlanRtg
NumbrToSend     OutgoingTbl
Test TelNum     SwitchType
Exit
```

F3

▶ 4. Specify the type of number to send. ● ◆

```
Phone Number to Send:
Make a selection
(for entire system)
Extension Only
Base Number with Ext.
Line Telephone Number
Exit            Enter
```

If you select Extension Only, continue with Step 5. F1

If you select Base Number with Ext., go to ● Base Number with Extension Procedure. F2

If you select Line Telephone Number, go to ◆ Line Telephone Number Procedure. F3

● Base Number with Extension Procedure

Console Display/Instructions	Additional Information	PC
▶ **1. Erase the current base number (*N*).**		
Base Number with Ext.: Enter max of 12 digit base telephone number *N* Backspace Exit Enter	Press **Drop**.	Alt + P
▶ **2. Enter a base telephone number of up to 12 digits (*N* = any combination of 0 to 9).**		
Dial or type [*N*].		
▶ **3. Save your entry.**		
Select Enter.		F10
▶ **4. Return to the System Programming menu.**		
Select Exit twice.		F5 F5

● Line Telephone Number Procedure

Console Display/Instructions	Additional Information	PC
▶ **1. Enter the line number (*nnn*).**		
Phone Number to Send: Enter line number Backspace Exit Enter	Dial or type [*nnn*].	
▶ **2. Save your entry.**		
Select Enter.		F10
▶ **3. Erase the current telephone number (*n*).**		
Line *xxx*: Enter phone number to send on outgoing calls N Backspace Next Exit Enter	*xxx* = line entered in Step 1 Press **Drop**.	Alt + P
▶ **4. Enter a telephone number of up to 12 digits to send (*N* = any combination of 0 to 9).**		
Dial or type [*N*].		
▶ **5. Continue to assign the telephone number to another line or go to Step 6.**		
Select Next.		F9
	Return to Step 3. The next line is displayed on Line 1.	
▶ **6. Save your entry.**		
Select Enter.		F10
▶ **7. Return to the System Programming menu.**		
Select Exit twice.		F5 F5

Test Telephone Number

Use this procedure to assign a test line or trunk telephone number for each 100D module installed in the control unit.

The number assigned to the test line/trunk must be different from the numbers assigned to other channels in the same B-channel group. It must be identical to the number provided by the PRI service provider.

Summary: Test Telephone Number

Programmable by	System Manager
Mode	Hybrid/PBX, Key
Idle Condition	Not required
Planning Form	Form 3b, Incoming Trunks: DS1 Connectivity (100D module)
Factory Setting	Not applicable
Valid Entries	Telephone number of up to 12 digits
Inspect	No
Copy Option	No
Console Procedure	LinesTrunks→PRI→Test TelNum→Dial slot no.→ Enter→**Drop**→Dial telephone no.→Enter→Exit→Exit
PC Procedure	[F4]→[F6]→[F4]→Type slot no.→[F10]→[Alt] + [P]→ Type telephone no.→[F10]→[F5]→[F5]

Procedure: Test Telephone Number

Console Display/Instructions	Additional Information	PC
▶ **1. Select the Lines and Trunks menu.**		
System Programming: > Make a selection System Extensions SysRenumber Options Operator Tables LinesTrunks AuxEquip Exit NightSrvce		[F4]

Console Display/Instructions **Additional Information** **PC**

▶ 2. Select PRI.

```
Lines and Trunks:        >
Make a selection
LS/GS/DSL       PRI
TIE Lines       Copy
TT/LS Disc      RemoteAccss
DID             Pools
Exit            Toll Type
```

F6

▶ 3. Select Test Telephone Number.

```
PRI Lines:
Make a selection
PhoneNumber     Protocol
B-ChannlGrp     DialPlanRtg
NumbrToSend     OutgoingTbl
Test TelNum     SwitchType
Exit
```

F4

▶ 4. Enter the slot number in the control unit that contains the 100D module (*nn* = 1 to 17).

```
PRI Test Telephone Num:
Enter slot number (1-17)



Backspace
Exit            Enter
```

Dial or type [*nn*].

▶ 5. Save your entry.

Select Enter.

F10

Console Display/Instructions	Additional Information	PC
▶ **6. Erase the current test telephone number (*N*).**		

`Slot xx Test Tel Number:`
`Enter test number`
`N`
 	
`Backspace  Next`
`Exit  Enter`
	xx = number entered in Step 4	

	Press **Drop**.	Alt + P
▶ **7. Enter a telephone number of up to 12 digits to be assigned as the test number to the 100D module (*N* = any combination of 0 to 9).**		
Dial or type [*N*].		⇦
▶ **8. Continue to assign the test telephone number to another 100D module or go to Step 9.**		
Select `Next`.		F9
	Return to Step 6. The next slot is displayed on Line 1.	
▶ **9. Save your entry.**		
Select `Enter`.		F10
▶ **10. Return to the System Programming menu.**		
Select `Exit` twice.		F5 F5

Timers and Counters

Use this procedure to set timer and counter thresholds.

CAUTION:
The factory settings for these thresholds are standard and rarely need to be changed. If you are not sure of the correct timer and threshold settings for your PRI lines and trunks, check with your Lucent Technologies representative before you make a change. Incorrect settings can cause your PRI lines and trunks to malfunction.

If the network does not respond before the programmed time or count, the system takes the appropriate corrective action.

The timers and counters are listed below.

- **T200 Timer.** Times the delay in the link layer acknowledgment of a message sent from the system to the network over a D-channel.
- **T203 Timer.** Times the interval between each exchange of messages between the system and the network on the D-channel.
- **N200 Counter.** Counts the number of times the system has transmitted a message on a D-channel because no link layer acknowledgment is received from the network.
- **N201 Counter.** Counts the maximum number of layer three octets the system can send or receive in a single D-channel message.
- **K Counter.** Counts the number of layer three unacknowledged messages sent from the system to the network on a D-channel.
- **T303 Timer.** Times the delay in network response when the system sends a setup message to initiate an outgoing call.
- **T305 Timer.** Times the delay in network response when the system sends a disconnect message to clear a call.
- **T308 Timer.** Times the delay in network response when the system sends a release message to clear a call.
- **T309 Timer.** Times the duration of a D-channel data link failure (a loss of signaling for the entire PRI connection).
- **T310 Timer.** Times the network delay following the receipt of a call preceding message on an outgoing call.
- **T313 Timer.** Times the delay in network response when the system sends a connect message that indicates the completion of an incoming call.
- **T316 Timer.** Times the delay in network response when the system sends a restart message to clear a B-channel.

NOTE:
If you enter an invalid timer value, the number you enter is truncated to the closest valid value. For example, if you enter 45 for a counter that ranges from 0 to 30, 4 is recorded as the counter value.

Table 3–3 shows the factory setting for each timer and counter and the valid range for each threshold.

Summary: Timers and Counters

Programmable by.	System Manager
Mode.	All
Idle Condition.	Not required
Planning Form.	Form 3b, Incoming Trunks: DS1 Connectivity (100D module)
Factory Setting	See Table 3–3
Valid Entries	See Table 3–3
Inspect	No
Copy Option	No
Console Procedure	`LinesTrunks`→`PRI`→`Protocol`→`Timers`→Dial slot no.→`Enter`→Select timer/counter→**Drop**→Dial no. of ms/octets/ and so on→`Enter`→`Exit`→`Exit`→`Exit`→`Exit`
PC Procedure	[F4]→[F6]→[F6]→[F1]→Type slot no.→[F10]→Select timer/ counter→[Alt] + [P]→Type no. of ms/octets/and so on→ [F10]→[F5]→[F5]→[F5]→[F5]

Table 3–3. Timers and Counters

Timer/Counter	Purpose	Factory Setting	Valid Range
T200 Timer	Maximum response time	1 second	1,000 to 3,000 ms
T203 Timer	Maximum time	30 seconds	1 to 60 seconds
N200 Counter	Maximum transmissions	3 transmissions	1 to 5 transmissions
N201 Counter	Maximum octets	260 octets	16 to 260 octets
K Counter	Maximum outstanding I-frames	7 frames	1 to 15 frames
T303 Timer	Set up timeout	4 seconds	4 to 12 seconds
T305 Timer	Disconnect timeout	4 seconds	4 to 30 seconds
T308 Timer	Release timeout	4 seconds	4 to 12 seconds
T309 Timer	Signal loss	90 seconds	30 to 120 seconds
T310 Timer	Call Proc. timeout	60 seconds	2 to 120 seconds
T313 Timer	Connect timeout	4 seconds	4 to 60 seconds
T316 Timer	Restart timeout	120 seconds	30 to 120 seconds

Procedure: Timers and Counters

Console Display/Instructions	Additional Information	PC

▶ 1. Select the Lines and Trunks menu.

```
System Programming:      >
Make a selection
System          Extensions
SysRenumber     Options
Operator        Tables
LinesTrunks     AuxEquip
Exit            NightSrvce
```

F4

▶ 2. Select PRI.

```
Lines and Trunks:        >
Make a selection
LS/GS/DSL       PRI
TIE Lines       Copy
TT/LS Disc      RemoteAccss
DID             Pools
Exit            Toll Type
```

F6

▶ 3. Select Protocol.

```
PRI Lines:
Make a selection
PhoneNumber     Protocol
B-ChannlGrp     DialPlanRtg
NumbrToSend     OutgoingTbl
Test TelNum     SwitchType
Exit
```

F6

▶ 4. Select Timers.

```
PRI Protocol Options:
Make a selection
Timers
TEI


Exit
```

F1

Console Display/Instructions	Additional Information	PC
▶ **5. Enter the number of the slot in the control unit that contains the 100D module (*nn* = 1 to 17).**		
PRI Timers: Enter slot number (1-17) Backspace Exit Enter	Dial or type [*nn*].	
▶ **6. Save your entry.**		
Select Enter.		F10
▶ **7. Select the timer/counter to change.**		
Slot *xx* PRI Settings: > Make a selection T200 Timer K Counter T203 Timer T303 Timer N200Counter T305 Timer N201Counter T308 Timer Exit T309 Timer	*xx* = number entered in Step 5 To select other timers, press **More** to go to the second PRI Settings screen.	PgDn
Slot *xx* PRI Settings: Make a selection T310 Timer T313 Timer T316 Timer Exit	Press the button or function key next to your selection.	

Console Display/Instructions	Additional Information	PC
▶ 8. Erase the current setting.		
(Display depends on timer/counter selected). Backspace Next Exit Enter	Press **Drop**.	Alt + P
▶ 9. Enter the new setting (see Table 3–3).		
Dial or type [*nnnn*].		
▶ 10. Continue to assign the setting to another slot or go to Step 11.		
Select Next.		F9
	Return to Step 8. The next slot is displayed on Line 1.	
▶ 11. Save your entry.		
Select Enter.		F10
▶ 12. Return to the System Programming menu.		
Select Exit four times.		F5 F5 F5 F5

Terminal Equipment Identifier

Use this procedure to assign the link layer address of a piece of equipment connected to each D-channel. Normally, only one piece is connected and the system assumes that the Terminal Equipment Identifier (TEI) is 0.

CAUTION:
The value of the TEI rarely has to be changed. Check with your Lucent Technologies representative before changing this value.

Summary: Terminal Equipment Identifier

Programmable by	System Manager
Mode	All
Idle Condition	Not required
Planning Form	Form 3b, Incoming Trunks: DS1 Connectivity (100D module)
Factory Setting	0
Valid Entries	0 to 63
Inspect	No
Copy Option	No
Console Procedure	LinesTrunks→PRI→Protocol→TEI→Dial slot no.→ Enter→**Drop**→Dial new ID no.→Enter→Exit→ Exit→Exit
PC Procedure	F4→F6→F6→F2→Type slot no.→F10→Alt + P→ Type new ID no.→F10→F5→F5→F5

Procedure: Terminal Equipment Identifier

Console Display/Instructions	Additional Information	PC
1. Select the Lines and Trunks menu.		

```
System Programming:      >
Make a selection
System          Extensions
SysRenumber     Options
Operator        Tables
LinesTrunks     AuxEquip
Exit            NightSrvce
```

F4

Console Display/Instructions	Additional Information	PC

▶ 2. Select PRI.

```
Lines and Trunks:        >
Make a selection
LS/GS/DSL        PRI
TIE Lines        Copy
TT/LS Disc       RemoteAccss
DID              Pools
Exit             Toll Type
```

F6

▶ 3. Select Protocol.

```
PRI Lines:
Make a selection
PhoneNumber      Protocol
B-ChannlGrp      DialPlanRtg
NumbrToSend      OutgoingTbl
Test TelNum      SwitchType
Exit
```

F6

▶ 4. Select TEI.

```
PRI Protocol Options:
Make a selection
Timers
TEI



Exit
```

F2

▶ 5. Enter the number of the slot in the control unit that contains the 100D module (*nn* = 1 to 17).

```
PRI TEI:
Enter slot number (1-17)



Backspace
Exit             Enter
```

Dial or type [*nn*].

Console Display/Instructions	Additional Information	PC
▶ **6. Save your entry.**		
Select Enter.		F10
▶ **7. Erase the current identification number (*nn*).**		
Slot *xx* TEI: Enter terminal equipment id number (0-63) *nn* Backspace Next Exit Enter	*xx* = number entered in Step 5	
	Press **Drop**.	Alt+P
▶ **8. Enter the new identification number (*n* = 0 to 63).**		
Dial or type [*nn*].		⇦
▶ **9. Continue to assign the identification number to another slot or go to Step 10.**		
Select Next.		F9
	Return to Step 7. The next slot is displayed on Line 1.	
▶ **10. Save your entry.**		
Select Enter.		F10
▶ **11. Return to the System Programming menu.**		
Select Exit three times.		F5 F5 F5

Dial Plan Routing

Dial plan routing provides a way to route incoming calls on a “per B-channel group” basis. An incoming call is routed by matching the incoming number (by service, number of digits, and pattern) and then optionally deleting and/or adding digits to direct the call to a specific endpoint. A service must be specified; the number of digits and pattern are optional. For example, you can specify that calls received from a particular area code should be routed to the specific individual or group responsible for accounts in that area.

Dial plan routing is available in Hybrid/PBX mode only. Key systems route incoming calls on a per-line basis.

In Release 4.2 and later, you can specify the following additional services:

- MCI Toll Services available for a DMS-250 or DEX600E switch type:
  - MCI PRISM
  - MCI Vnet
  - MCI 800
  - MCI 900
- Local exchange carrier services available for a DMS-100 switch type:
  - DMS Private
  - DMS INWATS
  - DMS OUTWATS
  - DMS FX (foreign exchange)
  - DMS Tie Trunk

NOTES:

1. You can enter a service not shown on the Network Service screen by using the 5-digit binary code that represents the service in the Network Facilities Information Element of ISDN PRI layer 3 signaling protocol. Contact your service provider for more information about the codes and see “Miscellaneous Procedure” within the following procedure.
2. Dial plan routing does not affect PRI tandem trunks connected to slots with switch types of LEGEND-Network or LEGEND-PBX. See “Switch Type” on page 3–184 for details.
3. You must program a service before you program any other Dial Plan Routing function. If you have not programmed a service, complete the procedure below for the `Service` option and then repeat the procedure for each optional function that you want to program.

Summary: Dial Plan Routing

Programmable by.	System Manager
Mode	Hybrid/PBX
Idle Condition	Not required
Planning Form	Form 3b, Incoming Trunks: DS1 Connectivity (100D module)
Factory Setting	Service: empty; Patterns: blank; Total Digits: 0; Delete Digits: 0; Add Digits: 0
Valid Entries	Service: Toll, Local, Miscellaneous Entries: 0–15 Digits per Pattern: 0–8 Total Digits: 1–14 Delete Digits: 0–14, 0=wildcard Add Digits: 0–4 (valid digits: 0–9)
Inspect	No
Copy Option	No

Console Procedure	To specify Service:
	`LinesTrunks`→`PRI`→`DialPlanRtg`→`Service`→Dial entry no.→`Enter`→Select service→`Exit`→`Exit`→`Exit`
	
	To specify Patterns:
	`LinesTrunks`→`PRI`→`DialPlanRtg`→`Patterns`→ Dial entry no.→`Enter`→**Drop**→Dial pattern→ `Enter`→ `Exit`→`Exit`→`Exit`
	
	To specify Total Digits:
	`LinesTrunks`→`PRI`→`DialPlanRtg`→`Total Digits`→ Dial entry no.→`Enter`→**Drop**→Dial digits→ `Enter`→ `Exit`→`Exit`→`Exit`
	
	To specify Delete Digits:
	`LinesTrunks`→`PRI`→`DialPlanRtg`→`Delete Digits`→ Dial entry no.→`Enter`→**Drop**→Dial delete digits→ `Enter`→`Exit`→`Exit`→`Exit`
	
	To specify Add Digits:
	`LinesTrunks`→`PRI`→`DialPlanRtg`→`Add Digits`→ Dial entry no.→`Enter`→**Drop**→Dial add digits→ `Enter`→ `Exit`→`Exit`→`Exit`

PC Procedure	To specify Service: [F4]→[F6]→[F7]→[F2]→Type entry no.→[F10]→ Select service→[F10]→[F5]→[F5]→[F5] To specify Patterns: [F4]→[F6]→[F7]→[F2] Type entry no.→[F10]→[Alt] + [P]→ Type pattern→[F10]→[F5]→[F5]→[F5]

To specify Total Digits:
F4 → F6 → F7 → F3 Type entry no. → F10 → Alt + P →
Type digits → F10 → F5 → F5 → F5

To specify Delete Digits:
F4 → F6 → F7 → F4 Type entry no. → F10 → Alt + P →
Type delete digits → F10 → F5 → F5 → F5

To specify Add Digits:
F4 → F6 → F7 → F5 Type entry no. → F10 → Alt + P →
Type add digits → F10 → F5 → F5 → F5

Procedure: Dial Plan Routing

Console Display/Instructions	Additional Information	PC
1. Select the Lines and Trunks menu.		
System Programming: >		
Make a selection		
System Extensions		
SysRenumber Options		
Operator Tables		
LinesTrunks AuxEquip		
Exit NightSrvce		F4
2. Select PRI.		
Lines and Trunks: >		
Make a selection		
LS/GS/DSL PRI		
TIE Lines Copy		
TT/LS Disc RemoteAccss		
DID Pools		
Exit Toll Type		F6
3. Select Dial Plan Routing.		
PRI Lines:		
Make a selection		
PhoneNumber Protocol		
B-ChannlGrp DialPlanRtg		
NumbrToSend OutgoingTbl		
Test TelNum SwitchType		
Exit		F7

Console Display/Instructions	Additional Information	PC
▶ **4. Select Service.** ❍ ❖ ■ ▲		
PRI Dial Plan Routing: Make a selection Service Add Digits Patterns TotalDigits DeleteDigit Exit	Service must be programmed. Continue with Step 5. Then program other options.	F1
	❍ If you select Patterns, go to Patterns Procedure.	F2
	❖ If you select TotalDigits, go to Total Digits Procedure.	F3
	■ If you select DeleteDigit, go to Delete Digits Procedure.	F4
	▲ If you select Add Digits, go to Add Digits Procedure.	F6
	Press the button or function key next to your selection.	
▶ **5. Enter the entry number (*nn* = 0 to 15).**		
DialPlanRouting Service: Enter entry number (0-15) Backspace Exit Enter	Dial or type [*nn*].	
▶ **6. Save your entry.**		
Select Enter.		F10
▶ **7. Select a service.**	✚ ✕ ✶ ● ◆	
DialPlanRouting Service: Make a selection AT&T Toll DMS-100Local 5ESS Local MCI Toll Misc Exit	If you select AT&T Toll, go to ✚ AT&T Toll Procedure.	F1
	If you select 5ESS Local, go to ✕ Local Procedure.	F2
	If you select MCI Toll, go to ✶ MCI Toll Procedure.	F3
	If you select Misc, go to ● Miscellaneous Procedure.	F4
	If you select DMS-100 Local, go to ◆ DMS-100 Local Procedure.	F6

✚ AT&T Toll Procedure

Console Display/Instructions	Additional Information	PC

▶ 1. Select an AT&T service for the B-channel group.

```
Dial Plan Rtg Entry xx:
Select one
Megacom 800      MegacomWATS
ACCUNET SDS      LongDistnce
SoftDefNetw
MULTIQUEST       Next
Exit             Enter
```

xx = number entered in Step 5

Press the button or function key next to your selection.

▶ 2. Continue to assign the service to another routing entry or go to Step 3.

Select Next. F9

Return to Step 1. The next dial plan routing entry is displayed on Line 1.

▶ 3. Save your entry.

Select Enter. F10

▶ 4. Program additional options by returning to Step 4 of the main procedure or go to Step 5.

▶ 5. Return to the System Programming menu.

Select Exit three times. F5 F5 F5

X Local Procedure

Console Display/Instructions	Additional Information	PC
▶ 1. Select a service for the B-channel group.		
Dial Plan Rtg Entry *xx*: Select One INWATS 56/64 Digtl VirtPrivNet OUTWATS Next Exit Enter	*xx* = number entered in Step 5	
	Press the button or function key next to your selection.	
▶ 2. Continue to assign the service to another routing entry or go to Step 3.		
Select Next.		F9
	Return to Step 1. The next dial plan routing entry is displayed on Line 1.	
▶ 3. Save your entry.		
Select Enter.		F10
▶ 4. Program additional options by returning to Step 4 of the main procedure or go to Step 5.		
▶ 5. Return to the System Programming menu.		
Select Exit three times.		F5 F5 F5

✶ MCI Toll Procedure

Console Display/Instructions	Additional Information	PC
▶ 1. Select a miscellaneous service.		
Dial Plan Rtg Entry *xx*: Select one MCI PRISM MCI VNET MCI 800 MCI 900 Next Exit Enter	*xx* = number entered in Step 5	
	Select MCI PRISM,	F1
	MCI VNET,	F2
	MCI 800, or	F3
	MCI 900	F4
▶ 2. Continue to assign the service to another routing entry or go to Step 3.		
Select Next.		F9
	Return to Step 1. The next dial plan routing entry is displayed on Line 1.	
▶ 3. Save your entry.		
Select Enter.		F10
▶ 4. Program additional options by returning to Step 4 of the main procedure or go to Step 5.		
▶ 5. Return to the System Programming menu.		
Select Exit three times.		F5 F5 F5

● Miscellaneous Procedure

Console Display/Instructions	Additional Information	PC
▶ 1. Select a miscellaneous service.		
Dial Plan Rtg Entry *xx*: Select one Other Any Service No Service Next Exit Enter	*xx* = number entered in Step 5	
	Select Other,	F1
	Any Service, or	F2
	No Service.	F3
▶ 2. Continue to assign the service to another routing entry or go to Step 3.		
Select Next		F9
	Return to Step 1. The next dial plan routing entry is displayed on Line 1.	
▶ 3. Save your entry.		
Select Enter.		F10
▶ 4. Erase the current network service (*nnnnn*).		
Dial Plan Rtg Entry *xx*: Enter Network Service (5 digit code of 0,1) *nnnnn* Backspace Exit Enter	*xx* = number entered in Step 5	
	Select **Drop**.	Alt + P
▶ 5. Enter the 5-digit code that corresponds to the service selected.		
Dial or type [*nnnnn*].		↵
▶ 6. Continue to assign the code to another routing entry or go to Step 7.		
Select Next.		F9
	Return to Step 4. The next dial plan routing entry is displayed on Line 1.	

Console Display/Instructions **Additional Information** **PC**

▶ **7. Save your entry.**

Select Enter. F10

▶ **8. Program additional options by returning to Step 4 of the main procedure or go to Step 9.**

▶ **9. Return to the System Programming menu.**

Select Exit three times. F5 F5 F5

◆ **DMS-100 Local Procedure**

Console Display/Instructions **Additional Information** **PC**

▶ **1. Select a miscellaneous service.**

```
Dial Plan Rtg Entry xx:
Select one
DMS-Private      DMS-TieTrk
DMS-INWATS
DMS-OUTWATS
DMS-FX           Next
Exit             Enter
```

xx = number entered in Step 5

Select DMS-Private F1
DMS-INWATS F2
DMS-OUTWATS F3
DMS-FX, or F4
DMS-TieTrk F6

▶ **2. Continue to assign the service to another routing entry or go to Step 3.**

Select Next. F9

Return to Step 1. The next dial plan routing entry is displayed on Line 1.

▶ **3. Save your entry.**

Select Enter. F10

▶ **4. Program additional options by returning to Step 4 of the main procedure or go to Step 5.**

▶ **5. Return to the System Programming menu.**

Select Exit three times. F5 F5 F5

❍ Patterns Procedure

Console Display/Instructions	Additional Information	PC
▶ **1. Enter the entry number (*nn* = 0 to 15).**		
DialPlanRoutingPatterns: Enter entry no. (0-15) Backspace Exit Enter	Leave field blank to match any pattern.	
	Dial or type [*nn*].	
▶ **2. Save your entry.**		
Select Enter.		F10
▶ **3. Erase the current number of digits to match entry (*n*).**		
Dial Plan Rtg Entry *xx*: Enter digits to match *n* Backspace Next Exit Enter	*xx* = number entered in Step 1	
	Press **Drop**.	Alt + P
▶ **4. Enter the new number of digits to match (*n* = 0 to 8; use 0 to match any number of digits.).**		
Dial or type [*n*].		
▶ **5. Continue to assign the digits to another routing entry or go to Step 6.**		
Select Next.		F9
	Return to Step 3. The next dial plan routing entry is displayed on Line 1.	
▶ **6. Save your entry.**		
Select Enter.		F10

Console Display/Instructions **Additional Information** **PC**

▶ **7. Program additional options by returning to Step 4 of the main procedure or go to Step 8.**

▶ **8. Return to the System Programming menu.**

Select Exit three times. F5 F5 F5

❖ Total Digits Procedure

Console Display/Instructions **Additional Information** **PC**

▶ **1. Enter the entry number (*nn* = 0 to 15).**

```
DialPlanRtg TotalDigits:
Enter entry no. (0-15)



Backspace
Exit            Enter
```

Use 0 to match any number of digits.

Dial or type [*nn*].

▶ **2. Save your entry.**

Select Enter. F10

▶ **3. Erase the current number of total digits (*nn*).**

```
Dial Plan Rtg Entry xx:
Enter number of digits
in dialed number  (0-14)
nn

Backspace       Next
Exit            Enter
```

xx = number entered in Step 1

Press **Drop**. Alt + P

▶ **4. Enter the new total number of digits (*nn* = 0 to 14).**

Dial or type [*nn*].

Console Display/Instructions	Additional Information	PC
▶ **5. Continue to assign the digits to another routing entry or go to Step 6.**		
Select Next.		F9
	Return to Step 3. The next dial plan routing entry is displayed on Line 1.	
▶ **6. Save your entry.**		
Select Enter.		F10
▶ **7. Program additional options by returning to Step 4 of the main procedure or go to Step 8.**		
▶ **8. Return to the System Programming menu.**		
Select Exit three times.		F5 F5 F5

■ Delete Digit Procedure

Console Display/Instructions	Additional Information	PC
▶ **1. Enter the entry number (*nn* = 0 to 15).**		
DialPlanRtg DeleteDigits: Enter entry no. (0-15) Backspace Exit Enter	Dial or type [*nn*].	
▶ **2. Save your entry.**		
Select Enter.		F10

Console Display/Instructions	Additional Information	PC

▶ 3. Erase the current number of delete digits (*nn*).

```
Dial Plan Rtg Entry xx:
Enter number of digits
to delete  (0-14)
nn

Backspace        Next
Exit             Enter
```

xx = number entered in Step 1

Press **Drop**. Alt + P

▶ 4. Enter the new number of digits to delete (*n* = 0 to 14).

Dial or type [*nn*].

▶ 5. Continue to assign the delete digits to another routing entry or go to Step 6.

Select Next. F9

Return to Step 3. The next dial plan routing entry is displayed on Line 1.

▶ 6. Save your entry.

Select Enter. F10

▶ 7. Program additional options by returning to Step 4 of the main procedure or go to Step 8.

▶ 8. Return to the System Programming menu.

Select Exit three times. F5 F5 F5

▲ Add Digits Procedure

Console Display/Instructions	Additional Information	PC
▶ 1. Enter the entry number (*nn* = 0 to 15).		
DialPlanRtg AddDigits: Enter entry no. (0-15) Backspace Exit Enter	Dial or type [*nn*].	
▶ 2. Save your entry.		
Select Enter.		F10
▶ 3. Erase the current number of add digits (*nn*).		
Dial Plan Rtg Entry *xx*: Enter digits to add *nn* Backspace Next Exit Enter	*xx* = number entered in Step 1 Press **Drop.**	Alt+P
▶ 4. Enter the new number of digits to add (*nn*).		
Dial or type [*nn*].		
▶ 5. Continue to assign the add digits to another routing entry or go to Step 6.		
Select Next.		F9
	Return to Step 3. The next dial plan routing entry is displayed on Line 1.	
▶ 6. Save your entry.		
Select Enter.		F10
▶ 7. Program additional options by returning to Step 4 of the main procedure or go to Step 8.		
▶ 8. Return to the System Programming menu.		
Select Exit three times.		F5 F5 F5

Outgoing Tables

PRI provides tables that work in conjunction with personal lines, pools, and ARS tables to route calls. The following tables specify services for outgoing calls:

- **Call-by-Call.** Selects an outgoing service, based on routing digits and the bearer capability (voice, data, or both) of the calling extension. It allows a single group of B-channels to carry a variety of services, such as ACCUNET, SDN, and Megacom WATS.
- **Network Selection.** Selects a long-distance carrier. Calls that match Network Selection tables can be routed to a specific service by the Call-by-Call tables.
- **Special Services.** Selects services such as international dialing and operator assistance. Calls that match these tables are *not* routed by the Call-by-Call tables.

NOTES:

1. PRI tables that work with pools and ARS apply to Hybrid/PBX mode only.
2. In Release 6.0 and later systems, when the PRI switch type is set for Legend-PBX or Legend-NTWK to support a PRI tandem trunk, outgoing tables do not affect outgoing calls for the PRI facility connected to the slot specified by the Switch Type setting.

Network Selection Tables

Dialed prefixes for selecting long-distance carriers are matched to entries in the four Network Selection tables. Eight default tables are provided, specifying 10*** and 101****. The asterisks are wildcards that represent the various long-distance carrier codes. (10*** is the current U.S. standard for specifying long-distance carriers; 101**** is provided for future use.)

NOTES:

1. U.S. customers rarely need to program additional Network Selection tables because long-distance carrier codes match 10*** or 101****.
2. In Release 6.0 and later systems (Hybrid/PBX mode only), when routing private network trunks for ARS 10*** and 101**** (Interexchange or IXC) calls from a networked switch that is not connected to the public switched network and only has private trunks, the private network trunks must be assigned to the main pool on the switch where ARS is dialed. The ARS access code for the local and remote systems must be identical. The procedure described here does not affect these PRI tandem trunks.

Summary: Network Selection Tables

Programmable by	System Manager
Mode	Key and Hybrid/PBX
Idle Condition	Not required
Planning Form	Form 3b, Incoming Trunks: DS1Connectivity (100D module)
Factory Setting	Not applicable
Valid Entries	Prefix for long distance carrier
Inspect	No
Copy Option	No
Console Procedure	LinesTrunks→PRI→OutgoingTbl→NetwkSelect→ Dial entry no.→Enter→**Drop**→Dial prefix→Enter→ Exit→Exit→Exit
PC Procedure	[F4]→[F6]→[F8]→[F1]→Type entry no.→[F10]→[Alt] + [P]→ Type prefix→[F10]→[F5]→[F5]→[F5]

Procedure: Network Selection Tables

Console Display/Instructions **Additional Information** **PC**

▶ 1. Select the Lines and Trunks menu.

```
System Programming:        >
Make a selection
System          Extensions
SysRenumber     Options
Operator        Tables
LinesTrunks     AuxEquip
Exit            NightSrvce
```

[F4]

▶ 2. Select PRI.

```
Lines and Trunks:          >
Make a selection
LS/GS/DSL       PRI
TIE Lines       Copy
TT/LS Disc      RemoteAccss
DID             Pools
Exit            Toll Type
```

[F6]

Console Display/Instructions **Additional Information** **PC**

▶ 3. Select Outgoing Tables.

```
PRI Lines:
Make a selection
PhoneNumber     Protocol
B-ChannlGrp     DialPlanRtg
NumbrToSend     OutgoingTbl
Test TelNum     SwitchType
Exit
```

F8

▶ 4. Select Network Selection tables.

```
PRI Outgoing Tables:
Make a selection
NetwkSelect
SpecialServ
CBC Service

Exit
```

F1

▶ 5. Enter the table number (*n* = 0 to 3).

```
Network Selection Table:
Enter entry number (0-3)



Backspace
Exit            Enter
```

Dial or type [*n*].

▶ 6. Save your entry.

Select Enter.

F10

Console Display/Instructions	Additional Information	PC
▶ **7. Erase the current dial prefix (*n*).**		
Netwk SelectTbl Entry *x*: Enter dial prefix (use * for wild card) *n* Backspace Next Exit Enter	*x* = number entered in Step 5	
	Press **Drop**.	Alt + P
▶ **8. Enter the dial prefix.**		
Dial or type [n].		↵
▶ **9. Continue to assign the dial prefix to another table or go to Step 10.**		
Select Next.		F9
	Return to Step 7. The next table is displayed on Line 1.	
▶ **10. Save your entry.**		
Select Enter.		F10
▶ **11. Return to the System Programming menu.**		
Select Exit three times.		F5 F5 F5

Special Services Tables

Eight tables provide for international calling and for operator-assisted calls. Default tables include the special prefixes 0 and 00 for operator-assisted calls. Dialed numbers are matched against entries in these tables for patterns (011, 010, 01, 00, 0, and 1); for operator assistance (operator-assisted, presubscribed common carrier operator, and none); and for type of number (national or international). Up to four digits can be deleted.

Summary: Special Services Tables

Programmable by	System Manager
Mode	Key and Hybrid/PBX
Idle Condition	Not required
Planning Form	Form 3b, Incoming Trunks: DS1 Connectivity (100D module)
Factory Setting	See Table 3–4
Valid Entries	Prefix for international or operator-assisted calls
Inspect	No
Copy Option	No
Console Procedure	To specify Pattern: LinesTrunks→PRI→OutgoingTbl→SpecialServ→Pattern→Dial entry no.→Enter→**Drop**→Dial pattern→Enter→Exit→Exit→Exit→Exit To specify Operator: LinesTrunks→PRI→OutgoingTbl→SpecialServ→Operator→Dial entry no.→Enter→Select type of operator→Enter→Exit→Exit→Exit→Exit To specify Type of Number: LinesTrunks→PRI→OutgoingTbl→SpecialServ→TypeOfNumbr→Dial entry no.→Enter→Select type→Enter→Exit→Exit→Exit→Exit To specify Delete Digits: LinesTrunks→PRI→OutgoingTbl→SpecialServ→DeleteDigit→Dial entry no.→Enter→**Drop**→Dial pattern→Enter→Exit→Exit→Exit→Exit
PC Procedure	To specify Pattern: [F4]→[F6]→[F8]→[F2]→[F1]→Type entry no.→[F10]→[Alt] + [P]→Type pattern→[F10]→[F5]→[F5]→[F5]→[F5] To specify Operator: [F4]→[F6]→[F8]→[F2]→[F2]→Type entry no.→[F10]→Select type of operator→[F10]→[F5]→ [F5]→[F5]→[F5] To specify Type of Number: [F4]→[F6]→[F8]→[F2]→[F3]→Type entry no.→[F10]→Type number type→[F10]→[F5]→[F5]→[F5]→[F5] To specify Delete Digits: [F4]→[F6]→[F8]→[F2]→[F4]→Type entry no.→[F10]→[Alt] + [P]→Type digits to be deleted→ [F10]→[F5]→[F5]→[F5]→[F5]

Table 3–4. Special Services Table

Table	Pattern (up to 4 digits)	Operator	Delete Digits (0 to 4)
0	011	none	3
1	010	Local Operator	3
2	01	Local Operator	2
3	00	Local Operator/ Presubscribed Carrier	2
4	0	Local Operator	1
5	1	none	1

Procedure: Special Services Tables

Console Display/Instructions **Additional Information** **PC**

1. Select the Lines and Trunks menu.

```
System Programming:      >
Make a selection
System          Extensions
SysRenumber     Options
Operator        Tables
LinesTrunks     AuxEquip
Exit            NightSrvce
```

F4

2. Select PRI.

```
Lines and Trunks:        >
Make a selection
LS/GS/DSL       PRI
TIE Lines       Copy
TT/LS Disc      RemoteAccss
DID             Pools
Exit            Toll Type
```

F6

Console Display/Instructions	Additional Information	PC

▶ 3. Select Outgoing Tables.

```
PRI Lines:
Make a selection
PhoneNumber     Protocol
B-ChannlGrp     DialPlanRtg
NumbrToSend     OutgoingTbl
Test TelNum     SwitchType
Exit
```

F8

▶ 4. Select the Special Services tables.

```
PRI Outgoing Tables:
Make a selection
NetwkSelect
SpecialServ
CBC Service

Exit
```

F2

▶ 5. Select an option. ● ◆ ■ ▲

```
Special Services Table:
Make a selection
Pattern
Operator
TypeOfNumber
DeleteDigit
Exit
```

If you select Pattern, go to
● Pattern Procedure. F1

If you select Operator, go to
◆ Operator Procedure. F2

If you select TypeOfNumber, go to
■ Type Of Number Procedure. F3

If you select DeleteDigit, go to
▲ Delete Digits Procedure. F4

Press the button or function key next to your selection.

● Pattern Procedure

Console Display/Instructions	Additional Information	PC
▶ 1. Enter the table number (*n* = 0 to 7).		
Special Services Table: Enter entry number (0-7) Backspace Exit Enter	Dial or type [*n*].	
▶ 2. Save your entry.		
Select Enter.		F10
▶ 3. Erase the current pattern (*nnnn*).		
SpecialServ Tbl Entry *x*: Enter pattern *nnnn* Backspace Next Exit Enter	*x* = number entered in Step 1 Press **Drop**.	Alt + P
▶ 4. Enter the pattern to be matched.		
Dial or type [*nnnn*].		
▶ 5. Continue to assign the pattern to another table or go to Step 6.		
Select Next.		F9
	Return to Step 3. The next table is displayed on Line 1.	
▶ 6. Save your entry.		
Select Enter.		F10
▶ 7. Return to the System Programming menu.		
Select Exit four times.		F5 F5 F5 F5

◆ **Operator Procedure**

Console Display/Instructions	Additional Information	PC
▶ **1. Enter the table number (*n* = 0 to 7).**		
Special Services Table: Enter entry number (0-7) Backspace Exit Enter	Dial or type [*n*].	
▶ **2. Save your entry.**		
Select Enter.		F10
▶ **3. Specify the type of operator.**		
SpecialServ Tbl Entry *x*: Choose type of operator Local Operator Presubscribed Carrier No Operator Next Exit Enter	*x* = number entered in Step 1	
	Select Local Operator,	F1
	Presubscribed Carrier, or	F2
	No Operator.	F3
▶ **4. Continue to assign the operator type to another table or go to Step 5.**		
Select Next.		F9
	Return to Step 3. The next table is displayed on Line 1.	
▶ **5. Save your entry.**		
Select Enter.		F10
▶ **6. Return to the System Programming menu.**		
Select Exit four times.		F5 F5 F5 F5

■ Type Of Number Procedure

Console Display/Instructions	Additional Information	PC
▶ 1. Enter the table number (*n* = 0 to 7).		
Special Services Table: Enter entry number (0-7) Backspace Exit Enter	Dial or type [*n*].	
▶ 2. Save your entry.		
Select Enter.		F10
▶ 3. Specify the type of operator.		
SpecialServ Tbl Entry *x*: Choose type of number National International Next Exit Enter	*x* = number entered in Step 1 Select National or International.	F1 F2
▶ 4. Continue to assign the number type to another table or go to Step 5.		
Select Next.		F9
	Return to Step 3. The next table is displayed on Line 1.	
▶ 5. Save your entry.		
Select Enter.		F10
▶ 6. Return to the System Programming menu.		
Select Exit four times.		F5 F5 F5 F5

▲ Delete Digits Procedure

Console Display/Instructions	Additional Information	PC
▶ 1. Enter the table number (*n* = 0 to 7).		
Special Services Table: Enter entry number (0-7) Backspace Exit Enter	Dial or type [*n*].	
▶ 2. Save your entry.		
Select Enter.		F10
▶ 3. Erase the current number of digits (*n*).		
SpecialServ Tbl Entry *x*: Enter number of digits to delete (0-4) *n* Backspace Next Exit Enter	*x* = number entered in Step 1 Press **Drop**.	Alt+P
▶ 4. Enter the number of digits to be deleted (*n* = 0 to 4).		
Dial or type [*n*].		
▶ 5. Continue to assign the delete digits to another table or go to Step 6.		
Select Next.		F9
	Return to Step 3. The next table is displayed on Line 1.	
▶ 6. Save your entry.		
Select Enter.		F10
▶ 7. Return to the System Programming menu.		
Select Exit four times.		F5 F5 F5 F5

Call-by-Call Service Table

When a call is placed on a Call-by-Call B-channel group, a specific service is selected. The selected service depends on the match between the dialed digits and the table entries. A service must be specified; otherwise the entry is ignored.

The Call-by-Call table can contain up to 10 entries. Each entry can contain up to 10 patterns, each with a maximum of eight digits. If a dialed number matches two patterns, the longer pattern takes precedence. For example, 212555 matches both 212555 and 212, but the system will match the longer pattern. In addition to patterns, the Call-by-Call table can be used to specify from 0 through 8 digits to be deleted (the factory setting is 0).

If the last entry in the table is empty (that is, if no pattern is specified), this entry is used as a default and matches any pattern and type of call.

If ARS (Hybrid/PBX only) is used, ARS selects the route. If the route points to a Call-by-Call B-Channel group, Call-by-Call service selects the network service. ARS Call-by-Call service is integrated according to the specified bearer capability (voice, data, or both) for each feature. In addition, ARS digit deletion/addition may help specify the service selected by the Call-by-Call feature. See "Automatic Route Selection" on page 3–528 for more information.

Beginning with Release 4.2, the following additional services are available:

- MCI Toll Services for a DMS-250 or DEX600E switch type
  - MCI PRISM
  - MCI VNET
- Local exchange carrier services available for a DMS-100 switch type:
  - DMS Private
  - DMS OUTWATS
  - DMS FX (foreign exchange)
  - DMS Tie Trunk

Summary: Call-by-Call Service Table

Programmable by	System Manager
Mode	Key and Hybrid/PBX
Idle Condition	Not required
Planning Form	Form 3b, Incoming Trunks: DS1 Connectivity (100D module)
Factory Setting	Not applicable

Valid Entries	Pattern: up to eight digits Call Type: voice, data, both Service: AT&T Toll, 5ESS Local, MCI Toll, DMS-100 Local, Miscellaneous Delete Digits: 0 to 8
Inspect	No
Copy Option	No

Console Procedure	To specify Patterns:
	`LinesTrunks`→`PRI`→`OutgoingTbl`→`CBC Service`→ `Patterns`→Dial list no.→`Enter`→**Drop**→Dial pattern→ `Enter`→`Exit`→`Exit`→`Exit`→`Exit`
	
	To specify Voice/Data:
	`LinesTrunks`→`PRI`→`OutgoingTbl`→`CBC Service`→ `Voice/Data`→Dial list no.→`Enter`→Select voice, data, or both→ `Enter`→`Exit`→`Exit`→`Exit`→`Exit`
	
	To specify Network Service:
	`LinesTrunks`→`PRI`→`OutgoingTbl`→`CBC Service`→ `NetwkServ`→Dial list no.→`Enter`→Select service→ `Enter`→`Exit`→`Exit`→`Exit`→`Exit`
	
	To specify Delete Digits:
	`LinesTrunks`→`PRI`→`OutgoingTbl`→`CBC Service`→ `DeleteDigit`→Dial list no.→`Enter`→**Drop**→Dial no. of digits→`Enter`→`Exit`→`Exit`→`Exit`→`Exit`

PC Procedure	To specify Patterns: [F4]→[F6]→[F8]→[F3]→[F1]→Type list no.→[F10]→ [Alt] + [P]→Type pattern→[F10]→[F5]→[F5]→[F5]→[F5] To specify Voice/Data: [F4]→[F6]→[F8]→[F3]→[F2]→Type list no.→[F10]→ Select voice, data, or both→[F10]→[F5]→[F5]→[F5]→[F5] To specify Network Service: [F4]→[F6]→[F8]→[F3]→[F3]→Type list no.→[F10]→ Select service→[F10]→[F5]→[F5]→[F5] To specify Delete Digits: [F4]→[F6]→[F8]→[F3]→[F4]→Dial list no.→[F10]→ [Alt] + [P]→Dial no. of digits→[F10]→[F5]→[F5]→[F5]→[F5]

Procedure: Call-by-Call Service

Console Display/Instructions **Additional Information** **PC**

▶ 1. Select the Lines and Trunks menu.

```
System Programming:      >
Make a selection
System          Extensions
SysRenumber     Options
Operator        Tables
LinesTrunks     AuxEquip
Exit            NightSrvce
```

F4

▶ 2. Select PRI.

```
Lines and Trunks:        >
Make a selection
LS/GS/DSL       PRI
TIE Lines       Copy
TT/LS Disc      RemoteAccss
DID             Pools
Exit            Toll Type
```

F6

▶ 3. Select Outgoing Tables.

```
PRI Lines:
Make a selection
PhoneNumber     Protocol
B-ChannlGrp     DialPlanRtg
NumbrToSend     OutgoingTbl
Test TelNum     SwitchType
Exit
```

F8

▶ 4. Select Call-by-Call Service.

```
PRI Outgoing Tables:
Make a selection
NetwkSelect
SpecialServ
CBC Service

Exit
```

F3

Console Display/Instructions	Additional Information	PC
▶ **5. Select an option.**	● ◆ ■ ▲	
CallByCall Service Table: Make a selection Patterns Voice/Data NetworkServ DeleteDigit Exit	If you select Patterns, go to ● Patterns Procedure.	F1
	If you select Voice/Data, go to ◆ Voice/Data Procedure.	F2
	If you select NetworkServ, go to ■ Network Service Procedure.	F3
	If you select DeleteDigit, go to ▲ Delete Digits Procedure.	F4

● Patterns Procedure

Console Display/Instructions	Additional Information	PC
▶ **1. Enter the list (*l* = 0 to 9) and the table entry (*e* = 0 to 9) numbers.**		
CBC Services - Patterns: Enter list (0-9) and entry (0-9) Backspace Exit Enter	Dial or type [*le*].	
▶ **2. Save your entry.**		
Select Enter.		F10
▶ **3. Erase the current pattern (*nnn*).**		
CBC Serv list *l* Entry *e*: Enter pattern *nnn* Backspace Next Exit Enter	*l* = list number entered in Step 1 *e* = entry number entered in Step 1 Press **Drop**.	Alt + P

Console Display/Instructions **Additional Information** **PC**

▶ **4. Enter a pattern of up to eight digits (*n* = 0 to 9).**

Dial or type [*n*].

▶ **5. Assign a pattern to the next table or go to Step 6.**

Select Next. F9

Return to Step 3. The next table is displayed on Line 1.

▶ **6. Save your entry.**

Select Enter. F10

▶ **7. Return to the System Programming menu.**

Select Exit four times. F5 F5 F5 F5

◆ **Voice/Data Procedure**

Console Display/Instructions **Additional Information** **PC**

▶ **1. Enter the list number (*n* = 0 to 9).**

```
CBC Services Voice/Data:
Enter list number (0-9)



Backspace
Exit            Enter
```

Dial or type [*n*].

▶ **2. Save your entry.**

Select Enter. F10

Console Display/Instructions	Additional Information	PC

▶ 3. Specify voice, data, or both.

```
CBC Services List x:
Make a selection
Voice Only
Data Only
Voice/Data
                Next
Exit            Enter
```

x = number entered in Step 1

Select Voice Only, F1
Data Only, or F2
Voice/Data. F3

▶ 4. Assign to another CBC services list or go to Step 5.

Select Next. F9

Return to Step 3. The next CBC services list is displayed on Line 1.

▶ 5. Save your entry.

Select Enter. F10

▶ 6. Return to the System Programming menu.

Select Exit four times. F5 F5 F5 F5

■ Network Service Procedure

Console Display/Instructions	Additional Information	PC

▶ 1. Enter the list number (*n* = 0 to 9).

```
CBC Network Service:
Enter list number (0-9)



Backspace
Exit            Enter
```

Dial or type [*n*].

▶ 2. Save your entry.

Select Enter. F10

Console Display/Instructions	Additional Information	PC
▶ **3. Specify a Network Service.**	✚ ✪ ✶ ▲ ◆	
CBC Network Service: Make a selection AT&T Toll DMS-100Local 5ESS Local MCI Toll Misc Exit	If you select AT&T Toll, go to ✚ AT&T Toll Procedure.	F1
	If you select Local, go to. ✪ 5ESS Local Procedure.	F2
	If you select MCI Toll, go to ✶ MCI Toll Procedure.	F3
	If you select Misc, go to ▲ Miscellaneous Procedure.	F4
	If you select DMS-100, go to ◆ DMS-100 Procedure.	F6

✚ AT&T Toll Procedure

Console Display/Instructions	Additional Information	PC
▶ **1. Specify an AT&T Toll service.**		
CBC Services List *x*: Select One MegacomWATS ACCUNET SDS SoftDefNetw LongDistance Next Exit Enter	*x* = number entered in Step 1 of the ■ Network Service Procedure.	
	Press the button or function key next to your selection.	
▶ **2. Continue to specify AT&T Toll service for another list number or go to Step 3.**		
Select Next.		F9
	Return to Step 1. The next CBC services list is displayed on Line 1.	
▶ **3. Save your entry.**		
Select Enter.		F10
▶ **4. Return to the System Programming menu.**		
Select Exit four times.		F5 F5 F5 F5

5ESS Local Procedure

Console Display/Instructions	Additional Information	PC
1. Specify a local service.		
CBC Services List *x* : Select One OUTWATS 56/64 Digtl VirtPrivNet Next Exit Enter	*x* = number entered in Step 1 of the Network Service Procedure.	
	Select OUTWATS,	F1
	56/64 Digtl, or	F2
	VirtPrivNet.	F3
2. Continue to specify local service for another list number or return to Step 3.		
Select Next.		F9
	Return to Step 1. The next CBC services list is displayed on Line 1.	
3. Save your entry.		
Select Enter.		F10
4. Return to the System Programming menu.		
Select Exit four times.		F5 F5 F5 F5

▲ MCI Toll Procedure

Console Display/Instructions	Additional Information	PC

▶ 1. Specify an MCI Toll service.

```
CBC/ISA Services List x:
Select One
MCI PRISM
MCI VNET

                Next
Exit            Enter
```

x = number entered in Step 1 of the ■ Network Service Procedure.

Press the button or function key next to your selection.

▶ 2. Continue to specify MCI Toll service for another list number or go to Step 3.

Select Next. F9

Return to Step 1. The next CBC/ISA services list is displayed on Line 1.

▶ 3. Save your entry.

Select Enter. F10

▶ 4. Return to the System Programming menu.

Select Exit four times. F5 F5 F5 F5

✶ Miscellaneous Procedure

Console Display/Instructions	Additional Information	PC
▶ 1. Specify a service.		
CBC Service List *x*: Select one Other No Service Next Exit Enter	*x* = number entered in Step 1 of the Network Service Procedure. Select Other or No Service. If you select No Service, you have completed this procedure. Return to Step 6 of the main procedure.	F1 F2
▶ 2. Continue to specify the service for another service list number or go to Step 3.		
Select Next.	Return to Step 3. The next CBC services list is displayed on Line 1.	F9
▶ 3. Save your entry.		
Select Enter.		F10
▶ 4. Erase the current code (*nnnnn*).		
CBC Services List *x*: Enter Network Service (5 digit code of 0, 1) *nnnnn* Backspace Next Exit Enter	*x* = number entered in Step 1 of the Network Service Procedure. Press **Drop**.	Alt + P
▶ 5. Enter the 5-digit code for the other service.		
Dial or type [*nnnnn*].		↵
▶ 6. Continue to assign the code to another service list or return to Step 7.		
Select Next.	Return to Step 4. The next CBC services list is displayed on Line 1.	F9

Console Display/Instructions **Additional Information** **PC**

▶ **7. Save your entry.**

Select Enter. F10

▶ **8. Return to the System Programming menu.**

Select Exit four times. F5 F5 F5 F5

◆ **DMS-100 Local Procedure**

Console Display/Instructions **Additional Information** **PC**

▶ **1. Specify a DMS-100 Local service.**

```
CBC/ISA Services List x:
Select One
DMS-Private
DMS-OUTWATS
DMS-FX
DMS-TieTrk        Next
Exit              Enter
```

x = number entered in Step 1 of the Network Service Procedure.

Press the button or function key next to your selection.

▶ **2. Continue to specify DMS-100 service for another list number or go to Step 3.**

Select Next. F9

Return to Step 1. The next CBC/ISA services list is displayed on Line 1.

▶ **3. Save your entry.**

Select Enter. F10

▶ **4. Return to the System Programming menu.**

Select Exit four times. F5 F5 F5 F5

▲ Delete Digits Procedure

Console Display/Instructions	Additional Information	PC

▶ 1. Enter the list number (*n* = 0 to 9).

```
CBC Serv--Delete Digits:
Enter list number (0-9)



Backspace
Exit            Enter
```

Dial or type [*n*].

▶ 2. Save your entry.

Select Enter. F10

▶ 3. Erase the current number of delete digits (*n*).

```
CBC Services List x :
Enter number of digits
to delete (0-9)
n

Backspace       Next
Exit            Enter
```

x = number entered in Step 1

Press **Drop**. Alt + P

▶ 4. Enter the number of digits to be deleted (*n* = 0 to 8).

Dial or type [*n*].

▶ 5. Continue to assign delete digits to another service list or go to Step 6.

Select Next. F9

Return to Step 3. The next CBC services list is displayed on Line 1.

▶ 6. Save your entry.

Select Enter. F10

▶ 7. Return to the System Programming menu.

Select Exit four times. F5 F5 F5 F5

BRI Facilities

The procedures in this section provide the steps for programming the following options for Basic Rate Interface (BRI) facilities connected to an 800 NI-BRI module:

- Service Profile Identifier (SPID) and Directory Number (DN)
- Timers

NOTES:

1. The 800 NI-BRI module is only available in Release 4.0 and later.
2. If you are adding BRI facilities to an existing system, clock synchronization must be set correctly. To inspect or change these values, see "Clock Synchronization" on page 3–85.

Service Profile Identifier (SPID) and Directory Number (DN)

Use this procedure to program the Service Profile Identifier (SPID) and Directory Number (DN) for each BRI line in the system. Until these values are programmed for each line, the system considers the BRI line inactive and the line will not initialize.

NOTE:
The system will not be forced idle when SPIDs are entered. However, if for some reason a SPID changes, the line must be idle (no active call on the line) in order to change the SPID.

Summary: Service Profile Identifier (SPID) and Directory Number (DN)

Programmable by	System Manager
Mode	Key, Hybrid/PBX
Idle Condition	Not required
Planning Form	Form 3i, Incoming Trunks: BRI Options (800 NI-BRI module)
Factory Setting	none
Valid Entries	SPID: up to 20 digits (any combination of 0 to 9) DN: up to 10 digits (any combination of 0 to 9)
Inspect	No
Copy Option	No
Console Procedure	LinesTrunks→**More**→BRI→SPID/DN.→Dial line/trunk no.→Enter→Dial SPID→Enter→Dial DN→ Enter→ Exit→Exit
PC Procedure	F4 →PgUp→ F8 → F1 →Type line/trunk no.→F10→ Type SPID→F10→Type DN→F10→ F5 → F5

Procedure: Service Profile Identifier (SPID) and Directory Number (DN)

Console Display/Instructions	Additional Information	PC
1. Select the Lines and Trunks menu.		
System Programming: > Make a selection System Extensions SysRenumber Options Operator Tables LinesTrunks AuxEquip Exit NightSrvce		F4
2. Go to the second screen of the Lines and Trunks menu.		
Lines and Trunks: > Make a selection LS/GS/DSL PRI TIE Lines Copy TT/LS Disc RemoteAccss DID Pools Exit Toll Type	Press **More**.	PgUp
3. Select BRI.		
Lines and Trunks: > Make a selection HoldDiscnct LS-ID Delay PrncipalUsr ClockSync QCC Prior BRI QCC Oper T1 Data NW Exit UDP		F8

Console Display/Instructions	Additional Information	PC

4. Select Service Profile Identifier (SPID) and Directory Number (DN).

```
BRI Lines:
Make a selection
SPID/DN
Timers


Exit
```

Select SPID/DN. F1

5. Enter the line/trunk number (*nnn* = 1 to 80).

```
SPID/DN:
Enter line number

nnn

Backspace
Exit            Enter
```

Dial or type [*nnn*]. ↵

6. Erase the current SPID.

```
Line number xxx:
Enter SPID

xxxxxxxxxxxxxxxxxxx

Backspace
Exit            Enter
```

xxx = line number selected in Step x.

Press **Drop**. Alt+P

7. Enter the new SPID.

Dial or type [*xxxxxxxxxxxxxxxxxxxx*]. ↵

8. Save your entry.

Select Enter. F10

Console Display/Instructions	Additional Information	PC
▶ 9. Erase the current DN.		
Line *xxx*: Enter DN xxxxxxxxxx Backspace Next Exit Enter	*xxx* = line number selected in Step x.	
	Press **Drop**.	Alt + P
▶ 10. Enter the new DN.		
Dial or type [*xxxxxxxxxx*].		
▶ 11. Save your entry.		
Select Enter.		F10
▶ 12. Return to the System Programming menu.		
Select Exit three times.		F5 F5 F5

Timers

Use this procedure to set timer thresholds.

CAUTION:
The factory settings for these thresholds are standard and rarely need to be changed. If you are not sure of the correct timer and threshold settings for your BRI lines and trunks, check with your Lucent Technologies representative before you make a change. Incorrect settings can cause your BRI lines and trunks to malfunction.

If the network does not respond before the programmed time, the system takes the appropriate corrective action.

The timers are listed below.

- **T200 Timer.** Minimum time that the link layer waits for an acknowledgment of a message sent from the communications system to the network.
- **T203 Timer.** Maximum time that the link layer can remain inactive.
- **T303 Timer.** Times the delay in network response when the communications system sends a setup message to initiate an outgoing call.

- **T305 Timer.** Times the delay in network response when the communications system sends a disconnect message to clear a call.
- **T308 Timer.** Times the delay in network response when the communications system sends a release message to clear a call.

NOTE:
If you enter an invalid timer value, you hear an error beep and the value that was previously stored is displayed on the screen.

Table 3–5 shows the factory setting for each timer and the valid range for each threshold.

Table 3–5. Timers

Timer/ Counter	Purpose	Factory Setting	Valid Range	Increments
T200 Timer	maximum response time	1,000 ms	500 to 5,000 ms	500 ms
T203 Timer	maximum time	33 seconds	10 to 255 sec	1 sec
T303 Timer	Set up timeout	4 seconds	2 to 10 sec	1 sec
T305 Timer	Disconnect timeout	30 seconds	2 to 60 sec	1 sec
T308 Timer	Release timeout	4 seconds	2 to 10 sec	1 sec

Summary: Timers

Programmable by	System Manager
Mode	Key, Hybrid/PBX
Idle Condition	Not required
Planning Form	Form 3i, Incoming Trunks: BRI Options (800 NI-BRI module)
Factory Setting	See Table 3–5
Valid Entries	See Table 3–5
Inspect	No
Copy Option	No
Console Procedure	`LinesTrunks`→**More**→`BRI`→`Timers`→Select timer→ **Drop**→Dial no. of seconds or ms→`Enter`→`Exit`→`Exit`
PC Procedure	[F4]→[PgUp]→[F8]→[F2]→Select timer→[Alt] + [P]→ Type no. of seconds or ms→[F10]→[F5]→[F5]

Procedure: Timers

Console Display/Instructions	Additional Information	PC
1. Select the Lines and Trunks menu.		
System Programming: > Make a selection System Extensions SysRenumber Options Operator Tables LinesTrunks AuxEquip Exit NightSrvce		F4
2. Go to the second screen of the Lines and Trunks menu.		
Lines and Trunks: > Make a selection LS/GS/DSL PRI TIE Lines Copy TT/LS Disc RemoteAccss DID Pools Exit Toll Type	Press **More**.	PgUp
3. Select BRI.		
Lines and Trunks: > Make a selection HoldDiscnct LS-ID Delay PrncipalUsr ClockSync QCC Prior BRI QCC Oper Exit		F8

Console Display/Instructions	Additional Information	PC

▶ 4. Select Timers.

```
BRI Lines:
Make a selection
SPID/DN
Timers

Exit
```

F2

▶ 5. Select the timer to change.

```
BRI Timer Settings:    >
Make a selection
T200 Timer      T308 Timer
T203 Timer
T303 Timer
T305 Timer
Exit
```

▶ 6. Erase the current setting.

```
(Display depends on
  timer/counter
    selected).

Backspace
Exit            Enter
```

Press **Drop**. Alt + P

▶ 7. Enter the new setting (see Table 3–5).

Dial or type [*nnnn*]. ⏎

▶ 8. Save your entry.

Select Enter. F10

▶ 9. Return to the System Programming menu.

Select Exit twice. F5 F5

Extensions

This section contains the following procedures:

- Assigning outside lines or trunks to the buttons on a telephone (including lines and trunks used for loudspeaker paging).
- Copying line button assignments from one extension to either an individual extension or a block of extensions.
- Assigning the following buttons on telephones (for Hybrid/PBX systems only):
  - System Access or Intercom Voice
  - System Access or Intercom Ring
  - System Access or Intercom Originate Only
  - Shared System or Intercom Access
- Identifying analog multiline telephones that do not have built-in speakerphones (BIS) or Hands-Free Answer on Intercom (HFAI) capability
- Identifying analog multiline telephone extensions that require pairing of extension jacks to provide either the Voice Announce to Busy or voice and data features

Assign Trunks or Pools to Extensions

Use this procedure to assign outside lines/trunks (connected to the control unit) to specific buttons on each telephone. The lines/trunks assigned to a button on a telephone are called *personal lines.*

This procedure is used only to change or add personal lines, Loudspeaker Paging, or **Pool** buttons (Hybrid/PBX only) to telephones. See "Assign Intercom or System Access Buttons" on page 3–278 to add or change Intercom (**ICOM**) or System Access (**SA**) buttons.

SECURITY ALERT:
In Release 6.0 and later systems (Hybrid/PBX mode only), do not assign private networked lines as personal lines on telephone buttons. Do not assign pools of private network trunks (tandem PRI or tandem tie) to telephones. Do not provide dial access to these pools. Use ARS to provide access to a remote networked system's trunks for making outside calls. System users can reach extensions on the remote system by using normal inside calling procedures.

Individual lines/trunks can be assigned to a maximum of 64 extensions. Individual pools can be assigned as a **Pool** button on a maximum of 64 extensions.

The following lines/trunks cannot be assigned to a button on a telephone:

- Lines/trunks used for Music On Hold
- Lines/trunks used for maintenance alarms

NOTE:
If you use equipment that rebroadcasts music or other copyrighted materials, you may be required to obtain a copyright license from and pay license fees to a third party (such as the American Society of Composers, Artists, and Producers or Broadcast Music Incorporated). Magic on Hold® requires no such license and can be purchased from Lucent Technologies.

Pool buttons cannot be assigned to or removed from extensions unless the pool has trunks assigned. If all trunks are to be removed from a pool, all **Pool** button assignments must first be removed from extensions. Another way of handling this situation is to program another trunk into the pool and then remove the **Pool** button assignments from the extensions.

- **Hybrid/PBX only.** Individual lines/trunks assigned to a pool can be assigned to a button only on a DLC operator position. If one of the lines/trunks in a pool is assigned to a button on a non-DLC telephone, the result is a **Pool** button assignment.
- **Key only.** The system assigns the first eight line numbers to buttons on multiline telephones whether or not an outside line is physically connected. If a line is not connected, the button assignment must be removed so the user can assign a feature to the button.
- For the MDC 9000 and MLC-5 cordless multiline telephones and the MDW 9000 wireless multiline telephone, the system assigns the first eight lines connected to the control unit even though the telephone has fewer than eight buttons available. Remove the extra lines in system programming so that the appropriate number of lines is assigned to buttons on these telephones.

Lines and trunks are assigned to buttons in the order in which you press each line button on the system programming console or keyboard. Existing line assignments can be rearranged by removing all current assignments and then pressing the line buttons on the console or keyboard in the order in which they should appear on the buttons. For information on the order of the programmed buttons, refer to the button numbers on the applicable planning form for each telephone.

If you want to reserve some blank buttons for features between line buttons, a line must be assigned as a placeholder for each blank button. After all lines are assigned, remove the lines used as placeholders on the buttons reserved for features.

Summary: Assign Trunks or Pools to Extensions

Programmable by	System Manager
Mode	All, but note differences in factory settings.
Idle Condition	Extension idle
Planning Form	Form 4b, Analog Multiline Telephone Form 4d, MLX Telephone Form 4e, MFM Adjunct: MLX Telephone Form 4f, Tip/Ring Equipment Form 5a, Direct-Line Console (DLC): Analog Form 5b, Direct-Line Console (DLC): Digital Form 5c, MFM Adjunct: DLC Data Form 1a, Modem Data Workstation Data Form 1b, ISDN Terminal Adapter Data Workstation
Factory Setting	**Key Mode.** An Intercom Ring (**ICOM Ring**) button, an Intercom Voice (**ICOM Voice**) button, and the first eight lines connected to the control unit are assigned to all analog multiline telephones, MLX telephones (excluding operator positions), and MFMs connected to MLX telephones. Two Intercom Ring buttons are assigned to single-line telephones; no outside lines are assigned. **Behind Switch Mode.** Intercom Ring, Intercom Voice, and prime line buttons are assigned to all analog multiline telephones, MLX telephones (excluding operator positions), and MFMs connected to MLX telephones. Two Intercom Ring buttons are assigned to single-line telephones; no outside lines are assigned. When prime lines are assigned to MLX extensions, lines are not assigned to MFMs used to connect adjuncts. Lines for MFMs must be assigned separately. **Hybrid/PBX Mode.** System Access Ring (**SA Ring**), System Access Voice (**SA Voice**), and System Access Originate Only (**SA Orig Only**) buttons are assigned to all analog multiline telephones and MLX telephones (excluding operator positions). Five Call buttons are assigned to QCC operator positions. Two System Access Ring buttons and one System Access Originate Only button are assigned to single-line telephones. No personal line or **Pool** buttons are assigned.
Valid Entries	Extension numbers
Inspect	Yes
Copy Option	Yes

Console Procedure To program a single line/trunk:
Extensions→Lines/Trunks→Dial ext. no.→Enter→ Entry Mode→Dial line/trunk no.→Enter→Exit→Exit

To program a block of lines/trunks:
Extensions→Lines/Trunks→Dial ext. no.→
Enter→ Select trunk range→Toggle LED On/Off→
Enter→Exit→Exit

PC Procedure To program a single line/trunk:
[F6]→[F1]→Type ext. no.→[F10]→[F6]→
Type line/trunk no.→[F10]→[F5]→[F5]

To program a block of lines/trunks:
[F6]→[F1]→Type ext. no.→[F10]→Select trunk range→
Toggle letter G On/Off→[F10]→[F5]→[F5]

Procedure: Assign Trunks or Pools to Extensions

Console Display/Instructions	Additional Information	PC
▶ 1. Select the Extensions Menu.		
System Programming: > Make a selection System Extensions SysRenumber Options Operator Tables LinesTrunks AuxEquip Exit NightSrvce		[F6]
▶ 2. Select Lines and Trunks.		
Extensions: > Make a selection LinesTrunks Restrct Copy Line Copy Account Dial Outcd BIS/HFAI Restriction Call Pickup Exit VoiceSignl		[F1]

Console Display/Instructions	Additional Information	PC

▶ 3. Specify the extension.

```
Assign Lines/Trunks:
Enter extension



Backspace
Exit            Enter
```

If no DSS is attached:
SP: “Entering an Extension”

If DSS is attached:
Toggle the red LED on or off as required. Go to Step 5.
On = extension is assigned to trunk or pool.
Off = extension is not assigned to trunk or pool.

▶ 4. Save your entry.

Select Enter. F10

If you get the Station Busy message, wait for an idle condition or exit system programming and try again later.

▶ 5. Assign the extension. ● ◆

```
Extension xxxx :
Assign lines/trunks
Lines 01-20     Entry Mode
Lines 21-40
Lines 41-60
Lines 61-80
Exit
```

xxxx = extension number entered in Step 3

For a single line/trunk, go to
● Single Line/Trunk Procedure**.**

For a block of lines, go to
◆ Block Procedure**.**

● Single Line/Trunk Procedure

Console Display/Instructions	Additional Information	PC

▶ 1. Specify entry mode.

Select Entry Mode. F6

▶ 2. Enter the line or trunk number.

```
Extension xxxx :
Enter line/trunk numbers



                Delete
Backspace       Next
Exit            Enter
```

xxxx = extension number entered in Step 3

Dial or type [*nnn*].

Console Display/Instructions	Additional Information	PC
▶ **3. Assign or remove the specified line/trunk number.**		
Select Enter or		F10
Delete.		F8
	You may continue to assign or remove lines/ trunks by repeating Steps 2 and 3.	
▶ **4. Assign a single line/trunk to the next extension or go to Step 5.**		
Select Next.		F9
	Return to Step 2 to continue programming. The next extension is displayed on Line 1.	
▶ **5. Return to the System Programming menu.**		
Select Exit twice.		F5 F5

◆ **Block Procedure**

Console Display/Instructions	Additional Information	PC
▶ **1. Specify the block of 20 lines associated with 20 buttons on the system programming console.**		
Select Lines 01-20		F1
Lines 21-40		F2
Lines 41-60		F3
Lines 61-80.		F4
▶ **2. Assign or remove the line/trunk to or from the line button.**		
	Toggle the green LEDs next to each line button on or off as required. On = line/trunk or pool assigned to extension Off = line/trunk or pool not assigned to extension **For Hybrid/PBX only:** The red LED indicates: On = trunk assigned to pool Off = trunk not assigned to pool	
▶ **3. Save your entry.**		
Select Enter.		F10
▶ **4. Return to the System Programming menu.**		
Select Exit two times.		F5 F5

Copy Line/Trunk Assignments

Use this procedure to copy outside line/trunk button assignments, pool dial-out code restrictions (Hybrid/PBX only), and (for operator positions only) Night Service information from one extension to another extension or block of extensions with identical requirements.

If you are copying assignments to a block of extensions and one of the extensions in the block is in use, the display shows the `Station Busy - Pls Wait` message. Copying for the rest of the extensions in the block is delayed until the busy extension becomes idle. The number of the busy extension is not shown. If a DSS is attached, the LED associated with the busy extension is on. If you exit instead of waiting for the busy extension to become idle, copying for the rest of the extensions is canceled; however, the assignments that have already been copied are not canceled.

If you are copying assignments from an operator position to a block of extensions that includes both operator and nonoperator extensions, the information is copied to only the operator positions; the nonoperator positions are not affected. Similarly, if you are copying assignments from a nonoperator position to a block of extensions that includes both operator and nonoperator extensions, the information is copied to only the nonoperator positions; the operator positions are not affected. The system does not provide an error tone to signal that the copy did not work for all of the extensions in the block.

Summary: Copy Line/Trunk Assignments

Programmable by	System Manager
Mode	All
Idle Condition	Extension idle
Planning Form	4a, Extension Copy: Analog Multiline Telephone Template 4c, Extension Copy: MLX Telephone Template
Factory Setting	Not applicable
Valid Entries	Not applicable
Inspect	Yes: lines/pools assigned to an extension.
Copy Option	Not applicable

Console Procedure	To copy to a single extension:
	`Extensions`→`Line Copy`→`Single`→Dial copy from ext. no.→`Enter`→Dial copy to ext. no.→`Enter`→`Exit`→`Exit`
	
	To copy to a block of extensions:
	`Extensions`→`Line Copy`→`Block`→Dial copy from ext. no.→`Enter`→Dial ext. no of first extension in block→ `Enter`→Dial ext. no of last extension in block→ `Enter`→`Exit`→`Exit`

PC Procedure

To copy to a single extension:
F6 → F2 → F1 → Type copy from ext. no. → F10 → Type copy to ext. no. → F10 → F5 → F5

To copy to a block of extensions:
F6 → F2 → F2 → Type copy from ext. no. → F10 → Type ext. no. of first extension in block → F10 → Type ext. no. of last extension in block → F10 → F5 → F5

Procedure: Copy Line and Trunk Assignments

Console Display/Instructions	Additional Information	PC
1. Select the Extensions menu.		
System Programming: >		
Make a selection		
System Extensions		
SysRenumber Options		
Operator Tables		
LinesTrunks AuxEquip		
Exit NightSrvce		F6
2. Select Line Copy.		
Extensions: >		
Make a selection		
LinesTrunks Restrct Copy		
Line Copy Account		
Dial Outcd BIS/HFAI		
Restriction Call Pickup		
Exit VoiceSignl		F2
3. Copy the line assignments to individual extensions or to a block of extensions.	● ◆	
Copy Lines:		
Make a selection		
Single		
Block		
Exit		
	To copy to a block of extensions, they must be connected to sequentially numbered extension jacks (for example, logical IDs 11, 12, 13 and so on).	F2
	To copy line assignments to a single extension, select Single and go to ● Single Extension Procedure. To copy line assignments to a block of extensions, select Block and go to ◆ Block Procedure.	F1

● Single Extension Procedure

Console Display/Instructions	Additional Information	PC

▶ 1. Specify the extension you want to copy from.

```
Copy Lines:
Enter extension to copy
from


Backspace
Exit            Enter
```

SP: “Entering an Extension”

▶ 2. Save your entry.

Select Enter. F10

▶ 3. Specify the extension to copy assignments to.

```
Copy extension xxxx to:
Enter extension



Backspace       Next
Exit            Enter
```

xxxx = extension entered in Step 1.

SP: “Entering an Extension”

▶ 4. Save your entry. Continue to copy line assignments or go to Step 5.

Select Enter or F10
Next. F9

After selecting Enter, you may continue to copy line assignments from the extension currently displayed on Line 1 to additional extensions.

After selecting Next, you may copy line assignments from the next sequential extension. Select Enter (F10) after completing programming.

Return to Step 3 to continue programming. The extension to be copied from is displayed on Line 1.

▶ 5. Return to the System Programming menu.

Select Exit two times. F5 F5

◆ Block Procedure

Console Display/Instructions	Additional Information	PC

▶ 1. Specify the extension you want to copy from.

```
Copy Lines:
Enter extension to copy
from


Backspace
Exit            Enter
```

SP: “Entering an Extension”

▶ 2. Save your entry.

Select Enter. F10

▶ 3. Enter the logical ID of the first extension number in the block to be copied to.

```
Copy extension      xxxx
Enter starting extension
logical id (#1 - #200)


Backspace
Exit            Enter
```

xxxx = extension entered in Step 4 of the main procedure

Dial or type #[*nnn*].

▶ 4. Save your entry.

Select Enter. F10

▶ 5. Enter the logical ID of the last extension number in the block to be copied to.

```
Start at extension xxxx
Enter ending extension
logical id (#1 - #200)


Backspace
Exit            Enter
```

xxxx = extension number of logical id entered in Step 1

Dial or type #[*nnn*].

▶ 6. Save your entry.

Select Enter. F10

▶ 7. Return to the System Programming menu.

Select Exit twice. F5 F5

Assign Intercom or System Access Buttons

Use this procedure to assign or change the assignments for Intercom (**ICOM**) buttons used to make and receive inside calls. This includes the following types of Intercom buttons:

- Ring
- Voice
- Originate Only (Ring or Voice)

In Hybrid/PBX mode only, use this procedure to assign or change assignments for System Access (**SA**) buttons used to make or receive inside and outside calls. This procedure includes the following types of System Access buttons:

- Ring
- Voice
- Originate Only (Ring or Voice)
- Shared (Ring or Voice)

NOTE:
You cannot change the factory setting for **Call** buttons assigned to QCC operator positions, and you cannot assign **Ring**, **Voice**, **Originate Only**, or **Shared** buttons to QCC operator positions. However, in Release 4.0 and later, the **Call 5** (Ring/Voice) button on a QCC can be programmed for Voice Announce. See “Voice Announce” on page 395.

System Access or Intercom buttons can be assigned to only the first 10 buttons on a telephone.

You can assign a combination of up to 10 System Access or Intercom buttons to each telephone (excluding QCC operator positions).

You can remove System Access or Intercom buttons, but at least one must remain on the extension.

NOTE:
When single-line sets are programmed with only one System Access or Intercom button, the Transfer, Conference and Drop features are disabled. Other features that require a second dial tone, such as Account Code/Number Entry, After Call Work States, Call Pickup, Call Waiting, and Privacy, are also affected. For more information, see the *Feature Reference.*

Each System Access Ring or Voice on an individual telephone can be assigned as a Shared System Access (**SSA**) button on up to 16 other extensions.

Shared SA buttons cannot be assigned to single-line telephones or other tip/ring equipment connected to an 016 T/R, 012 T/R, or 008 OPT module. Shared **SA** buttons can be assigned to a tip/ring or external alert device connected to an MFM in an MLX telephone or a GPA connect to an analog multiline telephone. **Shared SA** buttons cannot be assigned when the corresponding **SA** button is on a single-line set.

Release 3.0 and later
Each **System Access Ring** or **Voice** on an individual extension can be assigned as a Shared System Access (**SSA**) button on up to 27 other extensions.

System Access and Intercom buttons are centrally programmed and cannot be programmed by individual extension users.

Summary: Assign Intercom or System Access Buttons

Programmable by	System Manager
Mode	All, but note differences in factory settings
Idle Condition	Extension idle
Planning Form	Form 4b, Analog Multiline Telephone Form 4d, MLX Telephone Form 4e, MFM Adjuncts: MLX Telephone Form 4f, Tip/Ring Equipment Form 5a, Direct-Line Console (DLC): Analog Form 5b, Direct-Line Console (DLC): Digital Form 5c, MFM Adjunct (DLC) Data Form 1a, Modem Data Workstation Data Form 1b, ISDN Terminal Adapter Data Workstation
Factory Setting	**Key Mode.** An Intercom Ring (**ICOM Ring**), an Intercom Voice (**ICOM Voice**), and the first eight lines connected to the system are assigned to all analog multiline and MLX telephones, excluding operator positions. Two Intercom Ring buttons are assigned to tip/ring equipment connected on an 012 T/R or 016 T/R module. An Intercom Ring and an Intercom Originate Only (**ICOM Orig Only**) button are assigned to tip/ring equipment connected by an MFM. No outside lines are assigned. **Behind Switch Mode.** An Intercom Ring, an Intercom Voice, and a prime line button are assigned to all analog multiline and MLX telephones, excluding operator positions. Two Intercom Ring buttons and a prime line button are assigned to tip/ring equipment connected to an 012 T/R module. An Intercom Ring and an Intercom Originate Only Ring button are assigned to tip/ring equipment connected by an MFM. No outside lines are assigned.

Hybrid/PBX Mode. System Access Ring (**SA Ring**), System Access Voice (**SA Voice**), and System Access Originate Only Ring (**SA Orig Only**) buttons are assigned to all analog multiline and MLX telephones, excluding operator positions. Two System Access Ring buttons and a System Access Originate Only Ring button are assigned to tip/ring equipment (for example, single-line telephones or fax machines connected to an 012 T/R module). No personal line or pool buttons are assigned.

All Modes. System Access Ring (Hybrid/PBX mode) or Intercom Ring (Key and Behind Switch modes), System Access Voice (Hybrid/PBX mode) or Intercom Voice (Key and Behind Switch modes), and the first 18 through 29 lines connected to the control unit are assigned to all DLC operator positions. The number of lines assigned depends on the type of telephone used as a DLC operator position. Refer to the appropriate telephone planning form for details.

Valid Entries — Not applicable

Inspect — Yes: specific button options

Copy Option — Yes. (You can copy additional **SA** buttons to another extension, but you cannot overwrite **SA** buttons that are already assigned.)

Console Procedure — To program extension:
More→`Cntr-Prg`→`Program Ext.`→Dial ext. no.→
`Enter`→`Start`→`Program extension`→`Enter`→ `Exit`→`Exit`

To copy extension programming:
More→`Cntr-Prg`→Copy ext.→Dial copy from ext. no.→
`Enter`→Dial copy to ext. no.→`Enter`→`Exit`→`Exit`

PC Procedure — To program extension:
[PgUp]→[F4]→[F1]→Type ext. no.→[F10]→
Program extension→[F10]→[F5]→[F5]

To copy extension programming:
[PgUp]→[F4]→[F2]→Type copy from ext. no.→[F10]→
Type copy to ext. no.→[F10]→[F5]→[F5]

Procedure: Assign Intercom or System Access Buttons

Console Display/Instructions	Additional Information	PC
▶ **1. Go to the second screen of the System Programming menu.**		
System Programming > Make a selection System Extensions SysRenumber Options Operator Tables LinesTrunks AuxEquip Exit NightSrvce	Press **More.**	PgUp
▶ **2. Select Centralized Telephone Programming.**		
System Programming: Make a selection Labeling Language Data Print Cntr-Prg Exit		F4
▶ **3. Select an extension option.**	● ◆	
Centralized Programming: Make a selection Program Ext Copy Ext Exit	Select Program Ext and go to ● Program Extensions Procedure. Select Copy Ext and go to ◆ Copy Extension Procedure.	F1 F2

● Program Extensions Procedure

Although you can make selections from the screen (with the ListFeature option) to assign **Ring** and **Voice** buttons, the following procedure provides the programming codes to perform these functions. Using the codes speeds the button assignment process.

When you enter the programming code for assigning a Ring button, the screen in Step 6 of the following procedure changes to the first List Feature screen, then returns to the screen shown in Step 6.

Table 3–6 provides the programming codes for assigning Ring and Voice buttons. You can handle errors in data entry as follows:

- If you enter a feature code incorrectly while programming, the display shows the `Programming Error` message and the red LED next to the button flashes. If this happens, press the button again and repeat the procedure.
- If you make a mistake and program the wrong feature on a button, press the button, select `Delete` (F1 on the PC), and press the button again

Table 3–6. Programming Codes for Assigning Buttons

Use	On the Console	On the PC
To assign **SA** or **ICOM Ring** button	Dial *16	Type *16
To assign **SA** or **ICOM Voice** button	Dial *16, press button being programmed again, and dial *19	Type *16, press Shift + function key for button being programmed again, and type *19
To assign **SA** or **ICOM** Originate Only **Ring** button	Dial *18	Type *18
To assign **SA** or **ICOM** Originate Only **Voice** button	Dial *18, press button being programmed again, and dial *19	Type *18, press Shift + function key for button being programmed again, and type *19
To assign **SA** button	Dial *17, press the extension number of principal telephone *[nnnn]* then press the button number being shared *[nn]*	Type *17, press the extension number of principal telephone *[nnnn]* then press the button number of specific button being shared *[nn]*
To change current assignment for **SA** or **ICOM** Voice, Originate Only or Shared **SA** buttons from **Voice** to **Ring**	Dial **19	Type **19

Console Display/Instructions	Additional Information	PC
▶ 1. Specify an extension.		
Centralized Programming: Enter extension Backspace Exit Enter	**SP:** "Entering an Extension"	
▶ 2. Save your entry.		
Select Enter.		F10
▶ 3. Select Start.		
Extension Program *xx* Press HOME to exit Sys Program Start	*xx* = extension entered in Step 1	F10
▶ 4. Select the line buttons associated with the 20 line buttons on the system programming console or PC.		
Select Button: Extension Program *xx* Page 1 Page 2 Sys Program	*xx* = number entered in Step 1 To select buttons 1 to 20, select Page 1. To select buttons 21 to 34, select Page 2.	 F6 F7
▶ 5. Select the button you want to program.		
	Press the button or function key next to your selection.	

Console Display/Instructions **Additional Information** **PC**

▶ **6. Enter the programming code for voice or ring button.**

```
****
Press HOME to Exit
Delete          Page 1
                Page 2


Sys Program     ListFeature
```

**** =contents of button selected in Step 5 (Voice, Ring, or blank)

See Table 3–6.

▶ **7. Assign a voice or ring attribute.**

To assign the voice attribute to the Ring button, select the same button and enter the programming code for voice (see Table 3–6).

To assign Voice buttons, first assign the button as a Ring button, then program the button with the voice attribute (see Table 3–6).

▶ **8. Repeat Step 6 to program another button for the extension entered in Step 1 or go to Step 9.**

▶ **9. Save your entry.**

Select Enter. F10

▶ **10. Return to the System Programming menu.**

Select Exit two times. F5 F5

◆ **Copy Extension Procedure**

Console Display/Instructions **Additional Information** **PC**

▶ **1. Enter the extension to copy from.**

```
Extension Program Copy
Enter extension to copy
from


Backspace
Exit            Enter
```

SP: “Entering an Extension”

Console Display/Instructions	Additional Information	PC
▶ **2. Save your entry.**		
Select Enter.		F10
▶ **3. Enter the extension to copy to.**		
Copy Extension *xxxx* to: Enter extension Backspace Next Exit Enter	*xxxx* = extension entered in Step 1 **SP:** “Entering an Extension”	
▶ **4. Save your entry. Then, continue to copy button assignments or go to Step 5.**		
Select Enter or Next.	After selecting Enter, you may continue to copy button assignments from the extension displayed on Line 1 to additional extensions. After selecting Next, you may copy button assignments from the next sequential extension. Return to Step 3 to continue programming. The extension to be copied from is displayed on Line 1.	F10 F9
▶ **5. Return to the System Programming menu.**		
Select Exit twice.		F5 F5

Analog Multiline Telephone without Built-in Speakerphone (BIS) or Hands-Free Answer on Intercom (HFAI) Capability

Use this procedure to identify analog multiline telephones with flat membrane buttons that do not have BIS or HFAI capability. The models that must be identified are 5-button, 10-button, 34-button, and 34-button deluxe analog multiline models with flat membrane buttons.

Keep the factory setting for analog multiline models with raised plastic buttons, including the following models: 10-button HFAI, 34-button with speakerphone (SP-34), 34-button with speakerphone and display (SP-34D), BIS-10, BIS-22, BIS-34, BIS-22D, and BIS-34D.

This procedure is not necessary for MLX or single-line telephones.

Summary: Analog Multiline Telephones without BIS or HFAI Capability

Programmable by	System Manager
Mode	All
Idle Condition	Not required
Planning Form	Form 4b, Analog Multiline Telephone Form 5a, Direct-Line Console (DLC): Analog Data Form 1a, Modem Data Workstations
Factory Setting	All models of analog multiline telephones (except the analog multiline display console) have BIS/HFAI capability.
Valid Entries	Extension numbers
Inspect	Yes
Copy Option	No
Console Procedure	`Extensions`→`BIS/HFAI`→Dial ext. no.→`Enter`→ `Exit`→`Exit`
PC Procedure	F6 → F8 →Type ext. no.→F10 → F5 → F5

Procedure: Analog Multiline Telephones without BIS or HFAI Capability

Console Display/Instructions	Additional Information	PC

▶ 1. Select the Extensions menu.

```
System Programming:      >
Make a selection
System          Extensions
SysRenumber     Options
Operator        Tables
LinesTrunks     AuxEquip
Exit            NightSrvce
```

F6

▶ 2. Select BIS/HFAI.

```
Extensions:              >
Make a selection
LinesTrunks     RestrctCopy
Line Copy       Account
Dial Outcd      BIS/HFAI
Restriction     Call Pickup
Exit            VoiceSignl
```

F8

▶ 3. Specify the extension.

```
BIS/HFAI Extensions:
Enter extensions


                Delete
Backspace
Exit            Enter
```

If no DSS is attached:
SP: “Entering an Extension”

If DSS is attached:
Toggle the red LED on or off as required. Go to Step 5.
On = telephone has BIS/HFAI capability.
Off = telephone does not have BIS/HFAI capability.

▶ 4. Assign or remove BIS/HFAI capability.

Select Enter or F10
Delete. F8

You may continue to assign or remove BIS/HFAI capability to additions extensions by repeating Steps 3 and 4.

▶ 5. Return to the System Programming menu.

Select Exit twice. F5 F5

Analog Multiline Telephones with Voice Announce to Busy

Use this procedure to dedicate a voice or voice pair to be used to provide the Voice Announce to Busy feature on an analog multiline telephone.

The extension number associated with the first (odd-numbered) extension jack in the pair is the telephone's extension number. The extension number for the second (even-numbered) extension jack is dedicated to the Voice Announce to Busy feature. Calls cannot be placed to the extension jack reserved for the Voice Announce to Busy feature.

Voice Announce to Busy must be disabled at data workstations.

NOTE:
This procedure does not apply to MLX telephones (Voice Announce to Busy is automatically provided) and cannot be programmed for single-line telephones.

Summary: Analog Multiline Telephones with Voice Announce to Busy

Programmable by	System Manager
Mode	All
Idle Condition	System idle
Planning Form	Form 4b, Analog Multiline Telephone Form 5a, Direct-Line Console (DLC) Analog Data Form 1a, Modem Data Workstation
Factory Setting	Not applicable
Valid Entries	Extension numbers
Inspect	Yes
Copy Option	Yes
Console Procedure	`Extensions`→`VoiceSignl`→Dial ext. no.→`Enter`→`Exit`→`Exit`
PC Procedure	F6→F10→Type ext. no.→F10→F5→F5

NOTE:
"Data Features" on page 3–618 provides information about analog multiline telephones in data workstations.

Procedure: Analog Multiline Telephones with Voice Announce to Busy

Console Display/Instructions	Additional Information	PC

1. Select the Extensions menu.

```
System Programming:      >
Make a selection
System          Extensions
SysRenumber     Options
Operator        Tables
LinesTrunks     AuxEquip
Exit            NightSrvce
```

F6

2. Select Voice Signal.

```
Extensions:              >
Make a selection
LinesTrunks     RestrctCopy
Line Copy       Account
Dial Outcd      BIS/HFAI
Restriction     Call Pickup
Exit            VoiceSignl
```

F10

3. Specify the first extension (odd numbered) of the pair.

```
Voice Signal Pair:
Enter voice signal pairs


                Delete
Backspace
Exit            Enter
```

If no DSS is attached:
SP: “Entering an Extension”

The other extension in the pair is automatically assigned: Press the **Inspct** button to view the pair.

If DSS is attached:
Toggle the red LED on or off as required. Go to Step 5.
On = assigns pairing for Voice Announce to busy.
Off = removes pairing for Voice Announce to busy.
The red LED goes on automatically for the other extension in the pair.

Console Display/Instructions	Additional Information	PC
▶ 4. Specify whether or not the extension is paired for Voice Announce to Busy.		
Select `Enter` or		F10
`Delete`.		F8
	You may continue to assign or remove the Voice Announce to Busy feature to additional extensions by repeating Steps 3 and 4.	
▶ 5. Return to the System Programming menu.		
Select `Exit` twice.		F5 F5

Auxiliary Equipment

The procedures in this section describe the steps needed to perform the following:

- Identify the line/trunk jacks used for Music on Hold, loudspeaker paging, and maintenance alarms
- Identify the extension jacks used for fax and CTI link.
- Specify parameters for MERLIN LEGEND Mail, Messaging 2000, Intuity AUDIX, MERLIN MAIL Voice Messaging System*, Automated Attendant, and AUDIX Voice Power*

Music On Hold

Use this procedure to identify the line/trunk jack reserved for connection of a music source, such as a radio, tape player, or stereo system.

If you use equipment that rebroadcasts music or other copyrighted materials, you may be required to obtain a copyright license from and pay license fees to a third party [such as the American Society of Composers, Artists, and Producers (ASCAP) or Broadcast Music Incorporated (BMI)]. Magic on Hold requires no such license and can be purchased from your Lucent Technologies dealer.

Only one Music on Hold line/trunk jack is allowed per system.

You cannot assign the line/trunk identified for Music on Hold to a line/trunk pool. If the line/trunk is currently assigned to a pool, you must remove it before you program this option.

You cannot assign the line/trunk identified for use with Music on Hold to a button on any extension or as a Remote Access trunk, and you cannot use the line/trunk jack identified for Music on Hold for a loudspeaker paging system or maintenance alarm.

In Release 6.0 and later systems, each system in a private network must have its own music source. A music source connected to a remote private networked switch cannot be used by the local system.

* No longer orderable.

Summary: Music on Hold

Programmable by.	System Manager
Mode.	All, but in Hybrid/PBX mode the line/trunk designated for Music on Hold cannot be assigned to a line/trunk pool.
Idle Condition	System idle
Planning Form	Form 2c, System Numbering: Line/Trunk Jacks
Factory Setting	Not Applicable
Valid Entries	Line/trunk number
Inspect	No
Copy Option	No
Console Procedure	AuxEquip→MusicOnHold→Dial line/trunk no.→Enter→Exit
PC Procedure	F9 → F1 →Type line/trunk no.→F10 → F5

Procedure: Music on Hold

Console Display/Instructions	Additional Information	PC
▶ 1. Select the Auxiliary Equipment menu.		
System Programming: > Make a selection System Extensions SysRenumber Options Operator Tables LinesTrunks AuxEquip Exit NightSrvce		F9
▶ 2. Select Music on Hold.		
Auxiliary Equipment: > Make a selection MusicOnHold VMS/AA Ldspkr Pg CTI Link Fax MaintAlarms Exit		F1

Console Display/Instructions	Additional Information	PC
▶ **3. Enter the line/trunk.**		
Music on Hold Enter music on hold line Delete Backspace Exit Enter	If the line/trunk appears on the screen and you want to remove the Music on Hold assignment, go to Step 4.	
	Dial or type: Trunk number [*nnn*] Slot and port number ∗[*sspp*] Logical ID number #[*nnn*]	↵
▶ **4. Assign or remove the line/trunk assignment.**		
Select Enter or Delete.		F10 F8
▶ **5. Return to the System Programming menu.**		
Select Exit.		F5

Loudspeaker Paging

Use this procedure to identify the line/trunk jack reserved for connection of loudspeaker paging equipment.

If you use equipment that rebroadcasts music or other copyrighted materials, you may be required to obtain a copyright license from and pay license fees to a third party (such as ASCAP or BMI). Magic on Hold requires no such license and can be purchased from your Lucent Technologies dealer.

A maximum of three single-zone or multizone loudspeaker paging systems can be connected to the system.

You cannot assign the line/trunk identified for loudspeaker paging equipment use to a line/trunk pool. If the line/trunk is currently assigned to a pool, you must remove it before you program this option.

You cannot assign the line/trunk identified for loudspeaker paging equipment use as a Remote Access line/trunk, and you cannot use its jack for Music on Hold or maintenance alarm.

Summary: Loudspeaker Paging

Programmable by	System Manager
Mode.	All, but in Hybrid/PBX mode the line/trunk designated for loudspeaker paging cannot be assigned to a line/trunk pool.
Idle Condition.	Line/trunk idle
Planning Form.	Form 2c, System Numbering: Line/Trunk Jacks
Factory Setting.	Not Applicable
Valid Entries.	Line/trunk numbers
Inspect.	Yes
Copy Option.	No
Console Procedure.	AuxEquip→Ldspkr Pg→Dial line/trunk no.→Enter→Exit
PC Procedure.	F9 → F2 →Type line/trunk no.→F10 → F5

Procedure: Loudspeaker Paging

Console Display/Instructions **Additional Information** **PC**

▶ 1. Select the Auxiliary Equipment menu.

```
System Programming:      >
Make a selection
System          Extensions
SysRenumber     Options
Operator        Tables
LinesTrunks     AuxEquip
Exit            NightSrvce
```

F9

▶ 2. Select Loudspeaker Page.

```
Auxiliary Equipment:     >
Make a selection
MusicOnHold     VMS/AA
Ldspkr Pg       CTI Link
Fax
MaintAlarms
Exit
```

F2

Console Display/Instructions	Additional Information	PC
▶ **3. Enter the line/trunk.**		
Loudspeaker Page: Enter loudspeaker pg line Delete Backspace Exit Enter	If the line/trunk appears on the screen and you want to remove the loudspeaker assignment, go to Step 4.	
	Dial or type: Trunk number [*nnn*] Slot and port number ∗[*sspp*] Logical ID number #[*nnn*]	↵
▶ **4. Assign or remove the line/trunk assignment.**		
Select Enter or Delete.		F10 F8
▶ **5. Return to the System Programming menu.**		
Select Exit.		F5

Fax Machines

Use this procedure to add a fax machine by assigning the extension jack used to connect the fax machine. To remove a fax machine and free the extension jack for another use, you must remove the extension jack assignment.

In addition, you can specify the extensions to receive a message-waiting indication (MWI) when a fax transmission is received, and specify the length of time before the system registers that a fax has arrived and sends the message-waiting indication.

NOTE:
Do not use this procedure for fax machines connected to analog multiline telephones with a General Purpose Adapter (GPA). In a GPA configuration, features cannot be assigned to the fax independently of the telephone.

A maximum of 16 fax machines can have the Fax Message Waiting feature. Additional fax machines (more than 16) can be installed, but these machines cannot have this feature.

You can specify up to four telephones to receive the message-waiting indication when a fax transmission is received. Note that fax machines can only send and not receive message-waiting indications.

Summary: Fax Machines

Programmable by	System Manager
Mode	All
Idle Condition	Not required
Planning Form	Form 4b, Analog Multiline Telephone Form 4d, MLX Telephone Form 4e, MFM Adjunct: MLX Telephone Form 4f, Tip/Ring Equipment Form 5a, Direct-Line Console (DLC): Analog Form 5b, Direct-Line Console (DLC): Digital Form 5c, MFM Adjunct: DLC
Factory Setting	10 seconds
Valid Entries	0 to 30 seconds
Inspect	Yes
Copy Option	No
Console Procedure	`AuxEquip`→`Fax`→`Extension`→Dial ext. no.→`Enter`→ `Exit`→`Msg Waiting`→Dial fax machine ext. no.→`Enter`→ Dial MWI ext. no.→`Enter`→`Threshold`→**Drop**→ Dial no. of seconds→`Enter`→`Exit`→`Exit`
PC Procedure	[F9]→[F3]→[F1]→Type ext. no.→[F10]→[F5]→[F2]→ Type fax machine ext. no.→[F10]→Type MWI ext. no.→ [F10]→[F3]→[Alt] + [P]→Type no. of seconds [F10]→[F5]→[F5]

Procedure: Fax Machines

Console Display/Instructions	Additional Information	PC
▶ **1. Select the Auxiliary Equipment menu.**		

`System Programming: >`
`Make a selection`
`System Extensions`
`SysRenumber Options`
`Operator Tables`
`LinesTrunks AuxEquip`
`Exit NightSrvce`
		[F9]

Console Display/Instructions **Additional Information** **PC**

▶ 2. Select Fax.

```
Auxiliary Equipment:     >
Make a selection
MusicOnHold     VMS/AA
Ldspkr Pg
Fax
MaintAlarms
Exit
```

F3

▶ 3. Select Extension.

```
Fax:
Make a selection
Extension
Msg Waiting
Threshold

Exit
```

F1

▶ 4. Specify the extension to be used for the fax machine.

```
Fax Extension:
Enter fax extension

                Delete
Backspace
Exit            Enter
```

If no DSS is attached:
SP: “Entering an Extension”

If DSS is attached:
Toggle the red LED on or off as required. Go to Step 6.
On = jack connects to fax machine
Off = jack provides another purpose

▶ 5. Assign or remove the extension.

Select Enter or F10
Delete. F8

You may continue to assign or remove fax machines to additional extensions by repeating Steps 4 and 5.

▶ 6. Return to the Fax menu.

Select Exit. F5

Console Display/Instructions **Additional Information** **PC**

▶ 7. Select Message Waiting.

```
Fax:
Make a selection
Extension
Msg Waiting
Threshold

Exit
```

F2

▶ 8. Enter the extension for the fax machine that is to send the message-waiting indication.

```
Fax Msg. Waiting
Enter the fax extension
number


Backspace
Exit            Enter
```

SP: “Entering an Extension”

▶ 9. Save your entry.

Select **Enter.** F10

▶ 10. Specify the extension to receive the message-waiting indication.

```
Fax xxxx :
Enter message waiting
extension

                Delete
Backspace       Next
Exit            Enter
```

xxxx = number entered in Step 8

If no DSS is attached:
SP: “Entering an Extension”

If DSS is attached:
Toggle the red LED on or off as required. Go to Step 13.
On = assign message-waiting indication to extension
Off = remove message-waiting indication from extension

Console Display/Instructions	Additional Information	PC
▶ **11. Assign or remove the extension to receive the message-waiting indication.**		
Select Enter or		F10
Delete.		F8
	You may continue to assign or remove message-waiting indication to additional extensions by repeating Steps 10 and 11.	
▶ **12. Continue to assign the message-waiting indication to another fax extension or go to Step 13.**		
Select Next.		F9
	Return to Step 10 to continue programming. The next fax extension is displayed on Line 1.	
▶ **13. Return to the Fax menu.**		
Select Exit.		F5
▶ **14. Select Threshold.**		

```
Fax:
Make a selection
Extension
Msg Waiting
Threshold

Exit
```

F3

▶ **15. Erase the current number of seconds (*xx*).**

```
FAX Threshold Duration:
Enter duration (0-30sec)

xx

Backspace
Exit            Enter
```

Press **Drop.** Alt + P

▶ **16. Enter the number of seconds to wait before the system is notified that a fax message has arrived (*nn* = 0 to 30).**

Dial or type [*nn*]. ↵

Console Display/Instructions	Additional Information	PC
▶ **17. Save your entry.**		
Select `Enter`.		F10
▶ **18. Return to the System Programming menu.**		
Select `Exit` twice.		F5 F5

Maintenance Alarms

Use this procedure to identify the line/trunk jack that connects an external alerting device that sounds or flashes when major maintenance problems occur.

You cannot assign the line/trunk identified for the maintenance alarm to a button on any telephone or as a Remote Access trunk, and you cannot use its line/trunk jack to connect a loudspeaker paging system or Music on Hold.

Summary: Maintenance Alarms

Programmable by	System Manager
Mode	All, but in Hybrid/PBX mode, the line/trunk designated for the maintenance alarm cannot be assigned to a line/trunk pool. Idle ConditionSystem idle
Planning Form	Form 2c, System Numbering: Line/Trunk Jacks
Factory Setting	Not Applicable
Valid Entries	Line/trunk number
Inspect	No
Copy Option	No
Console Procedure	`AuxEquip`→`MaintAlarms`→Dial line/trunk no.→`Enter`→`Exit`→`Exit`
PC Procedure	F9 → F4 →Type line/trunk no.→F10 → F5 → F5

Procedure: Maintenance Alarms

Console Display/Instructions	Additional Information	PC

▶ 1. Select the Auxiliary Equipment menu.

```
System Programming:      >
Make a selection
System          Extensions
SysRenumber     Options
Operator        Tables
LinesTrunks     AuxEquip
Exit            NightSrvce
```

F9

▶ 2. Select Maintenance Alarms.

```
Auxiliary Equipment:
Make a selection
MusicOnHold     VMS/AA
Ldspkr Pg       CTI Link
Fax
MaintAlarms
Exit
```

F4

▶ 3. Enter the line/trunk jack to which the maintenance alarm is connected.

```
Maintenance Alarms:
Enter maintenance alarm
line number

                Delete
Backspace
Exit            Enter
```

Dial or type:
Trunk number [*nnn*]
Slot and port number ∗[*sspp*]
Logical ID number #[*nnn*]

▶ 4. Assign or remove the line/trunk.

Select Enter or F10
Delete. F8

▶ 5. Return to the System Programming menu.

Select Exit twice. F5 F5

Voice Messaging System and Automated Attendant

Use this procedure to specify the touch-tone duration and the interval between digits in codes sent between a voice messaging system and the communications system. The touch-tone duration and interval between digit assignment must be the same as those programmed on the voice messaging system.

In addition, this procedure can be used to specify the number of rings before a call transferred to a local extension by the voice messaging system is sent to the backup position for both integrated and generic VMI ports. The number of rings cannot be programmed for individual voice messaging systems; the single setting applies for all. Use the Group Type procedure in “Optional Group Features” to assign VMI ports as either integrated or generic.

NOTE:
This does not apply to calls transferred to a non-local extension. See the *Network Reference* for information.

SECURITY ALERT:
See “Security Risks Associated with the Automated Attendant Feature of Voice Messaging Systems” on page A–14 and “Security Risks Associated with Transferring through Voice Messaging Systems” on page A–12 in Appendix A, “Customer Support Information” for details on preventing toll fraud.

Summary: Voice Messaging System and Automated Attendant

Programmable by	System Manager
Mode	All
Idle Condition	Not required
Planning Form	See forms packaged with application
Factory Setting	Touch-tone duration: 100 ms Interval between digits: 50 ms Number of rings before transfer sent to backup: 4
Valid Entries	Touch-tone duration: 50 to 200 ms, in increments of 25 ms Interval between digits: 50 to 200 ms, in increments of 25 ms Number of rings before transfer sent to backup: 0 to 9
Inspect	No
Copy Option	No

Console Procedure AuxEquip→VMS/AA→TransferRtn→**Drop**→Dial no. of rings→Enter→TT Duration→**Drop**→Dial no. of ms→Enter→TT Interval→**Drop**→Dial no. of ms→Enter→Exit→Exit

PC Procedure [F9]→[F6]→[F1]→[Alt] + [P]→Type no. of rings→[F10]→[F2]→[Alt] + [P]→Type no. of ms→[F10]→[F3]→[Alt] + [P]→Type no. of ms→[F10]→[F5]→[F5]

Procedure: Voice Messaging System and Automated Attendant

Console Display/Instructions	Additional Information	PC
▶ **1. Select the Auxiliary Equipment menu.**		
System Programming: > Make a selection System Extensions SysRenumber Options Operator Tables LinesTrunks AuxEquip Exit NightSrvce		[F9]
▶ **2. Select Voice Messaging/Automated Attendant.**		
Auxiliary Equipment: Make a selection MusicOnHold VMS/AA Ldspkr Pg CTI Link Fax MaintAlarms Exit		[F6]
▶ **3. Select Transfer Return.**		
VMS/AA: Make a selection TransferRtn TT Duration TT Interval Exit	If you do not want to change the current setting for number of rings before transfer, go to Step 7.	[F1]

Console Display/Instructions **Additional Information** **PC**

▶ **4. Erase the current interval setting (*x*).**

```
VMS TransferRtn Invervl:
Enter return interval
(0-9)
x

Backspace
Exit            Enter
```

Press **Drop**. Alt+P

▶ **5. Enter the number of rings before calls are transferred to the backup position (*n* = 0 to 9).**

Use 0 to specify that unanswered calls are not transferred to backup position.

Dial or type [*n*].

▶ **6. Save your entry.**

Select Enter. F10

▶ **7. Select Touch-Tone Duration.**

```
VMS/AA:
Make a selection
TransferRtn
TT Duration
TT Interval

Exit
```

If you do not want to change the current setting for touch-tone duration, go to Step 11.

F2

▶ **8. Erase the current touch-tone duration setting (*xxx*).**

```
Touch-Tone Duration:
Enter duration length
(50-200 ms, increment 25)
xxx

Backspace
Exit            Enter
```

Press **Drop**. Alt+P

Console Display/Instructions **Additional Information** **PC**

▶ **9. Enter the touch-tone duration in milliseconds (*nnn* = 50 to 200).**

Dial or type [*nnn*].

▶ **10. Save your entry.**

Select Enter. F10

▶ **11. Select Touch-Tone Interval.**

```
VMS/AA:
Make a selection
TransferRtn
TT Duration
TT Interval

Exit
```

If you do not want to change the setting for touch-tone interval, you have finished this procedure. Go to Step 15.

F3

▶ **12. Erase the current touch-tone interval setting (*xxx*).**

```
Touch-Tone Interval:
Enter interval length
(50-200 ms)
xxx

Backspace
Exit          Enter
```

Press **Drop**. Alt + P

▶ **13. Enter the touch-tone interval in milliseconds (*nnn* = 50 to 200).**

Dial or type [*nnn*].

▶ **14. Save your entry.**

Select Enter. F10

▶ **15. Return to the System Programming menu.**

Select Exit twice. F5 F5

Computer Telephony Integration (CTI) Link

Release 5.0 and later supports the use of an MLX port as a Computer Telephony Integration (CTI) link. The CTI link allows applications residing on client PCs on a LAN to communicate more easily with the MERLIN LEGEND Communications System over a LAN network that has a PassageWay Telephony Server for NetWare, or CentreVu® Computer-Telephony Release 3.1 or later for Windows NT® 4.0 Server or Windows NT 4.0 Workstation.

Before programming a CTI link, refer to the *Feature Reference*, *System Planning*, and the documentation provided with the telephony platform.

The following constraints apply to programming an MLX port as a CTI link:

- CTI links cannot be used with communications systems operating in Key mode or Behind Switch mode.
- CTI link extensions cannot be programmed on tip/ring or analog multiline extension module ports. You must chose an extension that is on an MLX port module (008 MLX or 408 MLX).
- You cannot use a port reserved for an operator extension as the CTI link extension.
- You cannot use a system programming port as the CTI link extension.
- You cannot program a port as a CTI link if it has a telephone or other equipment connected to it.
- MLX modules with firmware vintage 29 do not work correctly with the CTI link. You must either choose a port on a board with firmware vintage that is not 29 or replace the module with a module that has a firmware vintage other than 29.

NOTES:

1. You should choose a module other than the one that has the system programming port so that you can still perform maintenance and system programming when the board with the CTI link extension is busied-out.
2. Be sure to busy-out the board with the CTI link before starting any programming activities.

When you add a CTI link, the system performs the following actions:

- The programmed buttons for that extension revert to the factory settings for a non-operator MLX telephone.
- Forwarding is deactivated to the extension.
- The extension is removed form membership in calling groups.
- The extension is removed from membership in coverage groups.
- The extension is removed from membership in Service Observing groups, or as an Observer of a Service Observing group.
- The Extension Directory label for the extension is changed to `CTILINK`.
- The factory setting for alarms is active on this link.
- Dial access to pools is removed from the station.

NOTES:

1. Be sure to restore the board after finishing any programming activities.
2. If the primary and secondary cover buttons are not removed, the following message appears on the programming device (SPM or MLX-20L).

```
CTI Link Extension xxxx
added, but it has
primary or secondary
cover buttons at other
extensions.
Please remove them.
Exit
```

Summary: CTI Link

Programmable by	System Manager
Mode	Hybrid/PBX
Idle Condition	Not required
Planning Form	Form 2b, System Numbering: Digital Adjuncts
Factory Setting	No port programmed as CTI link
Valid Entries	Any extension on an MLX port board except the System Programming console port and the first and fifth ports.
Inspect	Yes
Copy Option	No

Console Procedure

Busy out the board first. This is a Maintenance step. Start the procedure from the main menu, not the System Programming screen.
Menu→Maintenance→Slot→Dial the slot no.→Enter→Busy-Out→Yes

Program the CTI link:
AuxEquip→CTI Link→Dial extension no.→Enter→Exit→Exit

Restore the slot. This is a Maintenance step. Start the procedure from the main menu, not the System Programming screen.
Menu→Maintenance→Slot→Dial the slot no.→Enter→Restore→Yes

PC Procedure

Busy out the board first:
[F6]→[F2]→Type the slot no.→[F10]→[F2]→[F1]

Program the CTI link:
[F9]→[F7]→Type extension number→[F10]→[F5]→[F5]

Restore the slot. This is a Maintenance step. Start the procedure from the main menu, not the System Programming screen.
[F6]→[F2]→Dial the slot no.→[F10]→[F3]→[F1]

Procedure: CTI Link

Console Display/Instructions	Additional Information	PC
▶ **1. Select the Auxiliary Equipment menu.**		
System Programming: > Make a selection System Extensions SysRenumber Options Operator Tables LinesTrunks AuxEquip Exit NightSrvce		[F9]
▶ **2. Select CTI Link.**		
Auxiliary Equipment: Make a selection MusicOnHold VMS/AA Ldspkr Pg CTI Link Fax MaintAlarms Exit		[F7]

Console Display/Instructions	Additional Information	PC
▶ **3. Enter the extension number.**		
CTI Link: Enter extension number nnnn Delete Backspace Exit Enter	If you enter an invalid extension number you see an error screen as shown in "CTI Link Programming Errors" on page 3–309. **SP:** "Entering an Extension" Dial or type [*nnnn*].	
▶ **4. Save your entry.**		
Select Enter.		F10
▶ **5. Return to the System Programming menu.**		
Select Exit twice.		F5 F5

CTI Link Programming Errors

During the programming of the CTI link, entering an inappropriate extension number can give you an error message. This section contains displays of each screen and information about what to do if the screen appears.

System Not in Hybrid/PBX Mode

```
CTI Link Extensions:
Extension xxxx Failed.

System Not in
Hybrid/PBX Mode.

Exit
```

This message appears if the communications system is not in Hybrid/PBX mode. CTI links cannot be used with communications systems operating in Key mode or Behind Switch mode.

Not on MLX Port Module

```
CTI Link Extensions:
Extension xxxx Failed.

Not on MLX Port Module.



Exit
```

This message appears if you have chosen an extension that is not on an MLX Port Module. CTI link extensions cannot be programmed on tip/ring or analog multiline extension module ports. You must chose an extension that is on an MLX port module (008 MLX or 408 MLX).

Extension Selected Is System Programming Port

```
CTI Link Extensions:
Extension xxxx Failed.

Extension Selected is
System Programming Port.

Exit
```

This message appears if you have chosen an extension that has been programmed as a system programming port, which is not permitted as the CTI link port. You must choose another port for the CTI link extension.

NOTE:
You should choose a module other than the one that has the system programming port so that you can still perform maintenance and system programming when the board with the CTI link extension is busied-out.

MLX Port Module Contains Firmware Vintage 29

```
CTI Link Extensions:
Extension xxxx Failed.

MLX Port Module Contains
Firmware Vintage 29.

Exit
```

This message appears when the port that you are programming as the CTI link is on an MLX module with firmware vintage 29. Modules with this firmware vintage do not work correctly with the CTI link. You must either choose a port on a board with firmware vintage other than 29 or replace the module with a module that has a firmware vintage other than 29.

Port Reserved for Operator Positions

```
CTI Link Extensions:
Extension xxxx Failed.
This Port is Reserved
For Operator Positions.



Exit
```

This message appears when the port that you are programming as the CTI link is on the Operator Position list (as a QCC or DLC). Check your printout of the Operator Information Report for programmed operator positions.

Extensions Covered by Extension

```
CTI Link Extension: xxxx
added, but it has
primary or secondary
cover buttons at other
extensions.
Please remove them.
Exit
```

This message appears when the port that you are programming as the CTI link is covered by other extensions. You should remove the Cover buttons on these extensions.

Slot Not Busied-Out

```
CTI Link Extension: xxxx
not added. Please
busy out slot xx first.
If this is the only MLX
port module, use SPM for
CTI link administration
Exit
```

This message appears when the port that you are programming as the CTI link is on a board that has not been busied-out. Busy-out the board.

Optional Extension Features

The summaries in this section detail the steps in programming the following optional features:

- Extension Language
- Pool Dial-Out Code
- Calling Restrictions
- Copy Calling Restrictions
- ARS Restriction Level for Extensions
- Forced Account Code Entry
- Microphone Operation
- Authorization Codes
- Remote Call Forwarding
- Delayed Call Forwarding
- Trunk-to-Trunk Transfer
- Primary Cover Ring Delay
- Secondary Cover Ring Delay
- Group Coverage Ring Delay
- Hotline (single-line telephone only)
- Display Preference
- Service Observing

Extension Language

Use this procedure to change the language for an MLX telephone. It applies to Releases 1.1 and later only.

Summary: Extension Language

Programmable by	Users and system manager
Mode	All
Idle Condition	Not required
Planning Form	Form 4d, MLX Telephone Form 5b, Direct-Line Console (DLC): Digital Data Data Form 1b, ISDN Terminal Adapter Data Workstation
Factory Setting	English
Valid Entries	English, French, Spanish
Inspect	No
Copy Option	No
Console Procedure	To program a single extension: **More**→`Language`→`Extensions`→`Single`→Dial ext. no.→ `Enter`→Select a language→`Enter`→`Exit`→`Exit` To program a block of extensions: **More**→`Language`→`Extensions`→`Block`→ Dial starting ext. no.→`Enter`→Dial ending ext. no.→ `Enter`→Select a language→`Enter`→`Exit`→`Exit`
PC Procedure	To program a single extension: [PgUp]→[F6]→[F2]→[F1]→Type ext. no.→[F10]→ Select a language→[F10]→[F5]→[F5] To program a block of extensions: [PgUp]→[F6]→[F2]→[F2]→Type starting ext. no.→[F10]→ Type ending ext. no.→Select a language→[F10]→[F5]→[F5]

Procedure: Extension Language

Console Display/Instructions	Additional Information	PC
▶ 1. Go to the second screen of the System Programming menu.		
System Programming: > Make a selection System Extensions SysRenumber Options Operator Tables LinesTrunks AuxEquip Exit NightSrvce	Select **More**.	PgUp
▶ 2. Select Language.		
System Programming: Make a selection Labeling Language Data Print Cntr-Prg Exit		F6
▶ 3. Select Extensions.		
Language: Make a selection SystemLang Extensions SMDR Printer Exit		F2
▶ 4. Select an option.	● ◆	
Extension Language: Make a selection Single Block Exit	For a single extension, select Single and go to ● Single Extension Procedure. For a block of extensions, select Block and go to ◆ Block Procedure.	F1 F2

● Single Extension Procedure

Console Display/Instructions	Additional Information	PC
▶ 1. Enter the extension number.		

`Extension Language:`
`Enter extension number`
 	
`Backspace`
`Exit  Enter`
	If no DSS is attached:
	SP: “Entering an Extension”	

	If DSS is attached: Toggle the red LED on or off as required. Go to Step 6. On = extension language is French Off = extension language is English Flashing = extension language is Spanish	
▶ 2. Save your entry.		
Select `Enter`.		F10
▶ 3. Specify the language for the extension.		

`Extension xxxx Language:`
`Select one`
`English`
`French`
`Spanish`
`Next`
`Exit  Enter`
	xxxx = extension entered in Step 1	

	Select `English`, `French`, or `Spanish`.	F1 F2 F3
▶ 4. Continue to assign the language to additional extensions or go to Step 5.		
Select `Next`.		F9
	Return to Step 3 to continue programming. The next extension is displayed on Line 1.	
▶ 5. Save your entry.		
Select `Enter`.		F10
▶ 6. Return to the System Programming menu.		
Select `Exit` two times.		F5 F5

◆ Block Procedure

Console Display/Instructions	Additional Information	PC
▶ 1. Enter the starting extension number.		

`Extension Language:`
`Enter starting extension`
 	
`Backspace`
`Exit  Enter`
	SP: “Entering an Extension”	

▶ 2. Save your entry.		
Select `Enter`.		F10
▶ 3. Enter the ending extension number.		

`Lang for ext` *xxxx* `to:`
`Enter ending extension`
 	
`Backspace  Next`
`Exit  Enter`
	xxxx = extension entered in Step 1
	
	SP: “Entering an Extension”	

▶ 4. Save your entry.		
Select `Enter`.		F10
▶ 5. Specify the language for the extensions.		

`Lang Exts` *xxxx* `to` *xxxx*`:`
`Select one`
`English`
`French`
`Spanish`
 	
`Exit  Enter`
	xxxx to *xxxx* = range of extensions entered in Steps 1 and 3
	
	Select `English`,
	`French`, or
	`Spanish`.
		
		F1
		F2
		F3

▶ 6. Save your entry.		
Select `Enter`.		F10
▶ 7. Return to the System Programming menu.		
Select `Exit` twice.		F5 F5

Pool Dial-Out Code

Use this procedure to allow or restrict dialing pool dial-out codes and the placing of calls on specific line/trunk pools. Beginning with Release 3.1, the factory settings restrict all extensions from dialing any line/trunk pool dial-out code.

NOTE:
Prior to Release 3.1, the factory settings allow all extensions to dial any line/trunk pool dial-out code. Entering a pool dial-out code and then deleting that code restricts the user from using the pool associated with the entered code.

SECURITY ALERT:
In Release 6.0 and later systems (Hybrid/PBX mode only), do not allow dial access to pools of non-local tie or PRI tandem trunks. When callers in your system need to use these pools for outside calls, use ARS to direct the calls to these pools. Callers in your system use normal inside calling procedures to reach extensions on private networked systems.

Summary: Pool Dial-Out Code

Programmable by	System Manager
Mode	Hybrid/PBX
Idle Condition	Extension idle
Planning Form	Form 4b, Analog Multiline Telephone Form 4d, MLX Telephone Form 4e, MFM Adjunct: MLX Telephone Form 4f, Tip/Ring Equipment Form 5a, Direct-Line Console (DLC): Analog Form 5b, Direct-Line Console (DLC): Digital Form 5c, MFM Adjunct (DLC): Digital Form 5d, Queued Call Console (QCC) Data Form 1a, Modem Data Workstation Data Form 1b, ISDN Terminal Adapter Data Workstation
Factory Setting	Main pool: 70; All other pools: 890 to 899. All telephones are restricted from dialing any pool dial-out code.
Valid Entries	Pool numbers
Inspect	Yes
Copy Option	No
Console Procedure	`Extensions`→`Dial OutCd`→Dial ext. no.→`Enter`→ Dial pool dial-out code→`Enter`→`Exit`→`Exit`
PC Procedure	[F6]→[F3]→Type ext. no.→[F10]→Type pool dial-out code→[F10]→[F5]→[F5]

Procedure: Pool Dial-Out Code

Console Display/Instructions	Additional Information	PC
1. Select the Extensions menu.		
System Programming: > Make a selection System Extensions SysRenumber Options Operator Tables LinesTrunks AuxEquip Exit NightSrvce		F6
2. Select Dial-Out Code.		
Extensions: > Make a selection LinesTrunks RestrctCopy Line Copy Account Dial Outcd BIS/HFAI Restriction Call Pickup Exit VoiceSignl		F3
3. Specify the extension.		
Assign Pool DialOut Cd: Enter extension Backspace Exit Enter	**If no DSS is attached:** **SP:** “Entering an Extension” **If DSS is attached:** Toggle the red LED on or off as required. Go to Step 5. On = pool dial-code is assigned Off = pool dial-code is not assigned	
4. Save your entry.		
Select Enter.		F10
	If you get the Station Busy message, wait for an idle condition or exit system programming and try again later.	

Console Display/Instructions	Additional Information	PC
▶ 5. Enter the pool dial-out code.		
Extension *xxxx*: Enter pool dialout code Delete Backspace Next Exit Enter	*xxxx* = extension entered in Step 3 Dial or type [*nnn*].	 ↵
▶ 6. Allow or restrict the extension from using the pool dial-out code.		
Select Enter or Delete.		F10 F8
	You may continue to allow or restrict additional pool dial-out codes from this extension by repeating Steps 5 and 6.	
▶ 7. Continue to program pool dial-out codes for another extension or go to Step 8.		
Select Next.		F9
	Return to Step 5 to continue programming. The next extension is displayed on Line 1.	
▶ 8. Return to the System Programming menu.		
Select Exit two times.		F5 F5

Calling Restrictions

Use this procedure to change individual extension calling restrictions to one of the following:

- Unrestricted
- Restricted from making all outgoing calls
- Restricted from making toll calls

SECURITY ALERT:
Toll fraud can occur if extensions are not properly restricted. See "Security of Your System: Preventing Toll Fraud" on page A–9 in Appendix A for more information and security procedures.

NOTE:
In Release 6.0 and later systems, outward and toll calling restrictions are automatically removed when a caller dials an extension in the non-local dial plan. FRL restrictions still apply. For details, see "Uniform Dial Plan Routing" on page 3–565.

Summary: Calling Restrictions

Programmable by	System Manager
Mode	All
Idle Condition	Extension idle
Planning Form	Form 4b, Analog Multiline Telephone Form 4d, MLX Telephone Form 4e, MFM Adjunct: MLX Telephone Form 4f, Tip/Ring Equipment Form 5a, Direct-Line Console (DLC): Analog Form 5b, Direct-Line Console (DLC): Digital Form 5c, MFM Adjunct: DLC Form 5d, Queued Call Console (QCC) Data Form 1a, Modem Data Workstation Data Form 1b, ISDN Terminal Adapter Data Workstation
Factory Setting	Unrestricted
Valid Entries	Unrestricted, Outward restricted, Toll restricted
Inspect	No
Copy Option	Yes
Console Procedure	`Extensions`→`Restriction`→Dial ext. no.→`Enter`→ Select restriction→`Enter`→`Exit`
PC Procedure	[F6]→[F4]→Type ext. no.→[F10]→Select restriction→[F10]→[F5]

Procedure: Calling Restrictions

Console Display/Instructions	Additional Information	PC
▶ **1. Select the Extensions menu.**		
System Programming: > Make a selection System Extensions SysRenumber Options Operator Tables LinesTrunks AuxEquip Exit NightSrvce		F6
▶ **2. Select Restrictions.**		
Extensions: > Make a selection LinesTrunks RestrctCopy Line Copy Account Dial OutCd BIS/HFAI Restriction Call Pickup Exit VoiceSignl		F4
▶ **3. Specify the extension.**		
Call Restriction: Enter extension Backspace Exit Enter	**SP:** “Entering an Extension”	
▶ **4. Save your entry.**		
Select **Enter**.		F10
	If you get the Station Busy message, wait for an idle condition or exit system programming and try again later.	

Console Display/Instructions **Additional Information** **PC**

▶ **5. Select the appropriate restriction.**

```
Extension xxxx:
Select one
Unrestricted
Outward Restrict
Toll Restrict
                Next
Exit            Enter
```

xxxx = number entered in Step 3

`Unrestricted` = remove all restrictions. F1
`Outward Restrict` = restrict extension from making outside calls (local and toll). F2
`Toll Restrict` = restrict extension from making toll calls. F3

Press the button or function key next to your selection.

▶ **6. Continue to assign or remove restrictions from another extension or go to Step 7.**

Select `Next`. F9

Return to Step 5 to continue programming. The next extension is displayed on Line 1.

▶ **7. Save your entry.**

Select `Enter`. F10

▶ **8. Return to the System Programming menu.**

Select `Exit`. F10

Copy Calling Restrictions

Use this procedure to copy calling restrictions, allowed lists, and disallowed lists. Feature assignment must be completed for the “copy from” extension. These features can then be copied to an individual extension or block of extensions with identical calling restriction requirements.

If you are copying restrictions to a block of extensions and one of the extensions in the block is in use, the display shows the `Station Busy - Pls Wait` message. Copying for the rest of the extensions in the block is delayed until the busy extension becomes idle. The number of the busy extension is not shown. If a DSS is attached, the LED associated with the busy extension is on. If you exit instead of waiting for the busy extension to become idle, copying for the rest of the extensions in the block is canceled; however, the restrictions that have already been copied are not canceled.

If you are copying restrictions to a block of extensions, they must be sequentially numbered.

The extensions you are copying to and from can be both operator and nonoperator positions.

NOTE:
Dial-out code restrictions are not copied.

Summary: Copy Calling Restrictions

Programmable by	System Manager
Mode	All
Idle Condition	“Copy to” extension(s) idle
Planning Form	Form 4b, Analog Multiline Telephone Form 4d, MLX Telephone Form 4e, MFM Adjunct: MLX Telephone Form 5a, Direct-Line Console (DLC): Analog Form 5b, Direct-Line Console (DLC): Digital Form 5c, MFM Adjunct: DLC Form 5d, Queued Call Console (QCC) Data Form 1a, Modem Data Workstation Data Form 1b, ISDN Terminal Adapter Data Workstation
Factory Setting	Not applicable
Valid Entries	Not applicable
Inspect	No
Copy Option	Not applicable

Console Procedure	To copy to a single extension:
	`Extensions`→`RestrctCopy`→`Single`→Dial copy from ext. no.→`Enter`→Dial copy to ext. no.→ `Enter`→ `Exit`→`Exit`→`Exit`
	
	To copy to a block of extensions:
	`Extensions`→`RestrctCopy`→`Block`→Dial copy from ext. no.→`Enter`→Dial first no. in copy to block→`Enter`→ Dial last no. in copy to block→`Enter`→`Exit`→`Exit`→`Exit`

PC Procedure	To copy to a single extension: [F6]→[F6]→[F1]→Type copy from ext. no.→[F10]→ Type copy to ext. no.→[F10]→[F5]→[F5]→[F5] To copy to a block of extensions: [F6]→[F6]→[F2]→Type copy from ext. no.→[F10]→ Type first copy no. in copy to block→[F10]→[F5]→[F5]→[F5]

Procedure: Copy Calling Restrictions

Console/Display Instructions	Additional Information	PC

▶ 1. Select the Extensions menu.

```
System Programming:      >
Make a selection
System          Extensions
SysRenumber     Options
Operator        Tables
LinesTrunks     AuxEquip
Exit            NightSrvce
```

F6

▶ 2. Select Restrict Copy.

```
Extensions:              >
Make a selection
LinesTrunks     RestrctCopy
Line Copy       Account
Dial OutCd      BIS/HFAI
Restriction     Call Pickup
Exit            VoiceSignl
```

F6

▶ 3. Specify whether to copy calling restrictions to ● ◆ an individual extension or to a block of extensions.

```
Copy Restrictions:
Make a selection
Single
Block

Exit
```

If you select Single, go to ● Single Extension Procedure. F1

If you selected Block, go to ◆ Block Procedure. F2

● Single Extension Procedure

Console Display/Instructions **Additional Information** **PC**

▶ **1. Specify the extension from which you want to copy calling restrictions.**

```
Restriction Copy:
Enter extension to copy
from


Backspace
Exit            Enter
```

SP: “Entering an Extension”

▶ **2. Save your entry.**

Select Enter. F10

▶ **3. Specify the extension to which you want to copy calling restrictions.**

```
Copy extension xxxx to:
Enter extension


Backspace       Next
Exit            Enter
```

xxxx = extension number entered in Step 4

SP: “Entering an Extension”

▶ **4. Continue to copy calling restrictions from another extension to an individual extension or go to Step 3.**

Select Next. F9

Return to Step 3 to continue programming. The next extension is displayed on Line 1.

▶ **5. Save your entry.**

Select Enter. F10

▶ **6. Return to the System Programming menu.**

Select Exit three times. F5 F5 F5

◆ Block Procedure

Console Display/Instructions	Additional Information	PC
▶ **1. Specify the extension from which you want to copy calling restrictions.**		
Restriction Copy: Enter extension to copy from Backspace Exit Enter	**SP:** “Entering an Extension”	
▶ **2. Save your entry.**		
Select Enter.		F10
▶ **3. Enter the logical ID of the first extension in the block to which you want to copy calling restrictions (*nnn* = 1 to 144).**		
Copy extension *xxxx* To: Enter starting extension Logical id (1 - 144) Backspace Exit Enter	*xxxx* = extension entered in Step 4 Dial or type # [*nnn*].	
▶ **4. Save your entry.**		
Select Enter.		F10
▶ **5. Enter the logical ID of the last extension in the block (*nnn* = 1 to 144).**		
Start at extension *xxxx*: Enter ending extension Logical id (1 - 144) Backspace Exit Enter	*xxxx* = extension entered in Step 1 Dial or type # [*nnn*].	
▶ **6. Save your entry.**		
Select Enter.		F10
▶ **7. Return to the System Programming menu.**		
Select Exit three times.		F5 F5 F5

ARS Restriction Level for Extensions

Use this procedure to assign an ARS restriction level to an extension. Outgoing calls can be made only to routes that have a Facility Restriction Level (FRL) lower than or equal to that of the extension for which the call is being made. Only outgoing calls are affected; users can receive inside, local, and toll calls on restricted telephones and can join any type of call in progress.

The restriction level assigned to extensions is opposite to the FRL assigned to routes, where 0 is the most and 6 is the least restrictive.

In Release 6.0 and later systems, FRLs assigned to extensions apply not only to ARS calls but also to calls for non-local dial plan extensions connected by private trunks to your local system. For this reason, use care in assigning FRLs both to extensions and to UDP routes. For example, if a user must be restricted from toll calls on your local system, you may need to plan UDP routes' FRLs to allow the user to reach necessary non-local dial plan extensions. For details, see "Uniform Dial Plan Routing" on page 3–565.

Summary: Assigning ARS Restriction Level For an Extension

Programmable by	System Manager
Mode	Hybrid/PBX only
Idle Condition	Not required
Planning Form	Form 4b, Analog Multiline Telephone Form 4d, MLX Telephone Form 4e, MFM Adjunct: MLX Telephone Form 4f, Tip/Ring Equipment Form 5a, Direct-Line Console (DLC): Analog Form 5b, Direct-Line Console (DLC): Digital Form 5c, MFM Adjunct: DLC Form 6g, Call Restriction Assignments and Lists
Factory Setting	3
Valid Entries	0–6, (0 is most restrictive and 6 is least restrictive)
Inspect	No
Copy Option	No
Console Procedure	`Extensions`→**More**→`ARS Restrict`→Dial ext. no.→`Enter`→**Drop**→Dial restriction level→`Enter`→`Exit`
PC Procedure	[F6]→[PgUp]→[F6]→Type ext. no.→[F10]→[Alt] + [P]→Type restriction level→[F10]→[F5]

Procedure: Assigning ARS Restriction Level For an Extension

Console Display/Instructions	Additional Information	PC
1. Select the Extensions menu.		
System Programming: > Make a selection System Extensions SysRenumber Options Operator Tables LinesTrunks AuxEquip Exit NightSrvce		F6
2. Go to the second screen of the Extensions menu.		
Extensions: > Make a selection LinesTrunks RestrctCopy Line Copy Account Dial OutCd BIS/HFAI Restriction Call Pickup Exit VoiceSignl	Press **More.**	PgUp
3. Select ARS Restrict.		
Extensions: > Make a selection Ext Status ARS Restrct Group Page Mic Disable Group Cover Remote Frwd Grp Calling Auth Code Exit Delay Frwd		F6
4. Specify the extension.		
ARS Restrict: Enter extension Backspace Exit Enter	**SP:** “Entering an Extension”	
5. Save your entry.		
Select Enter.		F10

Console Display/Instructions	Additional Information	PC

▶ 6. Erase the current Restriction Level (x).

```
Extension xxxx:
Enter ARS restrict level
(0-6)
x

Backspace        Next
Exit             Enter
```

xxxx = extension entered in Step 4

Press **Drop**. Alt + P

▶ 7. Enter the restriction level (*n* = 0 to 6).

```
Extension xxxx:
Enter ARS restrict level
(0-6)
x

Backspace        Next
Exit             Enter
```

xxxx = extension entered in Step 4

Dial or type [*n*].

▶ 8. Continue to assign restriction levels to additional extensions or go to Step 9.

Select Next. F9

Return to Step 7 to continue programming. The next extension is displayed on Line 1.

▶ 9. Save your entry.

Select Enter. F10

▶ 10. Return to the System Programming menu.

Select Exit. F5

Forced Account Code Entry

Use this procedure to assign or remove Forced Account Code Entry. When this feature is programmed on individual extensions, the user must enter a 1- to 16-digit account code before making an outside call.

Summary: Forced Account Code Entry

Programmable by	System Manager
Mode	All
Idle Condition	Not required
Planning Form	Form 4b, Analog Multiline Telephone Form 4d, MLX Telephone Form 4e, MFM Adjunct: MLX Telephone Form 4f, Tip/Ring Equipment Form 5a, Direct-Line Console (DLC): Analog Form 5b, Direct-Line Console (DLC): Digital Form 5c, MFM Adjunct: DLC Form 5d, Queued Call Console (QCC) Data Form 1a, Modem Data Workstation Data Form 1b, ISDN Terminal Adapter Data Workstation
Factory Setting	Not assigned
Valid Entries	Assigned, not assigned
Inspect	Yes
Copy Option	No
Console Procedure	`Extensions`→`Account`→Toggle LED On/Off or Dial ext. no.→`Enter`→`Exit`→`Exit`
PC Procedure	F6 → F7 →Toggle letter R On/Off or Type ext. no.→ F10 → F5 → F5

Procedure: Forced Account Code Entry

Console Display/Instructions	Additional Information	PC
▶ **1. Select the Extensions menu.**		

`System Programming: >`
`Make a selection`
`System Extensions`
`SysRenumber Options`
`Operator Tables`
`LinesTrunks AuxEquip`
`Exit NightSrvce`
		F6

Console Display/Instructions **Additional Information** **PC**

▶ 2. Select Forced Account Code Entry.

```
Extensions:              >
Make a selection
LinesTrunks      RestrctCopy
Line Copy        Account
Dial OutCd       BIS/HFAI
Restriction      Call Pickup
Exit             VoiceSignl
```

F7

▶ 3. Specify the extension.

```
Forced Account Code:
Enter extensions


                 Delete
Backspace
Exit             Enter
```

If no DSS is attached:
SP: “Entering an Extension”

If DSS is attached:
Toggle the red LED on or off as required. Go to Step 5.
On = forced account code entry is assigned to extension.
Off = forced account code entry is not assigned to extension.

▶ 4. Assign or remove the forced account code entry from the extension entered in Step 3.

Select Enter or F10
Delete. F8

You may continue to assign or remove forced account code entry from additional extensions by repeating Steps 3 and 4.

▶ 5. Return to the System Programming menu.

Select Exit twice. F5 F5

Microphone Operation

Use this procedure to enable or disable microphones on MLX telephones (except QCC operator positions). When the microphone is disabled, users cannot use the speakerphone to conduct conversations.

NOTE:
The microphone cannot be disabled on analog multiline telephones or on MLX telephones used as QCC operator positions.

Summary: Microphone Operation

Programmable by	System Manager
Mode	All
Idle Condition	Not required
Planning Form	Form 4d, MLX Telephone Form 5b, Direct-Line Console (DLC): Digital
Factory Setting	Enabled
Valid Entries	Enabled, Disabled
Inspect	Yes
Copy Option	No
Console Procedure	Extensions→**More**→Mic Disable→Toggle LED On/Off or Dial ext. no.→Enter→Exit→Exit
PC Procedure	F6 → PgUp → F7 →Toggle letter R On/Off or Type ext. no.→ F10 → F5 → F5

Procedure: Microphone Operation

Console Display/Instructions	Additional Information	PC
1. Select the Extensions menu		
System Programming: > Make a selection System Extensions SysRenumber Options Operator Tables LinesTrunks AuxEquip Exit NightSrvce		F6

Console Display/Instructions **Additional Information** **PC**

▶ 2. Go to the second screen of the Extensions menu.

```
Extensions:              >
Make a selection
LinesTrunks      RestrctCopy
Line Copy        Account
Dial OutCd       BIS/HFAI
Restriction      Call Pickup
Exit             VoiceSignl
```

Press **More**. PgUp

▶ 3. Select Microphone Disable.

```
Extensions:              >
Make a selection
Ext Status       ARS Restrct
Group Page       Mic Disable
Group Cover      Remote Frwd
Grp Calling      Auth Code
Exit             Delay Frwd
```

F7

▶ 4. Specify the extension.

```
Microphone Disable:
Enter extension


                 Delete
Backspace
Exit             Enter
```

If no DSS is attached:
SP: “Entering an Extension”

If DSS is attached:
Toggle the red LED on or off as required. Go to Step 6.
On = microphone operation is assigned to extension.
Off = microphone operation is not assigned to extension.

▶ 5. Assign or remove microphone operation from the extension entered in Step 4.

Select Enter or F10
Delete. F8

You may continue to assign or remove microphone operation from additional extensions by repeating Steps 4 and 5.

▶ 6. Return to the System Programming menu.

Select Exit twice. F5 F5

Authorization Codes

The Authorization Code feature allows you to pick up someone else's telephone, enter your authorization code, and complete a call with the restrictions that apply to your own telephone (*home extension*). This includes toll restrictions, outward restriction, FRL, Allowed Lists, Disallowed Lists, Forced Account Code Entry (FACE), Night Service Exclusion List, and Dial Access to Pools.

NOTE:
In Release 6.0 and later systems, a user can activate Call Forwarding and Remote Call Forwarding by entering his or her home extension authorization code while at any telephone in the system; this is useful when activating Call Forwarding or Remote Call Forwarding at phantom stations. It is also useful when a single-line telephone extension needs a PAUSE character in the Remote Call Forwarding digit string.

Use this procedure to assign or remove an authorization code to an extension. The authorization code can range from 2 to 11 characters (0 - 9, ∗) and must be unique for each extension. An authorization code cannot begin with an "∗."

If you are assigning authorization codes for a group of sequential extensions, begin programming the lowest extension number to take advantage of the Next screen key (see "Standard Procedures").

Summary: Authorization Codes

Programmable by	System Manager
Mode	All
Idle Condition	Not required
Planning Form	Form 6h, Authorization Codes
Factory Setting	Not assigned
Valid Entries	2–11 characters (0–9, ∗)
Inspect	Yes
Copy Option	No
Console Procedure	Extensions→**More**→Auth Code→Dial ext. no.→Enter→ Dial authorization code→Enter→Exit→Exit
PC Procedure	F6→PgUp→F9→Type ext. no.→F10→ Type authorization code→F10→F5→F5

Procedure: Authorization Codes

Console Display/Instructions	Additional Information	PC

▶ 1. Select the Extensions menu.

```
System Programming:      >
Make a selection
System          Extensions
SysRenumber     Options
Operator        Tables
LinesTrunks     AuxEquip
Exit            NightSrvce
```

F6

▶ 2. Go to the second screen of the Extensions menu.

```
Extensions:              >
Make a selection
LinesTrunks     RestrctCopy
Line Copy       Account
Dial OutCd      BIS/HFAI
Restriction     Call Pickup
Exit            VoiceSignl
```

Press **More**. PgUp

▶ 3. Select Authorization Code.

```
Extensions:              >
Make a selection
Ext Status      ARS Restrct
Group Page      Mic Disable
Group Cover     Remote Frwd
Grp Calling     Auth Code
Exit            Delay Frwd
```

F9

▶ 4. Specify the extension.

```
Authorization Code:
Enter extension



Backspace       Next
Exit            Enter
```

SP: “Entering an Extension”

▶ 5. Save your entry.

Select Enter. F10

Console Display/Instructions	Additional Information	PC
▶ **6. Erase the current authorization code (*xxxxxxxxxxx*).**		
Extension *xxxx*: Enter Authorization Code (2-11 digits, 0-9, *) *xxxxxxxxxxx* Backspace Next Exit Enter	*xxxx* = extension entered in Step 4 Press **Drop**.	Alt + P
▶ **7. Enter the Authorization Code.**		
Extension *xxxx*: Enter Authorization Code (2-11 digits, 0-9, *) *xxxxxxxxxxx* Backspace Next Exit Enter	Dial or type the authorization code: Use backspace to delete the last digit entered.	
▶ **8. Save your entry.**		
Select Enter or		F10
Next to save your entry and assign an authorization code to the next extension in a sequence. Return to Step 6.		F9
▶ **9. Return to the System Programming menu.**		
Select Exit twice.		F5 F5

Remote Call Forwarding

Use this procedure to allow or disallow the Remote Call Forwarding capability, which permits users to forward calls to an outside number. In Release 6.0 and later systems, Remote Call Forwarding must be enabled in order for an extension user to activate Centrex Transfer via Remote Call Forwarding. In a Release 6.0 private network, Remote Call Forwarding may be used to forward calls across the private network.

If an extension with Remote Call Forwarding has one or more personal lines assigned, that extension can be assigned as the principal user, and calls received on that line are forwarded to outside numbers. See "Principal User for Personal Line" on page 70.

NOTES:

1. This feature is not recommended unless you have ground-start trunks. See "Disconnect Signaling Reliability" on page 3–61 and "Hold Disconnect Interval" on page 3–67.
2. Ensure that the number of rings for Remote Call Forwarding is less than the Coverage Delay or call will not forward.
3. In Release 6.1 and later systems, use the Forwarding feature.

SECURITY ALERT:
See "Security of Your System: Preventing Toll Fraud" on page A–9 in Appendix A for more information and security procedures on preventing toll fraud with Remote Call Forwarding.

Summary: Remote Call Forwarding

Programmable by	System Manager
Mode	All
Idle Condition	Not required
Planning Form	Form 4b, Analog Multiline Telephone Form 4d, MLX Telephone Form 4e, MFM Adjunct: MLX Telephone Form 4f, Tip/Ring Equipment Form 5a, Direct-Line Console (DLC): Analog Form 5b, Direct-Line Console (DLC): Digital Form 5c, MFM Adjunct: DLC Form 5d, Queued Call Console (QCC) Data Form 1a, Modem Data Workstation Data Form 1b, ISDN Terminal Adapter Data Workstation
Factory Setting	Disallowed
Valid Entries	Disallowed, allowed

Inspect	Yes
Copy Option	No
Console Procedure	Extensions→**More**→Remote Frwd→Toggle LED On/Off or Dial ext. no.→Enter→Exit→Exit
PC Procedure	F6→PgUp→F8→Toggle letter R On/On/Off or type ext. no.→F10→F5→F5

Procedure: Remote Call Forwarding

Console Display/Instructions	Additional Information	PC

1. Select the Extensions menu.

```
System Programming:      >
Make a selection
System          Extensions
SysRenumber     Options
Operator        Tables
LinesTrunks     AuxEquip
Exit            NightSrvce
```

F6

2. Go to the second screen of the Extensions menu.

```
Extensions:              >
Make a selection
LinesTrunks     RestrctCopy
Line Copy       Account
Dial OutCd      BIS/HFAI
Restriction     Call Pickup
Exit            VoiceSignl
```

Press **More.** PgUp

3. Select Remote Call Forward.

```
Extensions:              >
Make a selection
Ext Status      ARS Restrct
Group Page      Mic Disable
Group Cover     Remote Frwd
Grp Calling     Auth Code
Exit            Delay Frwd
```

F8

Console/Display Instructions **Additional Information** **PC**

▶ 4. Specify the extension.

```
Remote Call Forward:
Enter extension

                Delete
Backspace
Exit            Enter
```

If no DSS is attached:
SP: “Entering an Extension”

If DSS is attached:
Toggle the red LED on or off as required. Go to Step 6.
On = remote call forwarding is assigned to extension
Off = remote call forwarding is not assigned to extension

▶ 5. Assign or remove remote call forwarding from the extension entered in Step 4.

Select Enter or F10
Delete. F8

You may assign or remove remote call forwarding from additional extensions by repeating Steps 4 and 5.

▶ 6. Return to the System Programming menu.

Select Exit twice. F5 F5

Delayed Call Forwarding

Delayed Call Forwarding allows a user to answer or screen a call arriving at an extension before the call is forwarded through Call Forwarding, Remote Call Forwarding, or Follow Me. The forwarding delay is the number of rings before the call is forwarded. This delay can range from 0 to 9 rings. If the forwarding delay is set to 0, the call is forwarded immediately. Delayed Call Forwarding is available only in Release 4.0 and later.

NOTE:
When Do Not Disturb is activated at an extension, it overrides Delayed Call Forwarding and the call is forwarded immediately.

Use this procedure to assign or remove Delayed Call Forwarding from an extension. If you are assigning Delayed Call Forwarding to a group of sequential extensions, begin by programming the lowest extension number to take advantage of the `Next` screen key (see “Standard Procedures”).

Summary: Delayed Call Forwarding

Programmable by	System Manager
Mode	All
Idle Condition	Not required
Planning Form	Form 4b, Analog Multiline Telephone Form 4d, MLX Telephone Form 4e, MFM Adjunct: MLX Telephone Form 4f, Tip/Ring Equipment Form 5a, Direct-Line Console (DLC): Analog Form 5b, Direct-Line Console (DLC): Digital Form 5c, MFM Adjunct: DLC Form 5d, Queued Call Console (QCC) Data Form 1a, Modem Data Workstation Data Form 1b, ISDN Terminal Adapter Data Workstation
Factory Setting	0 rings
Valid Entries	0 - 9 rings
Inspect	Yes
Copy Option	No
Console Procedure	`Extensions`→**More**→`Delay Frwd`→Dial ext. no.→ `Enter`→**Drop**→Dial no. of delay rings→`Enter`→ `Exit`→`Exit`
PC Procedure	[F6]→[PgUp]→[F10]→Type ext. no.→[F10]→[Alt]+[P]→ Type no. of delay rings→[F10]→[F5]→[F5]

Procedure: Delayed Call Forwarding

Console Display/Instructions	Additional Information	PC
▶ **1. Select the Extensions menu.**		
System Programming: > Make a selection System Extensions SysRenumber Options Operator Tables LinesTrunks AuxEquip Exit NightSrvce		F6
▶ **2. Go to the second screen of the Extensions menu.**		
Extensions: > Make a selection LinesTrunks RestrctCopy Line Copy Account Dial OutCd BIS/HFAI Restriction Call Pickup Exit VoiceSignl	Press **More**.	PgUp
▶ **3. Select Authorization Code.**		
Extensions: > Make a selection Ext Status ARS Restrct Group Page Mic Disable Group Cover Remote Frwd Grp Calling Auth Code Exit Delay Frwd		F10
▶ **4. Specify the extension.**		
Delay Frwd: Enter extension Backspace Exit Enter	**SP:** “Entering an Extension”	
▶ **5. Save your entry.**		
Select Enter.		F10

Console/Display Instructions	Additional Information	PC
▶ **6. Erase the current number of delay rings (x).**		
Extension *xxxx*: Enter Delay Rings (0-9) *x* Backspace Next Exit Enter	*xxxx* = extension entered in Step 4	
	Press **Drop** or **Backspace**.	Alt + P F4
▶ **7. Enter the number of delay rings.**		
Extension *xxxx*: Enter Delay Rings (0-9) *x* Backspace Next Exit Enter	Dial or type the number of delay rings: You may use backspace to delete the last digit entered.	
▶ **8. Save your entry.**		
Select Enter or Next.		F10 F9
	If you select Next to assign a forwarding delay to the next extension in a sequence, repeat Steps 6 and 7.	
▶ **9. Return to the System Programming menu.**		
Select Exit twice.		F5 F5

Trunk-to-Trunk Transfer

Use this procedure to enable or disable trunk-to-trunk transfer at an extension. When trunk-to-trunk transfer is disabled, users cannot transfer an outside call to an outside line.

NOTE:
In Release 6.0 and later systems (Hybrid/PBX mode only), calls can be transferred to members in the non-local dial plan tables, even if trunk-to-trunk transfer is not allowed. This allows users of single-line telephones to transfer incoming calls from the PSTN to non-local dial plan extensions.

Summary: Trunk-to-Trunk Transfer

Programmable by	System Manager
Mode	All
Idle Condition	Not required
Planning Form	Form 4b, Analog Multiline Telephone Form 4d, MLX Telephone Form 4e, MFM Adjunct: MLX Telephone Form 4f, Tip/Ring Equipment Form 5a, Direct-Line Console (DLC): Analog Form 5b, Direct-Line Console (DLC): Digital Form 5c, MFM Adjunct: DLC Form 5d, Queued Call Console (QCC) Data Form 1a, Modem Data Workstation Data Form 1b, ISDN Terminal Adapter Data Workstation
Factory Setting	Disabled
Valid Entries	Enabled, Disabled
Inspect	Yes
Copy Option	No
Console Procedure	Extensions→**More**→**More**→TrkTransfer→ Toggle LED On/Off or Dial ext. no.→Enter→Exit→Exit
PC Procedure	F6 →PgUp →PgUp →F1 →Toggle letter R On/Off or Type ext. no.→F10 →F5 →F5

Procedure: Trunk-to-Trunk Transfer

Console Display/Instructions	Additional Information	PC
▶ **1. Select the Extensions menu.**		
System Programming: > Make a selection System Extensions SysRenumber Options Operator Tables LinesTrunks AuxEquip Exit NightSrvce		F6

Console Display/Instructions **Additional Information** **PC**

▶ 2. Go to the third screen of the Extensions menu.

```
Extensions:              >
Make a selection
LinesTrunks      RestrctCopy
Line Copy        Account
Dial OutCd       BIS/HFAI
Restriction      Call Pickup
Exit             VoiceSignl
```

Press **More** twice. PgUp PgUp

▶ 3. Select Trunk to Trunk Transfer.

```
Extensions:              >
Make a selection
TrkTransfer      ServiceObs
Cover Delay
HotLine
DisplayPref
Exit
```

F1

▶ 4. Specify the extension.

```
Trunk to Trunk Transfer:
Enter extension


                 Delete
Backspace
Exit             Enter
```

If no DSS is attached:
SP: “Entering an Extension”

If DSS is attached:
Toggle the red LED on or off as required. Go to Step 6.
On = trunk-to-trunk transfer is enabled.
Off = trunk-to-trunk transfer is disabled.

▶ 5. Assign or remove trunk-to-trunk transfer from the extension entered in Step 4.

Select `Enter` to allow trunk-to-trunk transfer or F10
`Delete` to disallow trunk-to-trunk transfer. F8

You may continue to assign or remove trunk-to-trunk transfer from additional extensions by repeating Steps 4 and 5.

▶ 6. Return to the System Programming menu.

Select `Exit` twice. F5 F5

Primary Cover Ring Delay

The Primary Cover Ring Delay option replaces the Delay Ring Interval programmed on a systemwide basis in releases prior to Release 4.1.

Use this procedure to specify the following:

- The delay before a Primary Cover button programmed for Delay Ring begins to ring audibly
- The delay in addition to the Group Coverage Ring Delay before sending calls to Group Coverage when the sender has Primary or Secondary Coverage *and* any receiver is available

The Primary Cover Ring Delay is programmed for each sender's extension.

Summary: Primary Cover Ring Delay

Programmable by	System Manager
Mode	All
Idle Condition	Not required
Planning Form	Form 4b, Analog Multiline Telephone Form 4d, MLX Telephone Form 4e, MFM Adjunct: MLX Telephone Form 4f, Tip/Ring Equipment Form 5a, Direct-Line Console (DLC): Analog Form 5b, Direct-Line Console (DLC): Digital Form 5c, MFM Adjunct: DLC
Factory Setting	2 rings
Valid Entries	1–6 rings
Inspect	No
Copy Option	No
Console Procedure	`Extensions`→**More**→**More**→`Cover Delay`→`Primary`→ Dial sender's extension→`Enter`→Dial no. of rings (1–6)→ `Enter`→`Exit`
PC Procedure	[F6]→[PgUp]→[PgUp]→[F2]→[F1]→Type sender's extension→[F10]→Type no. of rings (1–6)→[F10]→[F5]

Procedure: Primary Cover Ring Delay

Console Display/Instructions	Additional Information	PC
1. Select the Extensions menu.		
System Programming: > Make a selection System Extensions SysRenumber Options Operator Tables LinesTrunks AuxEquip Exit NightSrvce		F6
2. Go to the third screen of the Extensions menu.		
Extensions: > Make a selection LinesTrunks RestrctCopy Line Copy Account Dial OutCd BIS/HFAI Restriction Call Pickup Exit VoiceSignl	Press **More** twice.	PgUp PgUp
3. Select Cover Delay.		
Extensions: > Make a selection TrkTransfer ServiceObs Cover Delay HotLine DisplayPref Exit		F1
4. Select Primary.		
Cover Delay Make a selection Primary Secondary Group Cover Exit Enter		F1

Console Display/Instructions **Additional Information** **PC**

▶ **5. Specify the sender's extension.**

```
Prmary Ring Delay:
Enter extension



Backspace
Exit            Enter
```

If no DSS is attached:
SP: "Entering an Extension"

If DSS is attached:
Toggle the red LED on or
off as required. Go to Step 6.
On = trunk-to-trunk transfer is enabled.
Off = trunk-to-trunk transfer is disabled.

▶ **6. Save your entry.**

Select Enter. F10

▶ **7. Erase the current number of rings (*xx*).**

```
Prim Cov Delay Ext xxxx:
Enter number rings (1-6)

x

Backspace       Next
Exit            Enter
```

xxxx = number entered in Step 5

Press **Drop**. Alt + P

▶ **8. Enter the number of rings before the call goes to Primary Coverage (*n = 1 to 6).***

Dial or type [*n*].

▶ **9. Save your entry.**

Select Enter. F10

▶ **10. Return to the System Programming menu.**

Select Exit twice. F5 F5

Secondary Cover Ring Delay

The Secondary Cover Ring Delay option replaces the Delay Ring Interval programmed on a systemwide basis in releases prior to Release 4.1.

Use this procedure to specify the delay in addition to the fixed Secondary Coverage Delay Interval (two rings) before a **Secondary Cover** button programmed for Delay Ring begins to ring audibly.

The Secondary Cover Ring Delay is programmed for each sender's extension.

Summary: Secondary Cover Ring Delay

Programmable by	System Manager
Mode	All
Idle Condition	Not required
Planning Form	Form 4b, Analog Multiline Telephone Form 4d, MLX Telephone Form 4e, MFM Adjunct: MLX Telephone Form 4f, Tip/Ring Equipment Form 5a, Direct-Line Console (DLC): Analog Form 5b, Direct-Line Console (DLC): Digital Form 5c, MFM Adjunct: DLC
Factory Setting	2 rings
Valid Entries	1–6 rings
Inspect	No
Copy Option	No
Console Procedure	`Extensions`→**More**→**More**→`Cover Delay`→`Secondary`→Dial sender's extension→`Enter`→Dial no. of rings (1–6)→`Enter`→`Exit`
PC Procedure	[F6]→[PgUp]→[PgUp]→[F2]→[F2]→Type sender's extension→[F10]→Type no. of rings (1–6)→[F10]→[F5]

Procedure: Secondary Cover Ring Delay

Console Display/Instructions	Additional Information	PC
1. Select the Extensions menu.		
System Programming: > Make a selection System Extensions SysRenumber Options Operator Tables LinesTrunks AuxEquip Exit NightSrvce		F6
2. Go to the third screen of the Extensions menu.		
Extensions: > Make a selection LinesTrunks RestrctCopy Line Copy Account Dial OutCd BIS/HFAI Restriction Call Pickup Exit VoiceSignl	Press **More** twice.	PgUp PgUp
3. Select Cover Delay.		
Extensions: > Make a selection TrkTransfer ServiceObs Cover Delay HotLine DisplayPref Exit		F1
4. Select Secondary.		
Cover Delay Make a selection Primary Secondary Group Exit Enter		F1

Console Display/Instructions **Additional Information** **PC**

▶ **5. Specify the sender's extension.**

```
Secondary Ring Delay:
Enter extension



Backspace
Exit            Enter
```

If no DSS is attached:
SP: "Entering an Extension"

If DSS is attached:
Toggle the red LED on or off as required. Go to Step 6.
On = trunk-to-trunk transfer is enabled.
Off = trunk-to-trunk transfer is disabled.

▶ **6. Save your entry.**

Select Enter. F10

▶ **7. Erase the current number of rings (*x*).**

```
Sec Cov Delay Ext xxxx:
Enter number rings (1-6)

x

Backspace       Next
Exit            Enter
```

xxxx = number entered in Step 5

Press **Drop**. Alt + P

▶ **8. Enter the number of rings before the call goes to Secondary Coverage (*n = 1 to 6).***

Dial or type [*n*].

▶ **9. Save your entry.**

Select Enter. F10

▶ **10. Return to the System Programming menu.**

Select Exit twice. F5 F5

Group Coverage Ring Delay

The Group Cover Ring Delay option replaces the Delay Ring Interval programmed on a systemwide basis in releases prior to Release 4.1.

Use this procedure to specify the following:

- The number of rings before sending calls to Group Coverage when the sender does not have Primary or Secondary Coverage *or* the receivers are not available, *and* the Group Coverage receiver is either a Calling Group only or the QCC queue only (no Group Cover buttons on multiline telephones).
- The number of rings in addition to the Primary Cover Ring delay before sending calls to Group Coverage when the sender has Primary or Secondary Coverage *and* the receivers are available.

The Group Coverage Ring Delay is programmed for each sender's extension.

Summary: Group Coverage Ring Delay

Programmable by	System Manager
Mode	All
Idle Condition	Not required
Planning Form	Form 4b, Analog Multiline Telephone Form 4d, MLX Telephone Form 4e, MFM Adjunct: MLX Telephone Form 4f, Tip/Ring Equipment Form 5a, Direct-Line Console (DLC): Analog Form 5b, Direct-Line Console (DLC): Digital Form 5c, MFM Adjunct: DLC
Factory Setting	3 rings
Valid Entries	1–6 rings
Inspect	No
Copy Option	No
Console Procedure	`Extensions`→**More**→**More**→`Cover Delay`→`Group`→ Dial sender's extension→`Enter`→Dial no. of rings (1–6)→ `Enter`→`Exit`
PC Procedure	[F6]→[PgUp]→[PgUp]→[F2]→[F3]→Type sender's extension→[F10]→Type no. of rings (1–6)→[F10]→[F5]

Procedure: Group Coverage Ring Delay

Console Display/Instructions	Additional Information	PC
1. Select the Extensions menu.		
System Programming: > Make a selection System Extensions SysRenumber Options Operator Tables LinesTrunks AuxEquip Exit NightSrvce		F6
2. Go to the third screen of the Extensions menu.		
Extensions: > Make a selection LinesTrunks RestrctCopy Line Copy Account Dial OutCd BIS/HFAI Restriction Call Pickup Exit VoiceSignl	Press **More** twice.	PgUp PgUp
3. Select Cover Delay.		
Extensions: > Make a selection TrkTransfer ServiceObs Cover Delay HotLine DisplayPref Exit		F1
4. Select Group.		
Cover Delay Make a selection Primary Secondary Group Exit Enter		F1

Console/Display Instructions **Additional Information** **PC**

▶ **5. Specify the sender's extension.**

```
Group Cover Ring Delay:
Enter extension



Backspace
Exit            Enter
```

If no DSS is attached:
SP: "Entering an Extension"

If DSS is attached:
Toggle the red LED on or
off as required. Go to Step 6.
On = trunk-to-trunk transfer is enabled.
Off = trunk-to-trunk transfer is disabled.

▶ **6. Save your entry.**

Select Enter. F10

▶ **7. Erase the current number of rings (*x*).**

```
Grp Cov Delay Ext xxxx:
Enter number rings (1-6)

x

Backspace       Next
Exit            Enter
```

xxxx = number entered in Step 5

Press **Drop**. Alt + P

▶ **8. Enter the number of rings before the call goes to Group Coverage (*n = 1 to 6).***

Dial or type [*n*].

▶ **9. Save your entry.**

Select Enter. F10

▶ **10. Return to the System Programming menu.**

Select Exit twice. F5 F5

HotLine

Use this procedure to enable or disable the HotLine feature on a single-line telephone set or device.

Summary: HotLine

Programmable by	System Manager
Mode	All
Idle Condition	Not required
Planning Form	Form 4f, Tip/Ring Equipment
Factory Setting	Disabled
Valid Entries	Yes, No
Inspect	No
Copy Option	No
Console Procedure	Extensions→**More**→**More**→HotLine→ Enter HotLine extension→Enter→Exit→Exit
PC Procedure	F6 →PgUp →PgUp →F3 →Type HotLine extension→ F10 →F5 →F5

Procedure: HotLine

Console Display/Instructions	Additional Information	PC
▶ **1. Select the Extensions menu.**		
System Programming: > Make a selection System Extensions SysRenumber Options Operator Tables LinesTrunks AuxEquip Exit NightSrvce		F6
▶ **2. Go to the third screen of the Extensions menu.**		
Extensions: > Make a selection LinesTrunks RestrctCopy Line Copy Account Dial OutCd BIS/HFAI Restriction Call Pickup Exit VoiceSignl	Press **More** twice.	PgUp PgUp

Console/Display Instructions **Additional Information** **PC**

▶ 3. Select HotLine.

```
Extensions:              >
Make a selection
TrkTransfer     ServiceObs
Cover Delay
HotLine
DisplayPref
Exit
```

F3

▶ 4. Specify the extension.

```
HotLine Extensions:
Enter extensions


                Delete
Backspace
Exit            Enter
```

If no DSS is attached:
SP: “Entering an Extension”

If DSS is attached:
Toggle the red LED on or off as required. Go to Step 6.
On = HotLine is enabled.
Off = HotLine is disabled.

▶ 5. Assign or remove HotLine from the extension entered in Step 4.

Select Enter to allow HotLine operation or F10
Delete to disallow HotLine operation. F8

You may continue to assign or remove HotLine operation from additional extensions by repeating Steps 4 and 5.

▶ 6. Return to the System Programming menu.

Select Exit twice. F5 F5

Display Preference

In Release 6.0 and later systems, use this procedure to specify display preferences for incoming inside calls or non-local dial plan calls that arrive on PRI tandem trunks. Non-local dial plan calls that arrive on private networked tandem tie trunks are not affected; such calls display on the recipient's telephone like outside calls do; that is they do not have Calling Party information. For details about the display content, see the *Feature Reference.*

Summary: Display Preference

Programmable by	System Manager
Mode	Hybrid/PBX
Idle Condition	Not required
Planning Form	Non-Local Dial Plan Administration Form in the Installation Specification
Factory Setting	Calling Number
Valid Entries	Calling Name, Calling Number, Both
Inspect	No
Copy Option	Yes
Console Procedure	Extensions→**More**→**More**→DisplayPref→ Dial extension no.→Enter→Select display option→ Enter→Exit→Exit
PC Procedure	F6→PgUp→PgUp→F4→Type extension no.→F10→ Select display option→F10→F5→F5

Procedure: Display Preference

Console Display/Instructions	Additional Information	PC
▶ **1. Select the Extensions menu.**		
System Programming: > Make a selection System Extensions SysRenumber Options Operator Tables LinesTrunks AuxEquip Exit NightSrvce		F6

Console/Display Instructions	Additional Information	PC

▶ 2. Go to the third screen of the Extensions menu.

```
Extensions:              >
Make a selection
LinesTrunks      RestrctCopy
Line Copy        Account
Dial OutCd       BIS/HFAI
Restriction      Call Pickup
Exit             VoiceSignl
```

Press **More** twice. PgUp PgUp

▶ 3. Select Display Preference.

```
Extensions:              >
Make a selection
TrkTransfer      ServiceObs
Cover Delay
HotLine
DisplayPref
Exit
```

F4

▶ 4. Specify the extension.

```
Display Preferences:
Enter extension



Backspace
Exit             Enter
```

SP: “Entering an Extension”

▶ 5. Save your entry.

Select Enter. F10

▶ 6. Select a display preference.

```
Display Pref Ext xxxx:
Enter display preference
Calling Name
Calling Num
Both
                 Next
Exit             Enter
```

xxxx = extension number entered in Step 4

Calling Num is the highlighted factory setting.

Select Calling Name, F1
Calling Num, or F2
Both. F3

Console/Display Instructions	Additional Information	PC
▶ **7. Save your entry.**		
Select Enter or Next.		F10 F9
	If you select Next to assign a display preference to the next extension in a sequence, repeat Step 5.	
▶ **8. Return to the System Programming menu.**		
Select Exit twice.		F5 F5

Service Observing

In Release 6.1 and later systems, use this procedure to configure up to 16 Service Observing groups on a system. Each Service Observing group consists of one Service Observer and a list of the stations (up to the system maximum of 200) that the observer is allowed to monitor. A warning tone is programmed on a per group basis to provide an audible indication that a station is being observed.

NOTE:
Service Observing may be subject to federal, state, or local laws, rules, or regulations or require the consent of one or both of the call parties. You must check in your jurisdiction and comply with all applicable laws, rules, and regulations before using this feature. Failure to comply may result in severe penalties.

Summary: Service Observing

Programmable by	System Manager
Mode	All
Idle Condition	Not required
Planning Form	Form 4d, MLX Telephone Form 5b, Direct-Line Console (DLC): Digital Form 11, Service Observing: Group Assignment
Factory Setting	Warning: Yes
Valid Entries	Warning: Yes, No
Inspect	Yes
Copy Option	No

Console Procedure

To assign a Service Observer to a Service Observing group:
Extensions→**More**→**More**→ServiceObs→Observer→ Dial group no.→Enter→Dial ext. no. of Service Observer→ Enter or Delete→Exit→Exit

To enable or disable Warning Tone on a per group basis:
Extensions→**More**→**More**→ServiceObs→Warning→ Dial group no.→Enter→Yes or No→Enter→Exit→ Exit

To assign a member extension to a Service Observing group:
Extensions→**More**→**More**→ServiceObs→Members→ Dial group no.→Enter→Dial ext. no.→Enter or Delete→ Exit→ Exit→Exit

PC Procedure

To assign a Service Observer to a Service Observing group:
F6 →PgUp →PgUp →F6 →F1 →Type group no.→F10 → Type ext. no. of Service Observer→F10 or F8 →F5 →F5

To enable or disable Warning Tone on a per group basis:
F6 →PgUp →PgUp →F6 →F2 →Type group no.→F10 → F2 or F3 →F10 →F5 →F5

To assign a member extension to a Service Observing group:
F6 →PgUp →PgUp →F6 →F3 →Type group no.→F10 → Type ext. no.→F10 or F8 →F5 →F5 →F5

Procedure: Display Preference

Console Display/Instructions	Additional Information	PC
▶ 1. Select the Extensions menu.		
System Programming: > Make a selection System Extensions SysRenumber Options Operator Tables LinesTrunks AuxEquip Exit NightSrvce		F6
▶ 2. Go to the third screen of the Extensions menu.		
Extensions: > Make a selection LinesTrunks RestrctCopy Line Copy Account Dial OutCd BIS/HFAI Restriction Call Pickup Exit VoiceSignl	Press **More** twice.	PgUp PgUp

Console/Display Instructions **Additional Information** **PC**

▶ **3. Select Service Observing.**

```
Extensions:              >
Make a selection
TrkTransfer     ServiceObs
Cover Delay
HotLine
DisplayPref
Exit
```

F6

▶ **4. Select an option.** ● ◆ ■

```
Service Observing:
Make a selection
Observer
Warning
Members

Exit            Enter
```

To assign an Observer to a Service Observing group, select Observer and go to ● Assign a Service Observer Procedure. F1

To enable or disable Warning tone on a per group basis, select Warning and go to ◆ Enable/Disable Warning Tone Procedure. F2

To assign a member extension to a Service Observing group, select Members and go to ■ Assign Members to Service Observing Groups Procedure. F3

● Assign a Service Observer Procedure

Console/Display Instructions **Additional Information** **PC**

▶ **1. Enter the Service Observing group number (*nn* = 1 to 16).**

```
Service Observing:
Enter group number (1-16)



Backspace
Exit            Enter
```

Dial or type [*nn*].

▶ **2. Save your entry.**

Select Enter. F10

Console/Display Instructions **Additional Information** **PC**

▶ **3. Specify the Observer extension number.**

```
Service Obs Group  xx:
Enter Service Observer



                Delete
Backspace       Next
Exit            Enter
```

xx = group number entered in Step 1

SP: “Entering an Extension”

▶ **4. Assign or remove the Observer from the Service Observing group.**

Select Enter or F10
Delete. F8

You may continue to assign or remove Observers to/from Service Observing groups by repeating Steps 1 through 3.

▶ **5. Save your entry.**

Select Enter. F10

▶ **6. Return to the System Programming menu.**

Select Exit two times. F5 F5

◆ **Enable/Disable Warning Tone Procedure**

Console/Display Instructions **Additional Information** **PC**

▶ **1. Enter the Service Observing group number (*nn* = 1 to 16).**

```
Service Observing:
Enter group number (1-16)



Backspace
Exit            Enter
```

Dial or type [*nn*].

▶ **2. Save your entry.**

Select Enter. F10

Console/Display Instructions **Additional Information** **PC**

▶ **3. Turn Warning Tone On or Off.**

```
Service Obs Group  xx:
Give Warning tone when
extensions observed?
Yes
No
                Next
Exit            Enter
```

xx = group number entered in Step 1

Select Yes to turn Warning tone on. F2

Select No to turn Warning tone off. F3

▶ **4. Save your entry.**

Select Enter. F10

▶ **5. Return to the System Programming menu.**

Select Exit two times. F5 F5

■ Assign Members to Service Observing Groups Procedure

Console/Display Instructions **Additional Information** **PC**

▶ **1. Enter the Service Observing group number (*nn* = 1 to 16).**

```
Service Observing:
Enter group number (1-16)



Backspace
Exit            Enter
```

Dial or type [*nn*].

▶ **2. Save your entry.**

Select Enter. F10

▶ **3. Specify the Member extension number.**

```
Service Obs Group  xx:
Enter extensions



                Delete
Backspace
Exit            Enter
```

xx = group number entered in Step 1

SP: “Entering an Extension”

Console/Display Instructions	Additional Information	PC
▶ **4. Assign or remove the extension from the Service Observing group.**		
Select Enter or Delete.		F10 F8
	You may continue to assign or remove Members to/from Service Observing groups by repeating Steps 1 through 3.	
▶ **5. Return to the System Programming menu.**		
Select Exit three times.		F5 F5 F5

Optional Operator Features

The summaries in this section affect feature programming for both DLC and QCC operator positions and include the following:

- Operator Hold Timer
- DLC Operator Automatic Hold

QCC operator features are covered in the next section.

Operator Hold Timer

Use this procedure to set the length of the operator hold timer for all DLCs and QCCs. If the system operator does not pick up the call within the time programmed, an abbreviated ring reminds the operator that a call is being held.

This option cannot be programmed for individual operator positions.

Summary: Operator Hold Timer

Programmable by	System Manager
Mode	All
Idle Condition	Not required
Planning Form	Form 6a, Optional Operator Features
Factory Setting	60 seconds
Valid Entries	10 to 255 seconds
Inspect	No
Copy Option	No
Console Procedure	`◊Operator`→`Hold Timer`→**Drop**→Dial no. of seconds→`Enter`→`Exit`
PC Procedure	F3→F3→Alt + P→Type no. of seconds→F10→F5

Procedure: Operator Hold Timer

Console Display/Instructions	Additional Information	PC
▶ **1. Select the Operator menu.**		
System Programming: > Make a selection System Extensions SysRenumber Options Operator Tables LinesTrunks AuxEquip Exit NightSrvce		F3
▶ **2. Select Hold Timer.**		
System Operator: Make a selection Positions Queued Call Hold Timer DLC Hold Exit		F3
▶ **3. Erase the current hold timer setting (*xxx*).**		
Operator Hold Timer: Enter length of hold timer (10 to 255 sec) *xxx* Backspace Exit Enter	Press **Drop.**	Alt + P
▶ **4. Enter the number of seconds to hold the call (*nnn = 10 to 255).***		
Dial or type [*nnn*].		↵
▶ **5. Save your entry.**		
Select Enter.		F10
▶ **6. Return to the System Programming menu.**		
Select Exit.		F5

DLC Operator Automatic Hold

Use this procedure to enable or disable the DLC Operator Automatic Hold feature for DLC operator positions. When this feature is enabled, it prevents accidental call disconnection.

Summary: DLC Operator Automatic Hold

Programmable by	System Manager
Mode	All
Idle Condition	Not required
Planning Form	Form 6a, Optional Operator Features
Factory Setting	Disabled
Valid Entries	Disabled, Enabled
Inspect	No
Copy Option	No
Console Procedure	Operator→DLC Hold→Automatic Hold Enable or Automatic Hold Disable→Enter→Exit
PC Procedure	F3→F4→F1 or F2→F10→F5

Procedure: DLC Operator Automatic Hold

Console Display/Instructions	Additional Information	PC
▶ **1. Select the Operator menu.**		
System Programming: > Make a selection System Extensions SysRenumber Options Operator Tables LinesTrunks AuxEquip Exit NightSrvce		F3
▶ **2. Select DLC Hold.**		
System Operator: Make a selection Positions Queued Call Hold Timer DLC Hold Exit		F4

Console Display/Instructions	Additional Information	PC
3. Specify whether to enable or disable automatic hold.		
DLC Auto Hold: Select one Auto Hold Enable Auto Hold Disable Exit Enter	Select Auto Hold Enable or Auto Hold Disable.	F1 F2
4. Save your entry.		
Select Enter.		F10
5. Return to the System Programming menu.		
Select Exit.		F5

QCC Optional Features

This section contains programming summaries for the following options for QCC operator positions:

- Hold Return
- Automatic Hold or Release
- Queue over Threshold
- Elevate Priority
- Calls-in-Queue Alert
- QCC Operator to Receive Call Types
- Call Type Queue Priority Level
- Message Center Operation
- Automatic or Manual Extended (Directed) Call Completion
- Return Ring
- Position Busy Backup
- Voice Announce

NOTE:
These options are available in Hybrid/PBX mode only.

Hold Return

Use this procedure to determine whether calls on hold are returned to the QCC queue or remain on hold, on the QCC operator console, after the hold timer has expired twice. After the hold timer expires the first time, the operator hears an abbreviated ring as a call-on-hold reminder. If another call is received at the same time that the hold timer expires, 10 seconds are added to the programmed operator hold timer interval for the first call. If the QCC operator does not pick up a call by the time the hold timer expires twice, the call can be programmed to either remain on hold or return to the QCC queue.

This option cannot be programmed for individual QCC operator positions. The single setting applies to all QCC operator positions.

Summary: Hold Return

Programmable by	System Manager
Mode	Hybrid/PBX
Idle Condition	Not required
Planning Form	Form 6a, Optional Operator Features
Factory Setting	Calls remain on hold
Valid Entries	Remain on hold, Return to QCC queue
Inspect	No
Copy Option	No
Console Procedure	Operator→Queued Call→Hold Rtrn→Return to Queue or Remain on Hold→Enter→Exit→Exit
PC Procedure	F3 → F2 → F1 → F1 or F2 → F10 → F5 → F5

Procedure: Hold Return

Console Display/Instructions	Additional Information	PC
1. Select the Operator menu.		
System Programming: > Make a selection System Extensions SysRenumber Options Operator Tables LinesTrunks AuxEquip Exit NightSrvce		F3
2. Select Queued Call.		
System Operator: Make a selection Positions Queued Call Hold Timer DLC Hold Exit		F2

Console Display/Instructions **Additional Information** **PC**

▶ **3. Select Hold Return.**

```
Queued Call Operator:    >
Make a selection
Hold Rtrn        InQue Alert
HoldRelease      Call Types
Threshold        Msg Center
ElvatePrior      ExtndComplt
Exit             Return Ring
```

F1

▶ **4. Specify whether calls on hold return to the QCC queue or remain on hold when the hold timer expires twice.**

```
Queued Call Hold Return:
Select one
Return to Queue
Remain on Hold


Exit             Enter
```

Select Return to Queue or Remain on Hold. F1 F2

▶ **5. Save your entry.**

Select Enter. F10

▶ **6. Return to the System Programming menu.**

Select Exit twice. F5 F5

Automatic Hold or Release

Use this procedure to specify whether a call in progress (on a **Call** button) is automatically put on hold (Automatic Hold) or disconnected (Automatic Release) when the operator presses another button.

This option cannot be programmed for individual QCC operator positions. The single setting applies to all QCC operator positions.

Summary: Automatic Hold or Release

Programmable by	System Manager
Mode	All
Idle Condition	Not required
Planning Form	Form 6a, Optional Operator Features
Factory Setting	Automatic Release

Valid Entries	Auto Hold, Auto Release
Inspect	No
Copy Option	No
Console Procedure	Operator→Queued Call→HoldRelease→Auto Hold or Auto Release→Enter→Exit→Exit
PC Procedure	F3 → F2 → F2 → F1 or F2 → F10 → F5 → F5

Procedure: Automatic Hold or Release

Console Display/Instructions	Additional Information	PC

1. Select the Operator menu.

```
System Programming:      >
Make a selection
System          Extensions
SysRenumber     Options
Operator        Tables
LinesTrunks     AuxEquip
Exit            NightSrvce
```

F3

2. Select Queued Call.

```
System Operator:
Make a selection
Positions
Queued Call
Hold Timer
DLC Hold
Exit
```

F2

3. Select Hold Release.

```
Queued Call Operator:    >
Make a selection
Hold Rtrn       InQue Alert
HoldRelease     Call Types
Threshold       Msg Center
ElvatePrior     ExtndComplt
Exit            Return Ring
```

F2

Console Display/Instructions	Additional Information	PC
▶ 4. Specify whether in-progress calls are automatically put on hold or disconnected when another Call button is pressed.		
Queued Call HoldRelease: Select one Auto Hold Auto Release Exit Enter	Select Auto Hold or Auto Release.	F1 F2
▶ 5. Save your entry.		
Select Enter.		F10
▶ 6. Return to the System Programming menu.		
Select Exit two times.		F5 F5

Queue over Threshold

Use this procedure to specify the maximum number of calls (threshold) in the QCC queue before system operators are notified with a tone that the threshold has been reached or exceeded. If the threshold is set to 0, operators are not notified.

Summary: Queue over Threshold

Programmable by	System Manager
Mode	Hybrid/PBX
Idle Condition	Not required
Planning Form	Form 6a, Optional Operator Features
Factory Setting	0
Valid Entries	0 to 99
Inspect	No
Copy Option	No
Console Procedure	Operator→Queued Call→Threshold→**Drop**→Dial no. of calls→Enter→Exit→Exit
PC Procedure	F3→F2→F3→Alt + P→Type no. of calls→F10→F5→F5

Procedure: Queue over Threshold

Console Display/Instructions	Additional Information	PC
▶ **1. Select the Operator menu.**		
System Programming: > Make a selection System Extensions SysRenumber Options Operator Tables LinesTrunks AuxEquip Exit NightSrvce		F3
▶ **2. Select Queued Call.**		
System Operator: Make a selection Positions Queued Call Hold Timer DLC Hold Exit		F2

Console Display/Instructions	Additional Information	PC

3. Select Threshold.

```
Queued Call Operator:    >
Make a selection
Hold Rtrn        InQue Alert
HoldRelease      Call Types
Threshold        Msg Center
ElvatePrior      ExtndComplt
Exit             Return Ring
```

F3

4. Erase the current threshold (*xx*).

```
Queued Over Threshold:
Enter maximum number for
Queue (0 to 99)
xx



Backspace
Exit             Enter
```

Press **Drop.** Alt + P

5. Enter the maximum number of calls allowed in QCC queue before operators are notified (*nn* = 0 to 99).

Use 0 to specify that operators are not notified.

Dial or type [*nn*].

6. Save your entry.

Select Enter. F10

7. Return to the System Programming menu.

Select Exit two times. F5 F5

Elevate Priority

Use this procedure to specify the length of time before calls waiting in the QCC queue are automatically reprioritized to a higher level. If priority is set to 0, calls are not prioritized.

Summary: Elevate Priority

Programmable by	System Manager
Mode	Hybrid/PBX
Idle Condition	Not required
Planning Form	Form 6a, Optional Operator Features
Factory Setting	0 seconds
Valid Entries	0 and 5 to 30 seconds
Inspect	No
Copy Option	No
Console Procedure	Operator→Queued Call→ElvatePrior→**Drop**→ Dial no. of seconds→Enter→Exit→Exit
PC Procedure	F3 → F2 → F4 → Alt + P → Type no. of seconds → F10 → F5 → F5

Procedure: Elevate Priority

Console Display/Instructions	Additional Information	PC
▶ 1. Select the Operator menu.		
System Programming: > Make a selection System Extensions SysRenumber Options Operator Tables LinesTrunks AuxEquip Exit NightSrvce		F3

Console Display/Instructions	Additional Information	PC

▶ 2. Select Queued Call.

```
System Operator:
Make a selection
Positions
Queued Call
Hold Timer
DLC Hold
Exit
```

F2

▶ 3. Select Elevate Priority.

```
Queued Call Operator:    >
Make a selection
Hold Rtrn        InQue Alert
HoldRelease      Call Types
Threshold        Msg Center
ElvatePrior      ExtndComplt
Exit             Return Ring
```

F4

▶ 4. Erase the current call priority (*xx*).

```
Priority Elevated:
Enter times (5-30, 0=no)
call priority elevated
xx

Backspace
Exit             Enter
```

Press **Drop.** Alt + P

▶ 5. Enter the number of seconds calls will wait in the queue before being reprioritized (*nn* = 5 to 30).

Use 0 to specify that calls are not reprioritized. Dial or type [*nn*].

▶ 6. Save your entry.

Select Enter. F10

▶ 7. Return to the System Programming menu.

Select Exit two times. F5 F5

Calls-In-Queue Alert

Use this procedure to specify whether each QCC operator is notified (with a single beep) when a new call enters the QCC queue.

Summary: Calls-In-Queue Alert

Programmable by	System Manager
Mode	Hybrid/PBX
Idle Condition	Not required
Planning Form	Form 6a, Optional Operator Features
Factory Setting	Disable
Valid Entries	Enable, Disable
Inspect	Yes
Copy Option	No
Console Procedure	Operator→Queued Call→InQue Alert→Dial ext. no.→Enter→InQue Alert Enable or InQue Alert Disable→Enter→Exit→Exit
PC Procedure	F3→F2→F6→Type ext. no.→F10→F1 or F2→F10→F5→F5

Procedure: Calls-In-Queue Alert

Console Display/Instructions	Additional Information	PC
1. Select the Operator menu.		
System Programming: > Make a selection System Extensions SysRenumber Options Operator Tables LinesTrunks AuxEquip Exit NightSrvce		F3
2. Select Queued Call.		
System Operator: Make a selection Positions Queued Call Hold Timer DLC Hold Exit		F2

Console Display/Instructions **Additional Information** **PC**

▶ 3. Select In-Queue Alert.

```
Queued Call Operator:    >
Make a selection
Hold Rtrn        InQue Alert
HoldRelease      Call Types
Threshold        Msg Center
ElvatePrior      ExtndComplt
Exit             Return Ring
```

F6

▶ 4. Enter the QCC extension to receive the calls-in-queue alert.

```
In Queue Alert:
Enter QCC Operator
extension number

Backspace
Exit             Enter
```

If no DSS is attached:
SP: "Entering an Extension"

If DSS is attached:
Toggle the red LED on or off as required. Go to Step 7.
On = operator receives calls-in-queue alert.
Flashing = operator does not receive calls-in-queue alert.
Off = not an operator position.

▶ 5. Specify whether the operator receives the alert.

```
QCC Operator xxxx :
Select one
InQue Alert Enable
InQue Alert Disable

                 Next
Exit             Enter
```

xxxx = operator entered in Step 1

Select `InQue Alert Enable` or F1
`InQue Alert Disable`. F2

▶ 6. Save your entry.

Select `Enter` or F10
`Next`. F9

Use `Next` to program the next QCC position. The next QCC operator is displayed on Line 1.

▶ 7. Return to the System Programming menu.

Select `Exit` two times. F5 F5

QCC Operator to Receive Call Types

Use this procedure to specify which QCC operators receive the following types of calls:

- Dial 0 calls (internal calls to the system operator)
- DID calls to invalid destinations (unassigned extension numbers)
- Calls to the Listed Directory Number (extension for the QCC queue)
- Calls programmed to return to the QCC queue (returning from directing, camped-on, held calls, and operator parked calls)
- Group Coverage calls
- Forward/Follow Me calls

The QCC queue can be a receiver for the maximum number of coverage groups (30).

NOTES:

1. If you want a QCC operator position to operate as a message center (receiving returning parked and directed calls, Group Coverage calls, and calls to unassigned DID numbers), program the Message Center option before you assign the operator to receive call types.
2. This procedure does not include use of the menu options `Follow/Frwd` or `QCC Ext`. These two options are used to assign queue priorities and are not associated with individual QCC operators. "Call Type Queue Priority Level" on page 3–384.
3. This procedure does not include programming the operator position to receive calls on individual lines or trunks. See "QCC Operator to Receive Call Types" on page 3–379.
4. Programming an operator position to receive DID calls to invalid destinations does not cause the calls to ring into the QCC queue unless you program such calls to be sent to a backup extension. "Invalid Destination" on page 3–181. When no operator is assigned to receive the call types, the call does not ring into the QCC queue, and the caller hears an error tone.
5. If a trunk assigned to ring into the QCC queue is to be assigned shared remote access, assign that trunk remote access before performing this procedure. "Remote Access Features" on page 3–502.

Summary: QCC Operator to Receive Call Types

Programmable by	System Manager
Mode	Hybrid/PBX
Idle Condition	Not required
Planning Form	Form 6a, Optional Operator Features
Factory Setting	QCC operator receives the following calls: Dial 0 Unassigned DID Listed Directory Number Returning
Valid Entries	Not applicable
Inspect	Yes
Copy Option	No
Console Procedure	Operator→Queued Call→Call Types→Select a call type→Operator→Dial coverage group no.→Enter→ Dial ext. no.→Enter→Exit→Exit→Exit→Exit→Exit
PC Procedure	F3→F2→F7→Select a call type→F2→Type coverage group no.→F10→Type ext. no.→F10→F5→F5→ F5→F5→F5

Procedure: QCC Operator to Receive Call Types

Console Display/Instructions	Additional Information	PC
▶ 1. Select the Operator menu.		
System Programming: > Make a selection System Extensions SysRenumber Options Operator Tables LinesTrunks AuxEquip Exit NightSrvce		F3
▶ 2. Select Queued Call.		
System Operator: Make a selection Positions Queued Call Hold Timer DLC Hold Exit		F2

Console Display/Instructions **Additional Information** **PC**

▶ **3. Select Call Types.**

```
Queued Call Operator:    >
Make a selection
Hold Rtrn        InQue Alert
HoldRelease      Call Types
Threshold        Msg Center
ElvatePrior      ExtndComplt
Exit             Return Ring
```

F7

▶ **4. Select a call type.** ● ◆

```
Call Type:
Make a selection

Dial 0           QCC Ext
Follow/Frwd      Returning
UnassignDID      GrpCoverage
ListedNumbr
Exit
```

To use Follow/Frwd or QCC Ext, see "Call Type Queue Priority Level" on page 3–384.

If you select GrpCoverage, go to ● Group Coverage Procedure.

If you select Dial0, UnassignDID, ListedNumbr, or Returning, go to ◆ Call Type Procedure.
Press the button or function key next to your selection.

● Group Coverage Procedure

Console Display/Instructions **Additional Information** **PC**

▶ **1. Select Operator.**

```
****
Make a selection
Priority
Operator


Exit
```

**** = option name selected in Step 4

F2

▶ **2. Enter the group coverage number (*nn* = 1 to 30).**

```
Group Coverage Calls:
Enter grp coverage
number (1-30)


Backspace
Exit             Enter
```

Dial or type [*nn*].

Console Display/Instructions	Additional Information	PC
▶ **3. Save your entry.**		
Select Enter.		F10
▶ **4. Specify the operator position.**		
Operator GrpCoverage *xx* : Enter QCC operator extension number Delete Backspace Next Exit Enter	*xx* = number entered in Step 6 **If no DSS is attached:** **SP:** “Entering an Extension” **If DSS is attached:** Toggle the red LED on or off as required. Go to Step 6. On = operator receives Group Coverage calls. Flashing = operator does not receive Group Coverage calls. Off = extension is not an operator position.	
▶ **5. Assign or remove the operator from Group Coverage calls.**		
Select Enter or		F10
Delete.		F8
	You may continue to assign or remove QCC operators from Group Coverage calls by repeating Steps 4 and 5.	
▶ **6. Assign operators to the receive calls from the next Group Coverage number or go to Step 7.**		
Select Next.		F9
	Return to Step 4. The next Group Coverage number displays on Line 1.	
▶ **7. Return to the System Programming menu.**		
Select Exit five times.		F5 F5 F5 F5 F5

◆ Call Type Procedure

Console Display/Instructions	Additional Information	PC

▶ 1. Select Operator.

```
****
Make a selection
Priority
Operator


Exit
```

**** = option name selected in Step 4

F2

▶ 2. Specify the operator position.

```
**** Operator:
Enter QCC operator
extension number (0=init)


                Delete
Backspace
Exit            Enter
```

**** = option name selected in Step 4

If no DSS is attached:
SP: “Entering an Extension”

If DSS is attached:
Toggle the red LED on or off as required.

On = operator receives call type.
Flashing = operator does not receive call type.
Off = extension is not an operator position.

▶ 3. Assign or remove the operator from the call type specified in Step 4 of the main procedure.

Select Enter or F10
Delete. F8

You may continue to assign or remove QCC operators from the call type by repeating Steps 2 and 3.

▶ 4. Return to the System Programming menu.

Select Exit five times. F5 F5 F5 F5 F5

Call Type Queue Priority Level

Use this procedure to assign a priority value (1 to 7) that determines the order in which calls programmed to ring into the QCC queue are sent to QCC system operator positions. A value of 1 is the highest priority. The QCC queue priority level is assigned for the following types of calls:

- Dial 0 calls (internal calls to the system operator)
- DID calls to invalid destinations (unassigned extension numbers)
- Calls to the Listed Directory Number (extension for the QCC queue)
- Calls programmed to return to the QCC queue (returning from extending, camped-on, held calls, and operator parked calls)
- Group Coverage calls
- Calls signed in (Follow) or forwarded to the system operator
- Calls to a system operator extension number

This procedure does not include programming the QCC queue priority level for individual lines or trunks to ring into the queue. See “QCC Queue Priority Level” on page 73.

Summary: Call Type Queue Priority Level

Programmable by	System Manager
Mode	Hybrid/PBX
Idle Condition	Not required
Planning Form	Form 6a, Optional Operator Features
Factory Setting	4
Valid Entries	1 to 7
Inspect	No
Copy Option	No
Console Procedure	`Operator`→`Queued Call`→`Call Types`→Select call type→`Priority`→**Drop**→Dial priority level→`Enter`→`Exit`→`Exit`→`Exit`→`Exit`
PC Procedure	[F3]→[F2]→[F7]→Select call type→[F1]→[Alt] + [P]→Type priority level→[F10]→[F5]→[F5]→[F5]→[F5]

Procedure: Call Type Queue Priority Level

Console/Display Instructions	Additional Information	PC
1. Select the Operator menu.		
System Programming: > Make a selection System Extensions SysRenumber Options Operator Tables LinesTrunks AuxEquip Exit NightSrvce		F3
2. Select Queued Call.		
System Operator: Make a selection Positions Queued Call Hold Timer DLC Hold Exit		F2
3. Select Call Types.		
Queued Call Operator: > Make a selection Hold Rtrn InQue Alert HoldRelease Call Types Threshold Msg Center ElvatePrior ExtndComplt Exit Return Ring		F7
4. Select a call type.		
Call Type: Make a selection Dial 0 QCC Ext Follow/Frwd Returning UnassignDID GrpCoverage ListedNumbr Exit	If you select Follow/Frwd or QCC Ext, go to Step 8. Press the button or function key next to your selection.	

Console Display/Instructions	Additional Information	PC
▶ 5. Select Priority.		

`**** Calls:`
`Make a selection`
`Priority`
`Operator`
 	
`Exit`
	**** = option name selected in Step 4
	
	If you did not select Group Coverage, go to Step 8.
		F1

▶ 6. Enter a coverage group number (*nn* = 1 to 30).		

`Group Coverage Calls:`
`Enter coverage group`
`(1-30) queue is receiver`
 	
`Backspace`
`Exit Enter`
	Dial or type [*nn*].	⊖

▶ 7. Save your entry.		
Select Enter.		F10
▶ 8. Erase the current priority level (*x*).		

`**** Priority:`
`Enter queue priority`
`(1-7)`
`x`
 	
`Backspace`
`Exit Enter`
	**** = option name selected in Step 4
	
	Press **Drop.**
		Alt + P

▶ 9. Enter a queue priority level (*n* = 1 to 7).		
Dial or type [*n*].		⊖
▶ 10. Save your entry.		
Select Enter.		F10
▶ 11. Return to the System Programming menu.		
Select Exit four times.		F5 F5 F5 F5

Message Center Operation

Use this procedure to designate one or more QCC operator positions to operate as a message center. The following options are automatically set for the message center position:

- Incoming calls are not directed to this position.
- Returning calls are directed to this position (return from extending and operator parked calls).
- All group coverage calls are directed to this position.
- All DID calls to invalid destinations are directed to this position.

Designating message center operation does not change any call type option programming, except that the call types mentioned above are added to the calls received at the QCC Message Center.

Summary: Message Center Operation

Programmable by	System Manager
Mode	Hybrid/PBX
Idle Condition	Not required
Planning Form	Form 6a, Optional Operator Features
Factory Setting	Not applicable
Valid Entries	QCC extension numbers
Inspect	Yes
Copy Option	No
Console Procedure	Operator→Queued Call→Msg Center→Dial ext. no.→ Enter→Exit→Exit→Exit
PC Procedure	F3→F2→F8→Type ext. no.→F5→F5→F5

Procedure: Message Center Operation

Console Display/Instructions	Additional Information	PC
▶ 1. Select the Operator menu.		
System Programming: > Make a selection System Extensions SysRenumber Options Operator Tables LinesTrunks AuxEquip Exit NightSrvce		F3

Console Display/Instructions **Additional Information** **PC**

▶ 2. Select Queued Call.

```
System Operator:
Make a selection
Positions
Queued Call
Hold Timer
DLC Hold
Exit
```

F2

▶ 3. Select Message Center.

```
Queued Call Operator:    >
Make a selection
Hold Rtrn        InQue Alert
HoldRelease      Call Types
Threshold        Msg Center
ElvatePrior      ExtndComplt
Exit             Return Ring
```

F8

▶ 4. Specify the QCC operator extension.

```
Operator Message Center:
Enter QCC operator
extension number

                 Delete
Backspace
Exit             Enter
```

If no DSS is attached:
SP: “Entering an Extension”

If DSS is attached:
Toggle the red LED on or off as required.

On = extension is message center position.
Flashing = extension is not message center position.
Off = extension is not an operator position.

▶ 5. Assign or remove the extension as a message center.

Select Enter or F8
Delete. F10

You may continue to assign or remove extensions as a message center by repeating Steps 4 and 5.

▶ 6. Return to the System Programming menu.

Select Exit three times. F5 F5 F5

Extended (Directed) Call Completion

Use this procedure to specify one of the two basic options shown below for QCC operator positions with a DSS only:

- **Automatic Completion.** Allows one-touch call transfer; that is, calls are transferred by touching only an extension button on the DSS. The operator does not have to press the **Release** button.
- **Manual Completion.** QCC operators must press the **Release** button to direct a call using a DSS.

This option cannot be programmed for individual QCC operator positions. The setting applies to all QCC operator positions.

Summary: Extended (Directed) Call Completion

Programmable by	System Manager
Mode	Hybrid/PBX
Idle Condition	Not required
Planning Form	Form 6a, Optional Operator Features
Factory Setting	Automatic Extended Completion
Valid Entries	Automatic, Manual
Inspect	No
Copy Option	No
Console Procedure	Operator→Queued Call→ExtndComplt→Automatic Complete or Manual Complete→Enter→Exit→Exit
PC Procedure	F3 → F2 → F9 → F1 or F2 → F10 → F5 → F5

Procedure: Extended (Directed) Call Completion

Console Display/Instructions	Additional Information	PC

▶ **1. Select the Operator menu.**

```
System Programming:      >
Make a selection
System          Extensions
SysRenumber     Options
Operator        Tables
LinesTrunks     AuxEquip
Exit            NightSrvce
```

F3

Console Display/Instructions **Additional Information** **PC**

▶ 2. Select Queued Call.

```
System Operator:
Make a selection
Positions
Queued Call
Hold Timer
DLC Hold
Exit
```

F2

▶ 3. Select Extended Completion.

```
Queued Call Operator:    >
Make a selection
Hold Rtrn        InQue Alert
HoldRelease      Call Types
Threshold        Msg Center
ElvatePrior      ExtndComplt
Exit             Return Ring
```

F9

▶ 4. Specify automatic call extension or require the operator to extend calls manually.

```
QCC Extend Completion:
Select one
Automatic Complete
Manual Complete

Exit             Enter
```

Select Automatic Complete F1
or Manual Complete. F2

▶ 5. Save your entry.

Select Enter. F10

▶ 6. Return to the System Programming menu.

Select Exit two times. F5 F5

Return Ring

Use this procedure to specify the number of rings before an unanswered directed call is returned to the QCC queue or QCC Message Center position.

This option cannot be programmed for individual QCC operator positions. The setting applies to all QCC operator positions.

NOTE:
If you want unanswered calls to proceed to voice mail, lengthen the return ring setting.

Summary: Return Ring

Programmable by	System Manager
Mode	Hybrid/PBX
Idle Condition	Not required
Planning Form	Form 6a, Optional Operator Features
Factory Setting	4 rings
Valid Entries	1 to 15 rings
Inspect	No
Copy Option	No
Console Procedure	Operator→Queued Call→Return Ring→**Drop**→ Dial no. of rings→Enter→Exit→Exit
PC Procedure	F3→F2→F10→Alt + P→Type no. of rings→ F10→F5→F5

Procedure: Return Ring

Console Display/Instructions	Additional Information	PC
1. Select the Operator menu.		
System Programming: > Make a selection System Extensions SysRenumber Options Operator Tables LinesTrunks AuxEquip Exit NightSrvce		F3

Console Display/Instructions	Additional Information	PC

▶ 2. Select Queued Call.

```
System Operator:
Make a selection
Positions
Queued Call
Hold Timer
DLC Hold
Exit
```

F2

▶ 3. Select Return Ring.

```
Queued Call Operator:
Make a selection
Hold Rtrn        InQue Alert
HoldRelease      Call Types
Threshold        Msg Center
ElvatePrior      ExtndComplt
Exit             Return Ring
```

F10

▶ 4. Erase the current number of rings (*xx*).

```
Queued Call Return Ring:
Enter number rings
before return (1-15)
xx

Backspace
Exit             Enter
```

Press **Drop**. Alt + P

▶ 5. Enter the number of rings before the directed call returns to the QCC queue (*nn = 1 to 15).*

Dial or type [*nn*].

▶ 6. Save your entry.

Select Enter. F10

▶ 7. Return to the System Programming menu.

Select Exit two times. F5 F5

Position Busy Backup

Use this procedure to designate or remove the calling group to provide the backup position for the QCC queue. The specified calling group receives incoming calls when all QCC operator positions are in position-busy mode.

Position Busy Backup is programmed for the QCC queue rather than for individual QCC operator positions. The calling group designated as the QCC queue backup serves as the backup for the Remote Access feature and as backup when the QCC is being used as the system programming console.

Only one Position Busy Backup can be programmed per system.

Summary: Position Busy Backup

Programmable by	System Manager
Mode	Hybrid/PBX
Idle Condition	Not required
Planning Form	Form 6a, Optional Operator Features
Factory Setting	No backup
Valid Entries	Calling group number
Inspect	No
Copy Option	No
Console Procedure	Operator→Queued Call→**More**→QCC Backup→ **Drop**→Dial ext. number→Enter or Delete→Exit→Exit
PC Procedure	F3→F2→PgUp→F1→Alt + P→Type ext. number→ F10 or F8→F5→F5

Procedure: Position Busy Backup

Console Display/Instructions	Additional Information	PC
▶ **1. Select the Operator menu.**		
System Programming: > Make a selection System Extensions SysRenumber Options Operator Tables LinesTrunks AuxEquip Exit NightSrvce		F3

Console Display/Instructions	Additional Information	PC
▶ **2. Select Queued Call.**		
System Operator: Make a selection Positions Queued Call Hold Timer DLC Hold Exit		F2
▶ **3. Go to the second screen of the Queued Call Operator menu.**		
Queued Call Operator: > Make a selection Hold Rtrn InQue Alert HoldRelease Call Types Threshold Msg Center ElvatePrior ExtndComplt Exit Return Ring	Press **More**.	PgUp
▶ **4. Select QCC Backup.**		
Queued Call Operator: Make a selection QCC Backup Voice Annc Exit		F1
▶ **5. Erase the current QCC operator backup number (*xxxx*).**		
QCC Operator Backup: Enter QCC operator of Calling Group *xxxx* Delete Backspace Exit Enter	Press **Drop**.	Alt+P

Console Display/Instructions **Additional Information** **PC**

▶ **6. Specify the calling group to provide QCC operator backup.**

```
QCC Operator Backup:
Enter QCC operator
of Calling Group

                Delete
Backspace
Exit            Enter
```

SP: “Entering an Extension”

▶ **7. Assign or remove the group as QCC operator backup.**

Select Enter or Delete. F10 F8

You may continue to assign or remove calling groups as QCC operator backups by repeating Steps 2 and 3.

▶ **8. Return to the System Programming menu.**

Select Exit two times. F5 F5

Voice Announce

Use this procedure to enable or disable Voice Announce for the QCC. Voice Announce is available only on a QCC in Release 4.0 and later.

When Voice Announce is enabled, every QCC in the system has one Voice Announce **Call** button, the **Call 5** (Ring/Voice) button. All Intercom calls that originate from a QCC **Call 5** (Ring/Voice) button are delivered as Voice Announce calls.

When Voice Announce is disabled, all Intercom calls originating at the QCC **Call** buttons are Intercom Ringing calls.

Summary: Voice Announce

Programmable by	System Manager
Mode	Hybrid/PBX
Idle Condition	Not required
Planning Form	Form 6a, Optional Operator Features
Factory Setting	Disabled
Valid Entries	Disabled, Enabled
Inspect	No

Copy Option	No
Console Procedure	Operator→Queued Call→**More**→Voice Annc→ Enabled or Disabled→Enter→Exit→Exit
PC Procedure	F3 → F2 → PgUp → F2 → F1 or F2 → F10 → F5 → F5

Procedure: Position Busy Backup

Console Display/Instructions	Additional Information	PC

1. Select the Operator menu.

```
System Programming:      >
Make a selection
System          Extensions
SysRenumber     Options
Operator        Tables
LinesTrunks     AuxEquip
Exit            NightSrvce
```

F3

2. Select Queued Call.

```
System Operator:
Make a selection
Positions
Queued Call
Hold Timer
DLC Hold
Exit
```

F2

3. Go to the second screen of the Queued Call Operator menu.

```
Queued Call Operator:    >
Make a selection
Hold Rtrn       InQue Alert
HoldRelease     Call Types
Threshold       Msg Center
ElvatePrior     ExtndComplt
Exit            Return Ring
```

Press **More**. PgUp

4. Select Voice Announce.

```
Queued Call Operator:
Make a selection
QCC Backup
Voice Annc


Exit
```

F1

Console Display/Instructions	Additional Information	PC
▶ **5. Select Enabled or Disabled.**		
QCC Voice Announce: Make a selection Enabled Disabled Exit Enter	Select Enabled or Disabled.	F1 F2
▶ **6. Save your entry.**		
Select Enter.		F10
▶ **7. Return to the System Programming menu.**		
Select Exit two times.		F5 F5

Optional Group Features

This section contains programming summaries for the following optional features:

- Pickup Groups
- Group Paging
- Group Coverage Member Assignments
- Group Coverage Delay Interval (Release 4.0 and earlier)
- Group Calling Member Assignments
- Group Calling Line/Trunk or Pool Assignments

Pickup Groups

Use this procedure to assign or remove an extension from a call pickup group. A pickup group consists of telephone users who can answer each other's calls either by pressing a button or by dialing a code.

NOTES:

1. A maximum of 30 pickup groups, with a maximum of 15 extensions per group, is allowed.
2. An extension can belong to only one group.
3. Before reassigning an extension to a new group, you must remove it from its current group.

Summary: Pickup Groups

Programmable by.	System Manager
Mode	All
Idle Condition	Not required
Planning Form	Form 7a, Pickup Groups
Factory Setting	Not applicable
Valid Entries	Pickup group number, extension number
Inspect	Yes
Copy Option	No
Console Procedure	`Extensions`→`Call Pickup`→Dial pickup group no.→ `Enter`→Dial ext. no.→`Enter`→`Enter`→`Exit`→`Exit`
PC Procedure	[F6]→[F9]→Type pickup group no.→[F10]→Type ext. no.→ [F10]→[F5]→[F5]

Procedure: Pickup Groups

Console Display/Instructions	Additional Information	PC

▶ 1. Select the Extensions menu.

```
System Programming:      >
Make a selection
System          Extensions
SysRenumber     Options
Operator        Tables
LinesTrunks     AuxEquip
Exit            NightSrvce
```

F6

▶ 2. Select Call Pickup.

```
Extensions:              >
Make a selection
LinesTrunks     RestrctCopy
Line Copy       Account
Dial OutCd      BIS/HFAI
Restriction     Call Pickup
Exit            VoicesSignl
```

F9

▶ 3. Enter the number of the pickup group (*nn* = 1 to 30).

```
Call Pickup Groups:
Enter group number (1-30)



Backspace
Exit            Enter
```

Dial or type [*nn*].

▶ 4. Save your entry.

Select **Enter**.

F10

Console/Display Instructions	Additional Information	PC

▶ 5. Specify the extension.

```
Call Pickup Group  xx:
Enter extensions

                 Delete
Backspace        Next
Exit             Enter
```

xx = number entered in Step 3

If no DSS is attached:

SP: “Entering an Extension”

If DSS is attached:

Toggle the red LED on or off as required. Go to Step 7.
On = extension is included in pickup group
Off = extension is not included in pickup group

▶ 6. Assign or remove the extension from the pickup group.

Select Enter or F10
Delete. F8

You may continue to assign or remove extensions from the pickup group by repeating Steps 5 and 6.

▶ 7. Assign or remove extensions for another pickup group or go to Step 8.

Select Next F9

Return to Step 5 to continue programming. The next extension is displayed on Line 1.

▶ 8. Return to the System Programming menu.

Select Exit twice. F5 F5

Group Paging

Use this procedure to assign or remove an extension from a paging group. A paging group consists of telephone users who hear common announcements over the telephone speakerphone. Only MLX telephones and analog multiline telephones with speakerphones can be members of a paging group.

A maximum of six paging groups with a maximum of 10 extensions per group is allowed. A seventh paging group, called the Page All group, is not limited and includes all telephones connected to the system. Extensions cannot be added to or removed from the Page All group.

To reassign an extension to a new paging group, just assign it; the extension is automatically removed from its old paging group.

Summary: Group Paging

Programmable by	System Manager
Mode	All
Idle Condition	Not required
Planning Form	Form 7b, Group Paging
Factory Setting	Not applicable
Valid Entries	Extension number
Inspect	Yes
Copy Option	No
Console Procedure	Extensions→**More**→Group Page→Dial paging group no.→Enter→Dial ext. no.→Enter→Exit→Exit
PC Procedure	F6 →PgUp →F2 →Type paging group no.→F10 → Type ext. no.→F10 →F5 →F5

Procedure: Group Paging

Console Display/Instructions	Additional Information	PC
▶ **1. Select the Extensions menu.**		
System Programming: > Make a selection System Extensions SysRenumber Options Operator Tables LinesTrunks AuxEquip Exit NightSrvce		F6
▶ **2. Go to the second screen of the Extensions menu.**		
Extensions: > Make a selection LinesTrunks RestrctCopy Line Copy Account Dial OutCd BIS/HFAI Restriction Call Pickup Exit VoicesSignl	Press **More.**	PgUp

Console/Display Instructions **Additional Information** **PC**

▶ 3. Select Group Page.

```
Extensions:
Make a selection
Ext Status      ARS Restrct
Group Page      Mic Disable
Group Cover     Remote Frwd
Grp Calling     Auth Code
Exit            Delay Frwd
```

F2

▶ 4. Enter the extension number of the paging group.

```
Group Page:
Enter extension number
of group



Backspace
Exit            Enter
```

See "System Renumbering" on page 3–20 for the factory-set extension numbers assigned to paging groups.

Dial or type [*n*].

▶ 5. Save your entry.

Select Enter.

F10

▶ 6. Specify the extension.

```
Group Page xxxx:
Enter extensions



                Delete
Backspace       Next
Exit            Enter
```

xxxx = number entered in Step 4

If no DSS is attached:
SP: "Entering an Extension"

If DSS is attached:
Toggle the red LED on or off as required. Go to Step 9.
On = extension is included in paging group
Off = extension is not included in paging group

▶ 7. Assign or remove the extension from the paging group.

Select Enter or F10
Delete. F8

You may continue to assign or remove extensions from the paging group by repeating Steps 5 and 6.

Console/Display Instructions	Additional Information	PC
▶ **8. Continue to assign the extension to another paging group or go to Step 9.**		
Select `Next`.		F9
	Return to Step 6 to continue programming. The next paging group is displayed on Line 1.	
▶ **9. Return to the System Programming menu.**		
Select `Exit` twice.		F5 F5

Group Coverage Member Assignments

Use this procedure to assign or remove an extension from a coverage group. A coverage group is a group of senders. Coverage is an arrangement in which calls from a group of senders are redirected to one or more receivers.

NOTE:
This procedure assigns *senders*. Before you begin, make certain that the *receivers* for the coverage group are also programmed. Receivers can be assigned through individual or centralized telephone programming. You can also use the Integrated Solution III/IV feature, Integrated Administration, to assign coverage receivers. See Chapter 4, “Centralized Telephone Programming,” for information about the appropriate centralized programming procedure.

A maximum of 30 coverage groups are allowed, each with an unlimited number of members. Up to eight receivers can be assigned per coverage group.

An extension can be a sender in only one group; it can be a receiver for more than one coverage group. A calling group can be assigned as a receiver for a coverage group (see “Group Coverage Receiver” on page 3–425). In Hybrid/PBX mode only, the QCC queue can be a receiver for up to 30 coverage groups. See “QCC Operator to Receive Calls” on page 3–77.

If the sender’s extension has one or more personal lines assigned, the sender can be assigned as the principal user so that calls received on the personal line are sent to receivers programmed for Individual or Group Coverage. See “Principal User for Personal Line” on page 70.

To reassign an extension to a new coverage group, just make the assignment; the extension is automatically removed from its old group.

Summary: Group Coverage Member Assignments

Programmable by	System Manager
Mode	All
Idle Condition	Not required
Planning Form	Form 7c, Group Coverage
Factory Setting	Not applicable
Valid Entries	Extension numbers
Inspect	Yes
Copy Option	No
Console Procedure	Extensions→**More**→Group Cover→Dial group no.→ Enter→Dial ext. no.→Enter→Exit→Exit
PC Procedure	F6→PgUp→F3→Type group no.→F10→Type ext. no.→ F10→F5→F5

Procedure: Group Coverage Member Assignments

Console Display/Instructions	Additional Information	PC
▶ **1. Select the Extensions menu.**		
System Programming: > Make a selection System Extensions SysRenumber Options Operator Tables LinesTrunks AuxEquip Exit NightSrvce		F6
▶ **2. Go to the second screen of the Extensions menu.**		
Extensions: > Make a selection LinesTrunks RestrctCopy Line Copy Account Dial OutCd BIS/HFAI Restriction Call Pickup Exit VoicesSignl	Press **More.**	PgUp

Console/Display Instructions **Additional Information** **PC**

▶ **3. Select Group Coverage.**

```
Extensions:
Make a selection
Ext Status      ARS Restrct
Group Page      Mic Disable
Group Cover     Remote Frwd
Grp Calling     Auth Code
Exit            Delay Frwd
```

F3

▶ **4. Enter the number of the coverage group (*nn* = 1 to 30).**

```
Group Coverage:
Enter group number(1-30)



Backspace
Exit            Enter
```

Dial or type [*nn*].

▶ **5. Save your entry.**

Select Enter. F10

▶ **6. Specify the extension.**

```
Group Cover xx Senders
Enter extensions



                Delete
Backspace       Next
Exit            Enter
```

xx = number entered in Step 4

If no DSS is attached:

SP: “Entering an Extension”

If DSS is attached:

Toggle the red LED on or off as required. Go to Step 8.
On = extension is sender in coverage group
Off = extension is not sender in coverage group

▶ **7. Assign or remove the extension from the coverage group.**

Select Enter or F10
Delete. F8

You may continue to assign or remove extensions from the coverage group by repeating Steps 5 and 6.

Console/Display Instructions	Additional Information	PC
▶ **8. Continue to assign the extension to another coverage group or go to Step 9.**		
Select Next.		F9
	Return to Step 6 to continue programming. The next coverage group is displayed on Line 1.	
▶ **9. Return to the System Programming menu.**		
Select Exit twice.		F5 F5

Group Coverage Delay Interval

Use this procedure to specify the number of rings before a call is sent to group coverage receivers.

NOTE:
This setting is for Release 4.0 and earlier systems. Use Group Coverage Ring Delay for Release 4.1 and later systems.

Summary: Group Coverage Delay Interval

Programmable by	System Manager
Mode	All
Idle Condition	Not required
Planning Form	Form 7c, Group Coverage
Factory Setting	Not applicable
Valid Entries	Extension numbers
Inspect	Yes
Copy Option	No
Console Procedure	Options→**More**→Cover Delay→**Drop**→Enter→ Dial no. of rings→Enter→Exit
PC Procedure	F7→PgUp→F6→Alt + P→Type no. of rings→F10→F5

Procedure: Group Coverage Delay Interval

Console/Display Instructions	Additional Information	PC

▶ 1. Select the Options menu.

```
System Programming:      >
Make a selection
System          Extensions
SysRenumber     Options
Operator        Tables
LinesTrunks     AuxEquip
Exit            NightSrvce
```

F7

▶ 2. Go to the second screen of the Options menu.

```
Options:                 >
Make a selection
Transfer        Callback
CampOn          Ext Status
CallParkRtn     SMDR
Delay Ring      InsideDial
Exit            ReminderSrv
```

Press **More.** PgUp

▶ 3. Select Coverage Delay.

```
Options:
Make a selection
Unassigned      Cover Delay
BehndSwitch     Inter-Digit
RecallTimer     Ringing Freq
Rotary          SecNT Timer
Exit
```

F6

▶ 4. Erase the current number of rings (*x*).

```
Coverage Delay:
Enter number rings (1-9)

x

Backspace
Exit            Enter
```

Press **Drop.** Alt + P

▶ 5. Enter the number of rings (*n* = 1 to 9).

Dial or type [*n*].

Console/Display Instructions	Additional Information	PC
▶ **6. Save your entry.**		
Select Enter.		F10
▶ **7. Return to the System Programming menu.**		
Select Exit.		F5

Group Calling Member Assignments

Use this procedure to assign or remove an extension to or from a calling group. A calling group is used to direct calls to a group of people who all handle the same type of call. A single extension number is assigned to the group and is used by both inside and outside callers to reach the group.

To reassign an extension to a new calling group, you must remove it from its old group before programming the new assignment.

NOTES:

1. If a linear hunting pattern is indicated on the back of the system planning form (6d), be sure to assign extensions to the group in the exact order that they are shown on the form. The system searches for an available member in the order in which you assign the extensions to the group.
2. A maximum of 32 calling groups with a maximum of 20 extensions per group is allowed.
3. An extension can belong to only one calling group. A QCC cannot be a member of a calling group. A delay announcement device should not be programmed as a calling group member.
4. The extension status feature must be set to the Calling Group or CMS mode before you assign members to the group. See “Extension Status” on page 466.
5. In Release 6.1 and later, one non-local member may be in a calling group. A calling group cannot contain both local and non-local members. See the *Network Reference* for information.

Summary: Group Calling Member Assignments

Programmable by	System Manager
Mode	All
Idle Condition	Not required
Planning Form	Form 7c, Group Coverage
Factory Setting	Not applicable
Valid Entries	Extension numbers
Inspect	Yes

Copy Option	No
Console Procedure	Extensions→**More**→Grp Calling→Members→ Dial calling group ext. no.→Enter→Dial ext. no.→Enter→ Exit→Exit→Exit
PC Procedure	F6 →PgUp→F4→F9→Type calling group ext. no.→ F10→Type ext. no.→F10→F5→F5→F5

Procedure: Group Calling Member Assignments

Console Display/Instructions	Additional Information	PC
1. Select the Extensions menu.		
System Programming: > Make a selection System Extensions SysRenumber Options Operator Tables LinesTrunks AuxEquip Exit NightSrvce		F6
2. Go to the second screen of the Extensions menu.		
Extensions: > Make a selection LinesTrunks RestrctCopy Line Copy Account Dial OutCd BIS/HFAI Restriction Call Pickup Exit VoicesSignl	Press **More**.	PgUp
3. Select Group Calling.		
Extensions: Make a selection Ext Status ARS Restrct Group Page Mic Disable Group Cover Remote Frwd Grp Calling Auth Code Exit Delay Frwd		F4

Console/Display Instructions **Additional Information** **PC**

▶ 4. Select Members.

```
Group Calling:          >
Make a selection
Hunt Type       Queue Alarm
DelayAnnce      Xtnl Alert
GrpCoverage     Overflow
Message         Members
Exit            Line/Pool
```

F9

▶ 5. Enter the extension number of the calling group.

```
Group Calling:
Enter extension number
of group


Backspace
Exit            Enter
```

See "System Renumbering" on page 3–20 for the factory setting for extension numbers assigned to calling groups.

If a non-local extension number is entered *xxxx* is displayed. *xxxx* = the non-local extension number.

Dial or type [*nnnn*].

▶ 6. Save your entry.

Select Enter.

F10

▶ 7. Specify the extension.

```
Group Calling xxxx:
Enter group members


                Delete
Backspace       Next
Exit            Enter
```

xxxx = number entered in Step 5

If no DSS is attached:

SP: "Entering an Extension"

If DSS is attached:

Toggle the red LED on or off as required. Go to Step 9.
On = extension is a member of the calling group.
Off = extension is not a member of the calling group.

▶ 8. Assign or remove the extension from the calling group.

Select Enter or Delete.

F10
F8

You may continue to assign or remove extensions from the calling group by repeating Steps 7 and 8.

Console/Display Instructions	Additional Information	PC
▶ **9. Continue to assign the extension to another calling group or go to Step 10.**		
Select Next		F9
	Return to Step 7 to continue programming. The next calling group is displayed on Line 1.	
▶ **10. Return to the System Programming menu.**		
Select Exit three times.		F5 F5 F5

Group Calling Line/Trunk or Pool Assignments

Use this procedure to assign or remove lines, trunks, or pools (Hybrid/PBX only) that ring directly into a calling group.

Incoming calls on each line/trunk or pool can be directed to only one calling group.

To reassign a line/trunk or pool to a new calling group, you must remove it from its old group before making the new assignment.

Summary: Group Calling Line/Trunk or Pool Assignments

Programmable by	System Manager
Mode	All
Idle Condition	Not required
Planning Form	Form 7d, Group Calling
Factory Setting	Not applicable
Valid Entries	Line, trunk, or pool number
Inspect	Yes
Copy Option	No
Console Procedure	Extensions→**More**→Grp Calling→Line/Pool→ Dial calling group ext. no.→Enter→Dial line/trunk no.→ Enter→Exit→Exit→Exit
PC Procedure	F6→PgUp→F4→F10→Type calling group ext. no.→ F10→Type line/trunk no.→F10→F5→F5→F5

Procedure: Group Calling Line/Trunk or Pool Assignments

Console Display/Instructions	Additional Information	PC
1. Select the Extensions menu.		
System Programming: >		
Make a selection		
System Extensions		
SysRenumber Options		
Operator Tables		
LinesTrunks AuxEquip		
Exit NightSrvce		F6
2. Go to the second screen of the Extensions menu.		
Extensions: >		
Make a selection		
LinesTrunks RestrctCopy		
Line Copy Account		
Dial OutCd BIS/HFAI		
Restriction Call Pickup		
Exit VoiceSignl	Press **More**.	PgUp
3. Select Group Calling.		
Extensions:		
Make a selection		
Ext Status ARS Restrct		
Group Page Mic Disable		
Group Cover Remote Frwd		
Grp Calling Auth Code		
Exit Delay Frwd		F4
4. Select Line/Pool.		
Group Calling: >		
Make a selection		
Hunt Type Queue Alarm		
DelayAnnce Xtnl Alert		
GrpCoverage Overflow		
Message Members		
Exit Line/Pool		F10

Console/Display Instructions **Additional Information** **PC**

▶ 5. Enter the extension of the calling group.

```
Group Calling:
Enter extension number
of group



Backspace
Exit            Enter
```

Dial or type [*nnnn*].

▶ 6. Save your entry.

Select Enter. F10

▶ 7. Enter the line/trunk or pool number.

```
Group Calling xxxx:
Enter line/pool number
nnnn

                Delete
Backspace       Next
Exit            Enter
```

xxxx = number entered in Step 5

Dial or type:
Pool number [*nn*]
Line/Trunk number [*nnnn*]
Slot and port number ∗*[sspp*]
Logical ID number #*[nnn*]

▶ 8. Assign or remove the line/trunk or pool from the calling group.

Select Enter or F10
Delete. F8

You may continue to assign or remove lines/trunks or pools from the calling group by repeating Steps 7 and 8.

▶ 9. Continue to assign the line/trunk or pool to another calling group or go to Step 10.

Select Next. F9

Return to Step 7 to continue programming. The next calling group is displayed on Line 1.

▶ 10. Return to the System Programming menu.

Select Exit three times. F5 F5 F5

Optional Group Calling Features

This section includes programming summaries for the following optional group calling features:

- Hunt Type
- Group Calling Delay Announcements
- Group Calling Announcement Interval
- Group Calling Repeat Announcement
- Group Coverage Receiver
- Group Calling Overflow and Thresholds
- Group Calling Message-Waiting Indicator
- Group Calling Calls-in-Queue Alarm Threshold
- Group Calling External Alert for Calls-in-Queue Alarm
- Group Type
- Queue Control (Release 6.0 and later systems only)

Hunt Type

Use this procedure to assign one of the following hunt-type patterns to calling groups:

- **Circular Hunting Pattern**. The system distributes calls to group members by hunting in a circular pattern for the first available extension after the one that received the last call to the group.
- **Linear Hunting Pattern**. The system searches for an available group member in the order in which the extensions were assigned to the calling group.
- **Most Idle Hunting Pattern.** The system searches for the available member that is “most idle.” This distribution scheme can be more equitable than the circular hunting pattern.

Summary: Hunt Type

Programmable by	System Manager
Mode	All
Idle Condition	Not required
Planning Form	Form 7d, Group Calling
Factory Setting	Circular hunting pattern
Valid Entries	Circular, Linear, Most Idle
Inspect	No
Copy Option	No
Console Procedure	Extensions→**More**→Grp Calling→Hunt Type→ Dial calling group ext. no.→Enter→Circular, Linear, or Most Idle→Enter→Exit→Exit→Exit
PC Procedure	F6→PgUp→F4→F1→Type calling group ext. no.→ F10→F1 or F2 or F3→F10→F5→F5→F5

Procedure: Hunt Type

Console Display/Instructions	Additional Information	PC
▶ **1. Select the Extensions menu.**		
System Programming: > Make a selection System Extensions SysRenumber Options Operator Tables LinesTrunks AuxEquip Exit NightSrvce		F6
▶ **2. Go to the second screen of the Extensions menu.**		
Extensions: > Make a selection LinesTrunks RestrctCopy Line Copy Account Dial OutCd BIS/HFAI Restriction Call Pickup Exit VoiceSignl	Press **More**.	PgUp

Console/Display Instructions	Additional Information	PC

▶ 3. Select Group Calling.

```
Extensions:
Make a selection
Ext Status      ARS Restrct
Group Page      Mic Disable
Group Cover     Remote Frwd
Grp Calling     Auth Code
Exit            Delay Frwd
```

F4

▶ 4. Select Hunt Type.

```
Group Calling:          >
Make a selection
Hunt Type       Queue Alarm
DelayAnnce      Xtnl Alert
GrpCoverage     Overflow
Message         Members
Exit            Line/Pool
```

F1

▶ 5. Enter the extension number of the calling group.

```
Group Calling:
Enter extension number
of group



Backspace
Exit            Enter
```

Dial or type [*nnnn*].

▶ 6. Save your entry.

Select Enter. F10

▶ 7. Specify the hunt pattern.

```
Group Calling xxxx:
Select one
Circular
Linear
Most Idle
                Next
Exit            Enter
```

xxxx = number entered in Step 5

Select Circular or F1
Linear or. F2
Most Idle F3

Console/Display Instructions	Additional Information	PC
▶ **8. Continue to assign a hunt pattern to another calling group or go to Step 9.**		
Select Next.		F9
	Return to Step 7 to continue programming. The next calling group is displayed on Line 1.	
▶ **9. Save your entry.**		
Select Enter.		F10
▶ **10. Return to the System Programming menu.**		
Select Exit three times.		F5 F5 F5

Group Calling Delay Announcements

Use this procedure to designate the announcement devices used to play messages to callers while they are waiting in the queue.

Two announcement devices can be designated for each calling group; however, more than one calling group can use the same announcement device. The extensions to which the delay announcement devices are connected should not be programmed as a calling group member.

If the extension jack or MFM was previously programmed as a regular extension, you must remove all line/trunk button assignments before you designate the extension jack as a delay announcement device.

NOTE:
In Release 6.0 and later systems (Hybrid/PBX mode only), a delay announcement device must be in the local system, it cannot be shared by non-local private networked systems.

Summary: Group Calling Delay Announcement

Programmable by	System Manager
Mode	All
Idle Condition	Not required
Planning Form	Form 7d, Group Calling
Factory Setting	No delay announcement devices are assigned
Valid Entries	Primary Announcement, Secondary Announcement
Inspect	No
Copy Option	No

Console Procedure Extensions→**More**→Grp Calling→DelayAnnce→ Dial calling group ext. no.→Enter→Primary Announcement or Secondary Announcement→Enter Extension number of Announcement device→Enter→Exit→Exit→Exit

PC Procedure [F6]→[PgUp]→[F4]→[F2]→Type calling group ext. no.→ [F10]→[F1] or [F2]→Type ext. no. of announcement device→ [F10]→[F5]→[F5]

Procedure: Group Calling Delay Announcements

Console Display/Instructions	Additional Information	PC
▶ **1. Select the Extensions menu.**		
System Programming: > Make a selection System Extensions SysRenumber Options Operator Tables LinesTrunks AuxEquip Exit NightSrvce		[F6]
▶ **2. Go to the second screen of the Extensions menu.**		
Extensions: > Make a selection LinesTrunks RestrctCopy Line Copy Account Dial OutCd BIS/HFAI Restriction Call Pickup Exit VoiceSignl	Press **More**.	[PgUp]
▶ **3. Select Group Calling.**		
Extensions: Make a selection Ext Status ARS Restrct Group Page Mic Disable Group Cover Remote Frwd Grp Calling Auth Code Exit Delay Frwd		[F4]

Console/Display Instructions	Additional Information	PC

4. Select Delay Announcement.

```
Group Calling:
Make a selection
Hunt Type        Queue Alarm
DelayAnnce       Xtnl Alert
GrpCoverage      Overflow
Message          Members
Exit             Line/Pool
```

F2

5. Enter the extension number of the calling group.

```
GrpCall Delay Announce:
Enter extension number
of Group
nnnn

Backspace
Exit             Enter
```

SP: “Enter an extension.”

6. Save your entry.

Select Enter. F10

7. Select Primary Announcements or Secondary Announcement.

```
Group Calling xxxx:
Select one
Primary Announcements
Secondary Announcement
Announcement Interval
Repeat Announcement
Exit
```

F1
F2

8. Enter the extension number of the announcement device.

```
Group Calling xxxx:
Enter extension numbers
of XXXXXXX Announcements
nnnn
                 Delete
Backspace        Next
Exit             Enter
```

announcement device
XXXXXXX = Primary or Second

SP: “Enter an extension.”

Console/Display Instructions	Additional Information	PC
▶ 9. Assign or remove a delay announcement device extension from the calling group.		
Select Enter or Delete.		F10 F8
	You may continue to assign or remove delay announcement device extensions from the calling group by repeating Steps 5 through 8.	
▶ 10. Continue to assign the delay announcement device extension to another calling group or go to Step 11.		
Select Next.		F9
	Return to Step 7 to continue programming. The next calling group is displayed on Line 1.	
▶ 11. Return to the System Programming menu.		
Select Exit twice.		F5 F5

Group Calling Announcement Interval

Use this procedure to set the delay before the secondary announcement is played and/or repeated.

Summary: Group Calling Announcement Interval

Programmable by	System Manager
Mode	All
Idle Condition	Not required
Planning Form	Form 7d, Group Calling
Factory Setting	0 (disabled)
Valid Entries	0-900 seconds
Inspect	No
Copy Option	No
Console Procedure	Extensions→**More**→Grp Calling→DelayAnnce→ Dial calling group ext. no.→Announcement Interval→ Enter the Announcement Interval →Enter→Exit→Exit
PC Procedure	F6 →PgUp→F4→F2→Type calling group ext. no.→ F3 →Type the Announcement Interval→ F10 →F5→F5

Procedure: Group Calling Announcement Interval

Console Display/Instructions	Additional Information	PC
1. Select the Extensions menu.		
System Programming: > Make a selection System Extensions SysRenumber Options Operator Tables LinesTrunks AuxEquip Exit NightSrvce		F6
2. Go to the second screen of the Extensions menu.		
Extensions: > Make a selection LinesTrunks RestrctCopy Line Copy Account Dial OutCd BIS/HFAI Restriction Call Pickup Exit VoiceSignl	Press **More**.	PgUp
3. Select Group Calling.		
Extensions: Make a selection Ext Status ARS Restrct Group Page Mic Disable Group Cover Remote Frwd Grp Calling Auth Code Exit Delay Frwd		F4
4. Select Delay Announcement.		
Group Calling: Make a selection Hunt Type Queue Alarm DelayAnnce Xtnl Alert GrpCoverage Overflow Message Members Exit Line/Pool		F2

Console/Display Instructions **Additional Information** **PC**

▶ **5. Enter the extension number of the calling group.**

```
GrpCall Delay Announce:
Enter extension number
of Group
nnnn

Backspace
Exit            Enter
```

SP: ‘Enter an extension.”

▶ **6. Save your entry.**

Select Enter. F10

▶ **7. Select Announcement Interval.**

```
Group Calling xxxx:
Select one:
Primary Announcements
Secondary Announcement
Announcement Interval
Repeat Announcement
Exit
```

F3

▶ **8. Enter the Announcement delay interval.**

```
Group Calling xxxx:
Enter interval between
Announcements (0-900 sec)
nnn

Backspace       Next
Exit            Enter
```

nnn =announcement delay interval

Enter the announcement delay interval.

▶ **9. Assign announcement delay interval to the calling group.**

Select Enter. F10

▶ **10. Return to the System Programming menu.**

Select Exit twice. F5 F5

Group Calling Repeat Announcement

Use this procedure to set the secondary announcement to repeat after the Announcement Interval.

Summary: Group Calling Repeat Announcement

Programmable by	System Manager
Mode	All
Idle Condition	Not required
Planning Form	Form 7d, Group Calling
Factory Setting	No repeat
Valid Entries	Yes, No
Inspect	No
Copy Option	No
Console Procedure	Extensions→**More**→Grp Calling→DelayAnnce→Dial calling group ext. no.→Enter→Repeat Announcement→ Yes or No→Enter→Exit→Exit
PC Procedure	F6 →PgUp→F4→F2→F4→Type calling group ext. no.→F2 or F3→F10→F5→F5

Procedure: Group Calling Repeat Announcement

Console Display/Instructions	Additional Information	PC
▶ **1. Select the Extensions menu.**		
System Programming: > Make a selection System Extensions SysRenumber Options Operator Tables LinesTrunks AuxEquip Exit NightSrvce		F6

Console/Display Instructions **Additional Information** **PC**

▶ 2. Go to the second screen of the Extensions menu.

```
Extensions:              >
Make a selection
LinesTrunks      RestrctCopy
Line Copy        Account
Dial OutCd       BIS/HFAI
Restriction      Call Pickup
Exit             VoiceSignl
```

Press **More**. PgUp

▶ 3. Select Group Calling.

```
Extensions:
Make a selection
Ext Status       ARS Restrct
Group Page       Mic Disable
Group Cover      Remote Frwd
Grp Calling      Auth Code
Exit             Delay Frwd
```

F4

▶ 4. Select Delay Announcement.

```
Group Calling:
Make a selection
Hunt Type        Queue Alarm
DelayAnnce       Xtnl Alert
GrpCoverage      Overflow
Message          Members
Exit             Line/Pool
```

F2

▶ 5. Enter the extension number of the calling group.

```
GrpCall Delay Announce:
Enter extension number
of Group
nnnn

Backspace
Exit             Enter
```

SP: ‘Enter an extension.”

▶ 6. Save your entry.

Select Enter. F10

Console/Display Instructions **Additional Information** **PC**

▶ **7. Select Repeat announcement.**

```
Group Calling xxxx:
Select one:
Primary Announcements
Secondary Announcement
Announcement Interval
Repeat Announcement
Exit
```

F4

▶ **8. Enter the Yes or No.**

```
Group Calling xxxx:
Repeat Secondary
Announcement
Yes
No
                Next
Exit            Enter
```

xxxx =calling group ext. no. from Step 5

F2

F3

▶ **9. Assign repeat announcement option for the calling group.**

Select Enter. F10

▶ **10. Return to the System Programming menu.**

Select Exit twice. F5 F5

Group Coverage Receiver

Use this procedure to assign or remove a calling group as a receiver for a coverage group.

Calling group member assignments must be made before you assign the group as a receiver for a coverage group.

Summary: Group Coverage Receiver

Programmable by	System Manager
Mode	All
Idle Condition	Not required
Planning Form	Form 7c, Group Coverage
Factory Setting	Not applicable
Valid Entries	Group numbers
Inspect	Yes
Copy Option	No
Console Procedure	Extensions→**More**→Grp Calling→Grp Coverage→Dial calling group ext. no.→Enter→Dial coverage group no.→Enter→Exit→Exit→Exit
PC Procedure	F6→PgUp→F4→F3→Type calling group ext. no.→Type coverage group no.→F10→F5→F5→F5

Procedure: Group Coverage Receiver

Console Display/Instructions	Additional Information	PC
▶ **1. Select the Extensions menu.**		
System Programming: > Make a selection System Extensions SysRenumber Options Operator Tables LinesTrunks AuxEquip Exit NightSrvce		F6
▶ **2. Go to the second screen of the Extensions menu.**		
Extensions: > Make a selection LinesTrunks RestrctCopy Line Copy Account Dial OutCd BIS/HFAI Restriction Call Pickup Exit VoiceSignl	Press **More**.	PgUp

Console/Display Instructions **Additional Information** **PC**

▶ **3. Select Group Calling.**

```
Extensions:
Make a selection
Ext Status      ARS Restrct
Group Page      Mic Disable
Group Cover     Remote Frwd
Grp Calling     Auth Code
Exit            Delay Frwd
```

F4

▶ **4. Select Group Coverage.**

```
Group Calling:          >
Make a selection
Hunt Type       Queue Alarm
DelayAnnce      Xtnl Alert
GrpCoverage     Overflow
Message         Members
Exit            Line/Pool
```

F3

▶ **5. Enter the extension number of the calling group.**

```
Group Calling:
Enter extension number
of group


Backspace
Exit            Enter
```

Dial or type [*nnnn*].

▶ **6. Save your entry.**

Select Enter.

F10

▶ **7. Enter the coverage group for which you want to assign the calling group as receiver (*nn* = 1 to 30).**

```
Group Calling xxxx:
Enter coverage group
number (1-30)

                Delete
Backspace       Next
Exit            Enter
```

xxx = number entered in Step 5

Dial or type [*nn*].

Console/Display Instructions	Additional Information	PC
▶ **8. Assign or remove the coverage group as the receiver for the calling group.**		
Select Enter or Delete.		F10 F8
	You may continue to assign or remove additional coverage groups as the receiver for the calling group by repeating Steps 7 and 8.	
▶ **9. Continue to assign the coverage group as the receiver for another calling group or go to Step 10.**		
Select Next.		F9
	Return to Step 7 to continue programming. The next calling group is displayed on Line 1.	
▶ **10. Return to the System Programming menu.**		
Select Exit three times.		F5 F5 F5

Group Calling Overflow and Thresholds

Use this procedure to designate either another calling group or the QCC queue (Hybrid/PBX only) to receive overflow calls. This procedure also specifies overflow threshold and methods.

Call overflow occurs in one of the three following ways:

- The number of calls waiting in the queue for a calling group is equal to or greater than the programmed threshold (overflow threshold).
- The time that a call has spent in the queue exceeds the programmed timeout value (overflow threshold time).
- In Release 6.0 and later systems, a caller responds to a voice prompt by pressing the # key to indicate that his or her call should be handled as an overflow call. For example, a delay announcement may specify that a caller can press # to leave a message with voice mail or an operator.

If the overflow threshold time is set to 0 seconds (factory setting), then overflow by time is turned off. Prompt-based overflow distribution can co-exist with either or both of the other methods. Overflow distribution based on the number of calls in the queue or the time spent in the queue takes precedence over calls that go to overflow because of the caller's prompt.

Overflow coverage can be provided only by calling groups or the QCC queue (Hybrid/PBX only), not by individual extensions.

A calling group or the QCC queue (Hybrid/PBX only) can provide overflow coverage for more than one calling group; however, which group's calls go to an available member in the overflow calling group is unpredictable.

The factory-set extension number for the QCC Listed Directory Number is 800.

Summary: Group Calling Overflow and Thresholds

Programmable by	System Manager
Mode	All
Idle Condition	Not required
Planning Form	Form 7d, Group Calling
Factory Setting	Overflow coverage: none Threshold: 1 call Timeout: 0 sec Prompt-based overflow: Disabled
Valid Entries	Overflow coverage: Backup extension number Threshold: 1 to 99 calls Timeout: 0 to 900 seconds Prompt-based overflow: Enabled, Disabled
Inspect	No
Copy Option	No
Console Procedure	`Extensions`→**More**→`Grp Calling`→`Overflow`→ Dial calling group ext. no.→`Enter`→Dial overflow ext. no.→ `Enter`→`Number Based Overflow`→**Drop**→Dial no. of calls→`Enter`→`Time Based Overflow`→**Drop**→ Dial no. of seconds→`Enter`→`Prompt Based Overflow`→ `Yes` or `No`→`Enter`→`Exit`→`Exit`→`Exit`
PC Procedure	[F6]→[PgUp]→[F4]→[F8]→Type calling group ext. no.→ [F10]→Type overflow ext. no.→[F10]→[F1]→[Alt] + [P]→Type no. of calls→[F10]→[F2]→[Alt] + [P]→Type no. of seconds→ [F10]→[F3]→[F2] or [F3]→[F10]→[F5]→[F5]→[F5]

Procedure: Group Calling Overflow and Thresholds

Console Display/Instructions	Additional Information	PC

▶ 1. Select the Extensions menu.

```
System Programming:      >
Make a selection
System          Extensions
SysRenumber     Options
Operator        Tables
LinesTrunks     AuxEquip
Exit            NightSrvce
```

F6

▶ 2. Go to the second screen of the Extensions menu.

```
Extensions:              >
Make a selection
LinesTrunks     RestrctCopy
Line Copy       Account
Dial OutCd      BIS/HFAI
Restriction     Call Pickup
Exit            VoiceSignl
```

Press **More.** PgUp

▶ 3. Select Group Calling.

```
Extensions:
Make a selection
Ext Status      ARS Restrct
Group Page      Mic Disable
Group Cover     Remote Frwd
Grp Calling     Auth Code
Exit            Delay Frwd
```

F4

▶ 4. Select Overflow.

```
Group Calling:           >
Make a selection
Hunt Type       Queue Alarm
DelayAnnce      Xtnl Alert
GrpCoverage     Overflow
Message         Members
Exit            Line/Pool
```

F8

Console/Display Instructions **Additional Information** **PC**

▶ **5. Enter the extension of the calling group.**

```
Group Calling:
Enter extension number
of group



Backspace
Exit            Enter
```

Dial or type [*nnnn*].

▶ **6. Save your entry.**

Select Enter. F10

▶ **7. Erase the current extension of the calling group or the QCC Listed Directory Number (*xxxx*) providing coverage, if assigned.**

```
Group Calling xxxx:
Enter cover overflow
group number or QCC LDN
nnnn
                Delete
Backspace
Exit            Enter
```

xxxx = number entered in Step 5

Press **Drop**. Alt + P

▶ **8. Enter the extension of the calling group or the QCC Listed Directory Number you want to assign for overflow coverage.**

```
Group Calling xxxx:
Enter cover overflow
group number or QCC LDN
nnnn
                Delete
Backspace
Exit            Enter
```

xxxx = number entered in Step 5

Dial or type [*nnnn*].

Console/Display Instructions **Additional Information** **PC**

▶ 9. Assign or remove the group or directory as overflow backup coverage.

Select Enter or F10
Delete. F8

You may continue to assign or remove additional groups or directories as overflow backup coverage by repeating Steps 7 and 8.

If you do not want to change the current number of calls, timeout value, or prompt-based overflow setting, you have finished this procedure.
Go to Step 21.

If you do not want to change the current number of calls, but want to change the timeout value, go to Step 14.

▶ 10. Select Number Based Overflow.

```
Group Calling xxxx:
Select one
Number Based Overflow
Time Based Overflow
Prompt Based Overflow

Exit
```

xxxx = number entered in Step 5

F1

▶ 11. Erase the current number of calls (*nn*).

```
Group Calling xxxx:
Assign number of calls
before overflow (1-99)
nn

Backspace
Exit            Enter
```

xxxx = number entered in Step 5

Press **Drop**. Alt + P

▶ 12. Enter the number of calls in the queue before coverage (*nn* = 1 to 99).

Dial or type [*nn*]. ⇦

▶ 13. Save your entry.

Select Enter. F10

Console/Display Instructions	Additional Information	PC
▶ 14. Select Time Based Overflow.		
Group Calling *xxxx*: Select one Number Based Overflow Time Based Overflow Prompt Based Overflow Exit	*xxxx* = number entered in Step 5	F2
▶ 15. Erase the current timeout (*xxx*).		
Group Calling *xxxx*: Enter max timeout (sec) before overflow (0-900) *xxx* Backspace Exit Enter	*xxxx* = number entered in Step 5 Press **Drop**.	Alt + P
▶ 16. Enter the maximum time (in seconds) in the queue before coverage (*xxx* = 0 to 900).		
Dial or type [*xxx*].		↵
▶ 17. Save your entry.		
Select Enter.		F10
▶ 18. Select Prompt Based Overflow.		
Group Calling *xxxx*: Select one Number Based Overflow Time Based Overflow Prompt Based Overflow Exit	*xxxx* = number entered in Step 5	F3
▶ 19. Turn prompt-based overflow on or off.		
Group Calling *xxxx*: Activate Prompt Based Overflow? Yes No Next Exit Enter	*xxxx* = number entered in Step 5 Select Yes or No.	F2 F3

Console/Display Instructions	Additional Information	PC
▶ **20. Save your entry.**		
Select Enter to return to Step 10 or		F10
Next to return to Step 8.		F9
	You may change the overflow receiver by repeating Steps 7 and 8.	
▶ **21. Return to the System Programming menu.**		
Select Exit three times.		F5 F5 F5

Group Calling Message-Waiting Indicator

Use this procedure to designate the extension to receive message-waiting indications (MWIs) for the calling group.

Only one extension can be designated as a message-waiting receiver for each calling group; however, more than one calling group can use the same message-waiting receiver. The extension assigned as a message-waiting receiver does not have to be a member of the calling group.

Message-waiting indications cannot be sent to the extension assigned to the group unless this option is programmed. The message-waiting receiver cannot distinguish between messages left for the calling group and personal messages.

Summary: Group Calling Message-Waiting Indicator

Programmable by	System Manager
Mode	All
Idle Condition	Not required
Planning Form	Form 7d, Group Calling
Factory Setting	No message-waiting receiver assigned
Valid Entries	Extension number
Inspect	No
Copy Option	No
Console Procedure	Extensions→**More**→Grp Calling→Message→ Dial calling group ext. no.→Enter→Dial ext. no. for MWI receiver→Enter→Exit→Exit
PC Procedure	F6→PgUp→F4→F4→Type calling group ext. no.→ F10→Type ext. no. for MWI receiver→F10→F5→F5

Procedure: Group Calling Message-Waiting Indicator

Console Display/Instructions	Additional Information	PC
1. Select the Extensions menu.		
System Programming: >		
Make a selection		
System Extensions		
SysRenumber Options		
Operator Tables		
LinesTrunks AuxEquip		
Exit NightSrvce		F6
2. Go to the second screen of the Extensions menu.		
Extensions: >		
Make a selection		
LinesTrunks RestrctCopy		
Line Copy Account		
Dial OutCd BIS/HFAI		
Restriction Call Pickup		
Exit VoiceSignl	Press **More**.	PgUp
3. Select Group Calling.		
Extensions:		
Make a selection		
Ext Status ARS Restrct		
Group Page Mic Disable		
Group Cover Remote Frwd		
Grp Calling Auth Code		
Exit Delay Frwd		F4
4. Select Message-Waiting Receiver.		
Group Calling: >		
Make a selection		
Hunt Type Queue Alarm		
DelayAnnce Xtnl Alert		
GrpCoverage Overflow		
Message Members		
Exit Line/Pool		F4

Console/Display Instructions	Additional Information	PC
▶ **5. Enter the extension of the calling group.**		

`Group Calling:`
`Enter extension number`
`of group`
 	
`Backspace`
`Exit  Enter`
	Dial or type [*nnnn*].	↵

▶ **6. Save your entry.**		
Select `Enter`.		F10
▶ **7. Erase the current extension (*nnnn*).**		

`Group Calling` *xxxx*:
`Enter message waiting`
`extension`
nnnn
 	
`Backspace  Next`
`Exit  Enter`
	xxxx = number entered in Step 5
	
	Press **Drop**.
		Alt + P

▶ **8. Specify the extension.**		
SP: “Entering an Extension”		↵
▶ **9. Assign the extension as the receiver for the calling group.**		
Select `Enter` or `Next`		F10 F9
	Use `Next` to assign an extension as receiver for the next calling group. Return to Step 7.	
▶ **10. Return to the System Programming menu.**		
Select `Exit` twice.		F5 F5

Group Calling Calls-In-Queue Alarm Thresholds

Use this procedure to specify the number of unanswered calls that wait in the calling group queue before group members are notified with either an external alert (an external alert is turned on when the third threshold is met) or a light on the telephone. Group members are notified when the number of calls waiting in the queue is equal to or greater than the programmed thresholds as follows:

- First Threshold, flashing light
- Second Threshold, winking light
- Third Threshold, solid light

NOTE:
To configure only one threshold, set *all* thresholds to the same number. The LED states are off and on. To configure only two thresholds, set two of the thresholds to be the same number.

Summary: Group Calling Calls-In-Queue Alarm Thresholds

Programmable by	System Manager
Mode	All
Idle Condition	Not required
Planning Form	Form 7d, Group Calling
Factory Settings	1 call, for all Thresholds
Valid Entries	1 to 99
Inspect	No
Copy Option	No
Console Procedure	Extensions→**More**→Grp Calling→Queue Alarm→ Dial calling group ext. no.→Enter→Alarm Threshold 1 or Alarm Threshold 2 or Alarm Threshold 3→**Drop**→ Dial no. of calls→Enter→Exit→Exit
PC Procedure	[F6]→[PgUp]→[F4]→[F6]→Type calling group ext. no.→ [F10]→[Alt] + [P]→[F1] or [F2] or [F3]→Type no. of calls→ [F10]→[F5]→[F5]

Procedure: Group Calling Calls-In-Queue Alarm Thresholds

Console Display/Instructions	Additional Information	PC

1. Select the Extensions menu.

```
System Programming:      >
Make a selection
System          Extensions
SysRenumber     Options
Operator        Tables
LinesTrunks     AuxEquip
Exit            NightSrvce
```

F6

2. Go to the second screen of the Extensions menu.

```
Extensions:              >
Make a selection
LinesTrunks     RestrctCopy
Line Copy       Account
Dial OutCd      BIS/HFAI
Restriction     Call Pickup
Exit            VoiceSignl
```

Press **More**. PgUp

3. Select Group Calling.

```
Extensions:
Make a selection
Ext Status      ARS Restrct
Group Page      Mic Disable
Group Cover     Remote Frwd
Grp Calling     Auth Code
Exit            Delay Frwd
```

F4

4. Select Queue Alarm.

```
Group Calling:           >
Make a selection
Hunt Type       Queue Alarm
DelayAnnce      Xtnl Alert
GrpCoverage     Overflow
Message         Members
Exit            Line/Pool
```

F6

Console/Display Instructions **Additional Information** **PC**

▶ 5. Enter the extension of the calling group.

```
Group Calling:
Enter extension number
of group


Backspace
Exit            Enter
```

Dial or type [*nnnn*].

▶ 6. Save your entry.

Select Enter. F10

▶ 7. Select the Threshold number.

```
Group Calling xxxx:
Select one:
Alarm Threshold 1
Alarm Threshold 2
Alarm Threshold 3

Exit
```

F1
F2
F3

▶ 8. Erase the current number of calls (*nn*).

```
Group Calling xxxx:
Enter number calls
before alarm n (1-99)
nn

Backspace       Next
Exit            Enter
```

xxxx = number entered in Step 5
n = number of alarm threshold (1, 2, or 3)
nn = calls in queue before alarm is triggered.

Press **Drop**. Alt + P

▶ 9. Enter the number of calls to be in the queue before the alarm threshold notification (*nn* = 1 to 99).

Dial or type[*nn*].

▶ 10. Save your entry.

Select Enter or F10
Next. F9

Use Next program the next calling group. Return to Step 7.

▶ 11. Return to the System Programming menu.

Select Exit twice. F5 F5

Group Calling External Alert for Calls-In-Queue Alarm

Use this procedure to designate the external alert device used to notify calling group members when the number of calls in the queue reaches the programmed Threshold 3.

Only one external alert device can be designated for each calling group. Since the external alert signal is continuous, it is recommended that only light-type external alert devices be designated for the Calls-in-Queue alarm.

Summary: Group Calling External Alert for Calls-In-Queue Alarm

Programmable by	System Manager
Mode.	All
Idle Condition	Not required
Planning Form	Form 7d, Group Calling
Factory Setting	Not applicable
Valid Entries	Extension number
Inspect	No
Copy Option	No
Console Procedure	`Extensions`→**More**→`Grp Calling`→`Xtnl Alert`→ Dial calling group ext. no.→`Enter`→**Drop**→ Dial ext. no. for alert→`Enter`→`Exit`→`Exit`
PC Procedure	[F6]→[PgUp]→[F4]→[F7]→Type calling group ext. no.→ [F10]→[Alt] + [P]→Type ext. no. for alert→[F10]→[F5]→[F5]

Procedure: Group Calling External Alert for Calls-In-Queue Alarm

Console Display/Instructions	Additional Information	PC
1. Select the Extensions menu.		
System Programming: > Make a selection System Extensions SysRenumber Options Operator Tables LinesTrunks AuxEquip Exit NightSrvce		F6
2. Go to the second screen of the Extensions menu.		
Extensions: > Make a selection LinesTrunks RestrctCopy Line Copy Account Dial OutCd BIS/HFAI Restriction Call Pickup Exit VoiceSignl	Press **More**.	PgUp
3. Select Group Calling.		
Extensions: Make a selection Ext Status ARS Restrct Group Page Mic Disable Group Cover Remote Frwd Grp Calling Auth Code Exit Delay Frwd		F4
4. Select External Alert.		
Group Calling: > Make a selection Hunt Type Queue Alarm DelayAnnce Xtnl Alert GrpCoverage Overflow Message Members Exit Line/Pool		F7

Console/Display Instructions **Additional Information** **PC**

▶ 5. Enter the extension of the calling group.

```
Group Calling:
Enter extension number
of group



Backspace
Exit            Enter
```

Dial or type [*nn*].

▶ 6. Save your entry.

Select Enter. F10

▶ 7. Erase the current external alert extension (*nnnn*) if assigned.

```
Group Calling xxxx:
Enter external alert
extension
nnnn

Backspace       Next
Exit            Enter
```

xxxx = number entered in Step 5

Press **Drop**. Alt+P

▶ 8. Specify the extension (*nnnn*) for the alert.

If DSS is attached:

Toggle the red LED on or off as required. Go to Step 9.
On = extension is assigned as alert
Off = extension is not assigned

If no DSS is attached:

SP: “Entering an Extension”

▶ 9. Save your entry.

Select Enter or F10
Next. F9

Use Next to program the next calling group.
Return to Step 7.

▶ 10. Return to the System Programming menu.

Select Exit twice. F5 F5

Group Type

Use this procedure to determine whether or not the system automatically logs in members of a calling group after a power failure. This setting also determines the type of voice messaging interface when the calling group is used to connect voice messaging or automated attendant applications. The settings are listed below.

- **Automatic Log Out.** Used for calling groups to specify that the system does not automatically log in calling group members after a power failure. Calling group members must manually log themselves into the group.
- **Automatic Log In.** Used for calling groups that consist of fax machines or data workstations (also called data hunt groups) to specify that the system automatically logs in calling group members after a power failure. This setting can also be used for calling groups consisting of telephones.
- **Integrated VMI.** Used when a voice messaging system that requires special signaling for integrated operation (for example, MERLIN LEGEND Mail, Intuity AUDIX, AUDIX Voice Power*, IS II/III*, or MERLIN MAIL® Voice Messaging System*) is connected to one or more extension jacks assigned to a calling group. The system automatically logs in the group members after a power failure.
- **Generic VMI.** Used when a voice messaging system that does not need special signaling is connected to one or more extension jacks assigned to a calling group. The system automatically logs in the group members after a power failure.

NOTE:
In Release 3.1 and later, any port programmed as a VMI port is programmed with:

- Outward restriction on
- A factory set FRL of 0 (the most restrictive)
- A factory set Disallowed List (List 7) that includes the numbers frequently associated with fraud

If the system manager changes a VMI port to non-VMI port, the restrictions are not turned off. To remove restrictions, the system manager must change them thorough system programming.

* No longer orderable.

Summary: Group Type

Programmable by	System Manager
Mode	All
Idle Condition	Not required
Planning Form	Form 7d, Group Calling
Factory Setting	Automatic Log Out
Valid Entries	Automatic login, Automatic logout, Integrated VMI, Generic VMI
Inspect	No
Copy Option	No
Console Procedure	Extensions→**More**→Grp Calling→**More**→ Group Type→Dial calling group ext. no.→Enter→ Specify login type→Enter→Exit→Exit→Exit
PC Procedure	F6→PgUp→F4→PgUp→F1→Type calling group ext. no.→F10→Specify login type→F10→F5→F5→F5

Procedure: Group Type

Console Display/Instructions	Additional Information	PC
▶ **1. Select the Extensions menu.**		
System Programming: > Make a selection System Extensions SysRenumber Options Operator Tables LinesTrunks AuxEquip Exit NightSrvce		F6
▶ **2. Go to the second screen of the Extensions menu.**		
Extensions: > Make a selection LinesTrunks RestrctCopy Line Copy Account Dial OutCd BIS/HFAI Restriction Call Pickup Exit VoiceSignl	Press **More.**	PgUp

Console/Display Instructions	Additional Information	PC

▶ 3. Select Group Calling.

```
Extensions:
Make a selection
Ext Status      ARS Restrct
Group Page      Mic Disable
Group Cover     Remote Frwd
Grp Calling     Auth Code
Exit            Delay Frwd
```

F4

▶ 4. Go to the second screen of the Group Calling menu.

```
Group Calling:          >
Make a selection
Hunt Type       Queue Alarm
DelayAnnce      Xtnl Alert
GrpCoverage     Overflow
Message         Members
Exit            Line/Pool
```

Press **More**. PgUp

▶ 5. Select Group Type.

```
Group Calling:
Make a selection
Group Type
Queue Ctrl


Exit
```

F1

▶ 6. Enter the extension of the group.

```
Group Calling:
Enter extension number
of group


Backspace
Exit            Enter
```

Dial or type [*nnnn*].

▶ 7. Save your entry.

Select Enter. F10

Console/Display Instructions	Additional Information	PC
▶ 8. Specify the type of login for the group that occurs after a power failure.		
Group Calling *xxxx*: Select One Auto Login Auto Logout Integ VMI Generic VMI Next Exit Enter	*xxxx* = number entered in Step 6 Press the button or function key next to your selection.	
▶ 9. Save your entry.		
Select Enter or Next.		F10 F9
	Use Next to program the next calling group. Return to Step 8.	
▶ 10. Return to the System Programming menu.		
Select Exit three times.		F5 F5 F5

Queue Control

In Release 6.0 and later systems, the system manager can control the maximum number of calls allowed in the primary calling group queue for calls that arrive on the following types of facilities:

- DID (Direct Inward Dialing) and dial-in TIE
- PRI facilities programmed for dial-plan routing
- All calls transferred from a VMI (voice messaging interface) port
- Internal calls to the calling group
- Internal calls to the calling group through the QCC Position-Busy backup (PBB)
- Intrasystem calls to the calling group
- All private network dialed calls, including remote DID

When the number of the calls in queue reaches the programmed maximum, subsequent callers receive a busy signal.

NOTE:
Dial-in tie trunks, including private tandem tie trunks (Release 6.0 and later systems, Hybrid/PBX only) cannot be assigned directly to calling groups.

Remote-access calls to a calling group, coverage calls directed to a calling group, and all outside/CO calls are not eligible for queue control.

Queue control does not apply to calls received directly on any of the following facilities:

- Loop-start lines
- Ground-start lines/trunks
- Auto-in tie trunks
- BRI (Basic Rate Interface) channels
- T1 facilities emulating ground-start or loop-start lines/trunks
- PRI facilities programmed for line-appearance routing

When a call arrives on one of the above facilities, it is added to the calling group queue, even if that queue has reached or exceeded the programmed maximum number of calls. For example, if the maximum number of calling group calls is set to 40 and 40 calls have come in, subsequent callers on eligible facilities hear the busy tone. However, calls that come in on a LS line are added to the queue.

Summary: Queue Control

Programmable by	System Manager
Mode	All
Idle Condition	Not required
Planning Form	Form 7d, Group Calling
Factory Setting	99 calls
Valid Entries	0–99 (0 indicates no calls are queued)
Inspect	No
Copy Option	No
Console Procedure	`Extensions`→**More**→`Grp Calling`→**More**→ `Queue Ctrl`→Dial calling group ext. no.→`Enter`→Dial no. of calls allowed in queue→`Enter`→`Exit`→`Exit`→`Exit`
PC Procedure	[F6]→[PgUp]→[F4]→[PgUp]→[F2]→Type calling group ext. no→[F10]→Type no. of calls allowed in queue→[F10]→ [F5]→[F5]→[F5]

Procedure: Queue Control

Console Display/Instructions	Additional Information	PC
▶ **1. Select the Extensions menu.**		
System Programming: >		
Make a selection		
System Extensions		
SysRenumber Options		
Operator Tables		
LinesTrunks AuxEquip		
Exit NightSrvce		F6
▶ **2. Go to the second screen of the Extensions menu.**		
Extensions: >		
Make a selection		
LinesTrunks RestrctCopy		
Line Copy Account		
Dial OutCd BIS/HFAI		
Restriction Call Pickup		
Exit VoiceSignl	Press **More.**	PgUp
▶ **3. Select Group Calling.**		
Extensions:		
Make a selection		
Ext Status ARS Restrct		
Group Page Mic Disable		
Group Cover Remote Frwd		
Grp Calling Auth Code		
Exit Delay Frwd		F4
▶ **4. Go to the second screen of the Group Calling menu.**		
Group Calling: >		
Make a selection		
Hunt Type Queue Alarm		
DelayAnnce Xtnl Alert		
GrpCoverage Overflow		
Message Members		
Exit Line/Pool	Press **More**.	PgUp

Console/Display Instructions	Additional Information	PC

▶ 5. Select Queue Control.

```
Group Calling:
Make a selection
Group Type
Queue Ctrl


Exit
```

F2

▶ 6. Enter the extension number of the group.

```
Group Calling:
Enter extension number
of group


Backspace
Exit            Enter
```

Dial or type [*nnnn*].

▶ 7. Save your entry.

Select Enter. F10

▶ 8. Specify the number of calls in the queue before callers hear the busy signal (*nn* = 0 to 99).

```
Group Calling xxxx:
Assign number of calls
allowed in queue (0-99)


Backspace       Next
Exit            Enter
```

xxxx = number entered in Step 6

Dial or type [*nn*].

▶ 9. Save your entry.

Select Enter or F10
Next. F9

Use Next to program the next calling group.
Return to Step 6.

▶ 10. Return to the System Programming menu.

Select Exit three times. F5 F5 F5

System Features

This section contains programming summaries for the optional system features that affect all or most system users and includes the following:

- Transfer Return Time
- One-Touch Transfer/Hold
- Transfer Audible
- Type of Transfer
- Camp-On Return Time
- Call Park Return Time
- Delay Ring Interval
- Automatic Callback Interval
- Extension Status
- SMDR Language
- SMDR Call Report Format
- SMDR Call Length
- SMDR Calls Recorded on Call Report
- SMDR Account Code Format
- SMDR Talk Time
- SMDR UDP Calls Recorded on Call Report
- Inside Dial Tone
- Reminder Service Cancel
- Redirect Outside Calls to Unassigned Extension Numbers
- Host System Dial Codes for Behind Switch Mode
- Recall Timer
- Interdigit Timers
- Allowed Lists
- Assign Allowed Lists to Extensions
- Disallowed Lists
- Assign Disallowed Lists to Extensions

Transfer Return Time

Use this procedure to specify the number of times the telephone rings before a call transferred to another inside telephone is returned to the originator. A setting of 0 means that transferred calls are never returned to the originator.

NOTE:
The transfer return time should not be set to 0 in a system with single-line telephones.

The transfer return time should not be set to 0 in a system with single-line telephones.

Summary: Transfer Return Time

Programmable by	System Manager
Mode	All
Idle Condition	Not required
Planning Form	Form 8a, System Features
Factory Setting	4 rings
Valid Entries	0 to 9 rings
Inspect	No
Copy Option	No
Console Procedure	Options→Transfer→Return Time→**Drop**→ Dial no. of rings→Enter→Exit→Exit
PC Procedure	F7→F1→F1→Alt + P→Type no. of rings→ F10→F5→F5

Procedure: Transfer Return Time

Console Display/Instructions	Additional Information	PC
▶ **1. Select the Options menu.**		
System Programming: > Make a selection System Extensions SysRenumber Options Operator Tables LinesTrunks AuxEquip Exit NightSrvce		F7

Console/Display Instructions	Additional Information	PC

▶ 2. Select Transfer.

```
Options:                >
Make a selection
Transfer        Callback
CampOn          Ext Status
CallParkRtn     SMDR
Delay Ring      InsideDial
Exit            ReminderSrv
```

F1

▶ 3. Select Return Time.

```
Transfer
Make a selection
Return Time
One Touch
Audible
Type
Exit
```

F1

▶ 4. Erase the current number of rings (*x*).

```
Transfer Return:
Enter number rings (0-9)

x

Backspace
Exit            Enter
```

Press **Drop**. Alt + P

▶ 5. Enter the number of rings before a transferred call is returned to the originator (*n* = 0 to 9).

Use 0 to indicate that calls are not returned.

Dial or type [*n*].

▶ 6. Save your entry.

Select Enter. F10

▶ 7. Return to the System Programming menu.

Select Exit twice. F5 F5

One-Touch Transfer/One-Touch Hold

Use this procedure to assign either the One-Touch Transfer or One-Touch Hold feature.

One-Touch Transfer allows users to initiate transfers to another extension by pressing an Auto Dial or DSS button for that extension. If the One-Touch Transfer feature is assigned, you must also specify whether the transfer completion is manual (the user has to press another button to complete the transfer) or automatic (the transfer is completed automatically).

The One-Touch Transfer feature is not available on single-line telephones.

One-Touch Hold applies to incoming central office calls only. When the user presses an Auto Dial or DSS button to initiate a transfer, the outside caller is put on hold. The system automatically selects an intercom facility and dials the transfer destination. There is no transfer return function with this method. Consequently, if the transfer destination does not answer or is busy, the user who initiates the transfer must notify the outside caller, or the outside caller remains on hold.

One-Touch Hold is the factory setting in Behind Switch mode only.

Summary: One-Touch Transfer/Hold

Programmable by	System Manager
Mode	All
Idle Condition	Not required
Planning Form	Form 8a, System Features
Factory Setting	One-Touch Transfer, automatic completion (One-Touch Hold is the factory setting in Behind Switch mode.)
Valid Entries	Transfer, Hold
Inspect	No
Copy Option	No

Console Procedure	To program One-Touch Transfer:
	`Options→Transfer→One Touch→Transfer→ Enter→ Manual` or `Automatic→Enter→Exit→Exit`
	To program One-Touch Hold:
	`Options→Transfer→One Touch→Hold→Enter→ Exit→Exit`

PC Procedure	To program One-Touch Transfer: F7 → F1 → F2 → F1 → F10 → F1 or F2 → F10 → F5 → F5 To program One-Touch Hold: F7 → F1 → F2 → F2 → F10 → F5 → F5

Procedure: One-Touch Transfer/Hold

Console Display/Instructions	Additional Information	PC
1. Select the Options menu.		
System Programming: > Make a selection System Extensions SysRenumber Options Operator Tables LinesTrunks AuxEquip Exit NightSrvce		F7
2. Select Transfer.		
Options: > Make a selection Transfer Callback CampOn Ext Status CallParkRtn SMDR Delay Ring InsideDial Exit ReminderSrv		F1
3. Select One Touch.		
Transfer Make a selection Return Time One Touch Audible Type Exit		F2
4. Specify transfer or hold.		
One Touch Call Handling: Select One Transfer Hold Exit Enter	Select Transfer or Hold.	F1 F2

Console/Display Instructions	Additional Information	PC
▶ 5. Save your entry.		
Select Enter.		F10
	If you selected Transfer, continue with Step 6. If you selected Hold, you have finished this procedure. Go to Step 8.	
▶ 6. Specify manual or automatic transfer completion.		
Transfer Completion: Select one Manual Automatic Exit Enter		
	Select Manual or Automatic.	F1 F2
▶ 7. Save your entry.		
Select Enter.		F10
▶ 8. Return to the System Programming menu.		
Select Exit twice.		F5 F5

Transfer Audible

Use this procedure to specify whether an outside caller hears ringing (also called ringback) or Music on Hold while being transferred. Inside callers always hear ringback during a transfer.

NOTES:

1. If you use equipment that rebroadcasts music or other copyrighted materials, you may be required to obtain a copyright license from and pay license fees to a third party (such as the American Society of Composers, Artists, and Producers or Broadcast Music Incorporated). Magic on Hold requires no such license and can be purchased from Lucent Technologies.
2. In Release 6.0 and later systems, when extensions are programmed to use the Centrex Transfer via Remote Call Forwarding feature, do not program Music On Hold as the transfer audible. If Music On Hold is programmed in this case, a caller being transferred hears a click, three seconds of Music On Hold, a second click, silence for about 10 seconds, then ringback or a busy tone from the central office. This can confuse callers, who may then hang up.

Summary: Transfer Audible

Programmable by	System Manager
Mode	All
Idle Condition	Not required
Planning Form	Form 8a, System Features
Factory Setting	Music on Hold
Valid Entries	Music on Hold, Ringback
Inspect	No
Copy Option	No
Console Procedure	Options→Transfer→Audible→Music on Hold or Ringback→Enter→Exit→Exit
PC Procedure	F7 → F1 → F3 → F1 or F2 → F10 → F5 → F5

Procedure: Transfer Audible

Console Display/Instructions	Additional Information	PC
1. Select the Options menu.		
System Programming: > Make a selection System Extensions SysRenumber Options Operator Tables LinesTrunks AuxEquip Exit NightSrvce		F7
2. Select Transfer.		
Options: > Make a selection Transfer Callback CampOn Ext Status CallParkRtn SMDR Delay Ring InsideDial Exit ReminderSrv		F1

Console/Display Instructions	Additional Information	PC

3. Select Transfer Audible.

```
Transfer
Make a selection
Return Time
One Touch
Audible
Type
Exit
```

F3

4. Specify whether the outside caller hears music or ringing while being transferred.

```
Transfer Audible:
Select one
Music On Hold
Ringback

Exit          Enter
```

Select Music On Hold or Ringback. F1 F2

5. Save your entry.

Select Enter. F10

6. Return to the System Programming menu.

Select Exit twice. F5 F5

Type of Transfer

Use this procedure to specify whether the system automatically selects an Intercom or System Access Ring or Voice button when the **Transfer** button or an Auto Dial or DSS button (for One-Touch Transfer) is pressed.

Summary: Type of Transfer

Programmable by	System Manager
Mode	All
Idle Condition	Not required
Planning Form	Form 8a, System Features
Factory Setting	Ring button (Intercom or System Access) is automatically selected
Valid Entries	Voice Announce, Ring
Inspect	No

Copy Option	No
Console Procedure	Options→Transfer→Type→Voice Announce or Ring→ Enter→Exit→Exit
PC Procedure	F7 → F1 → F4 → F1 or F2 → F10 → F5 → F5

Procedure: Type of Transfer

Console Display/Instructions	Additional Information	PC

1. Select the Options menu.

```
System Programming:      >
Make a selection
System          Extensions
SysRenumber     Options
Operator        Tables
LinesTrunks     AuxEquip
Exit            NightSrvce
```

F7

2. Select Transfer.

```
Options:                 >
Make a selection
Transfer        Callback
CampOn          Ext Status
CallParkRtn     SMDR
Delay Ring      InsideDial
Exit            ReminderSrv
```

F1

3. Select Transfer Type.

```
Transfer
Make a selection
Return Time
One Touch
Audible
Type
Exit
```

F4

Console/Display Instructions	Additional Information	PC
▶ **4. Specify whether a voice or ring button is automatically selected.**		
Type of Transfer: Select one Voice Announce Ring Exit Enter	Select Voice Announce or Ring.	F1 F2
▶ **5. Save your entry.**		
Select Enter.		F10
▶ **6. Return to the System Programming menu.**		
Select Exit twice.		F5 F5

Camp-On Return Time

Use this procedure to specify the number of seconds before a camped-on call (a call transferred to a busy telephone with the Camp-On feature) is returned to the originator.

Summary Camp-On Return Time:

Programmable by	System Manager
Mode	All
Idle Condition	Not required
Planning Form	Form 6f, System Features
Factory Setting	90 seconds
Valid Entries	30 to 300 seconds, in 10-second increments
Inspect	No
Copy Option	No
Console Procedure	Options→CampOn→**Drop**→Dial no. of seconds→ Enter→ Exit
PC Procedure	F7→F2→Alt + P→Type no. of seconds→F10→F5

Procedure: Camp-On Return Time

Console Display/Instructions	Additional Information	PC
▶ **1. Select the Options menu.**		
System Programming: > Make a selection System Extensions SysRenumber Options Operator Tables LinesTrunks AuxEquip Exit NightSrvce		F7
▶ **2. Select Camp-On.**		
Options: > Make a selection Transfer Callback CampOn Ext Status CallParkRtn SMDR Delay Ring InsideDial Exit ReminderSrv		F2
▶ **3. Erase the current number of seconds (*xxx*).**		
Camp On: Enter number of seconds (30-300), increments 10) *xxx* Backspace Exit Enter	Press **Drop.**	Alt + P
▶ **4. Enter the number of seconds before a camped-on call returns to the originator (*nnn* = 30 to 300).**		
Dial or type [*nnn*].		↵
▶ **5. Save your entry.**		
Select Enter.		F10
▶ **6. Return to the System Programming menu.**		
Select Exit.		F5

Call Park Return Time

Use this procedure to specify the number of seconds before a call put on hold with the Park feature is returned to the originator.

Summary: Call Park Return Time

Programmable by	System Manager
Mode	All
Idle Condition	Not required
Planning Form	Form 8a, System Features
Factory Setting	180 seconds
Valid Entries	30 to 300 seconds, in 10-second increments
Inspect	No
Copy Option	No
Console Procedure	Options→CallParkRtn→**Drop**→Dial no. of seconds→Enter→Exit
PC Procedure	F7→F3→Alt + P→Type no. of seconds→F5→F5

Procedure: Call Park Return Time

Console Display/Instructions	Additional Information	PC
▶ **1. Select the Options menu.**		
System Programming: > Make a selection System Extensions SysRenumber Options Operator Tables LinesTrunks AuxEquip Exit NightSrvce		F7
▶ **2. Select Call Park Return.**		
Options: > Make a selection Transfer Callback CampOn Ext Status CallParkRtn SMDR Delay Ring InsideDial Exit ReminderSrv		F3

Console/Display Instructions	Additional Information	PC
▶ **3. Erase the current number of seconds (*xxx*).**		
Call Park Return Time: Enter time before return (30-300 sec increment 10) *xxx* Backspace Exit Enter	Press **Drop**.	Alt + P
▶ **4. Enter the number of seconds before a parked call returns to the originator (*nnn* = 30 to 300).**		
Dial or type [*nnn*].		⇐
▶ **5. Save your entry.**		
Select Enter.		F10
▶ **6. Return to the System Programming menu.**		
Select Exit.		F5

Delay Ring Interval

Use this procedure to specify the number of rings for the delay ring interval. The delay ring interval is applied when a primary, secondary, or group cover button is set to delayed ring.

NOTE:
This setting is for Release 4.0 and earlier systems. Use Primary Cover Ring Delay and Secondary Cover Ring Delay for Release 4.1 and later systems.

Summary: Delay Ring Interval

Programmable by	System Manager
Mode	All
Idle Condition	Not required
Planning Form	Form 8a, System Features
Factory Setting	2 rings
Valid Entries	1 to 6 rings
Inspect	No
Copy Option	No
Console Procedure	Options→Delay Ring→**Drop**→Dial no. of rings→Enter→Exit
PC Procedure	F7→F4→Alt + P→Type no. of rings→F10→F5

Procedure: Delay Ring Interval

Console Display/Instructions	Additional Information	PC
1. Select the Options menu.		
System Programming: > Make a selection System Extensions SysRenumber Options Operator Tables LinesTrunks AuxEquip Exit NightSrvce		F7
2. Select Delay Ring.		
Options: > Make a selection Transfer Callback CampOn Ext Status CallParkRtn SMDR Delay Ring InsideDial Exit ReminderSrv		F4
3. Erase the current number of rings (*x*).		
Delay Ring: Enter number rings (1-6) *x* Backspace Exit Enter	Press **Drop**.	Alt+P
4. Enter the number of rings for the delay ring interval (*n* = 1 to 6).		
Dial or type [*n*].		
5. Save your entry.		
Select Enter.		F10
6. Return to the System Programming menu.		
Select Exit.		F5

Automatic Callback Interval

Use this procedure to specify the number of times the telephone rings at the originator's telephone before the system cancels a Callback request.

Summary: Automatic Callback Interval

Programmable by	System Manager
Mode	All
Idle Condition	Not required
Planning Form	Form 8a, System Features
Factory Setting	3 rings
Valid Entries	1 to 6 rings
Inspect	No
Copy Option	No
Console Procedure	Options→Callback→**Drop**→Dial no. of rings→Enter→Exit
PC Procedure	F7→F6→Alt + P→Type no. of rings→F10→F5

Procedure: Automatic Callback Interval

Console Display/Instructions	Additional Information	PC
▶ **1. Select the Options menu.**		
System Programming: > Make a selection System Extensions SysRenumber Options Operator Tables LinesTrunks AuxEquip Exit NightSrvce		F7

Console/Display Instructions **Additional Information** **PC**

▶ 2. Select Automatic Callback Interval.

```
Options:                >
Make a selection
Transfer        Callback
CampOn          Ext Status
CallParkRtn     SMDR
Delay Ring      InsideDial
Exit            ReminderSrv
```

F6

▶ 3. Erase the current number of rings (*x*).

```
Automatic Callback:
Enter number callback
rings (1-6)
x

Backspace
Exit            Enter
```

Press **Drop**. Alt + P

▶ 4. Enter the number of rings before the system cancels the automatic callback request (*n* = 1 to 6).

Dial or type [*n*].

▶ 5. Save your entry.

Select Enter. F10

▶ 6. Return to the System Programming menu.

Select Exit. F5

Extension Status

Use this procedure to specify whether the Extension Status (ES) feature is used in Hotel mode or Group Calling/Call Management System (CMS) mode.

The calling mode affects the meaning of the LEDs and the use of Auto Dial or DSS buttons when the DLC operator position is in Extension Status mode.

In Hotel mode, telephones are restricted from making calls in Extension Status states 1 and 2 (ES1 and ES2). In Group Calling/CMS mode, ES states reflect member or agent status without restricting the telephones. In the Group Calling/CMS mode, the Extension Status feature is used by the agents to log in and out, and by the supervisor to see agent status.

Summary: Extension Status

Programmable by	System Manager
Mode	All
Idle Condition	Not required
Planning Form	Form 8a, System Features
Factory Setting	Group Calling/CMS mode
Valid Entries	Group Calling/CMS mode, Hotel mode
Inspect	No
Copy Option	No
Console Procedure	Options→Ext Status→Hotel or GrpCall/CMS→ Enter→Exit
PC Procedure	F7 → F7 → F1 or F2 → F10 → F5

Procedure: Extension Status

Console Display/Instructions	Additional Information	PC
▶ 1. Select the Options menu.		
System Programming: > Make a selection System Extensions SysRenumber Options Operator Tables LinesTrunks AuxEquip Exit NightSrvce		F7

Console/Display Instructions	Additional Information	PC
▶ 2. Select Extension Status.		
Options: > Make a selection Transfer Callback CampOn Ext Status CallParkRtn SMDR Delay Ring InsideDial Exit ReminderSrv		F7
▶ 3. Specify the extension status mode.		
Ext Status Button Type: Select one Hotel GrpCall/CMS Exit Enter	Select Hotel or GrpCall/CMS.	F1 F2
▶ 4. Save your entry.		
Select Enter.		F10
▶ 5. Return to the System Programming menu.		
Select Exit.		F5

SMDR Language

Use this procedure to change the language of the SMDR reports. It applies to Releases 1.1 and later only. The report language is initially set to the same as that set for the system language. See “System Language” on page 6.

Summary: SMDR Language

Programmable by	System Manager
Mode	All
Idle Condition	Not required
Planning Form	Form 1, System Planning
Factory Setting	English (matches System Language setting)
Valid Entries	English, French, Spanish
Inspect	No
Copy Option	No
Console Procedure	**More**→Language→SMDR→Select language→Enter→Exit
PC Procedure	PgUp→F6→F3→Select language →F10→F5

Procedure: SMDR Language

Console Display/Instructions	Additional Information	PC
▶ 1. Go to the second screen of the System Programming menu.		
System Programming: >		
Make a selection		
System Extensions		
SysRenumber Options		
Operator Tables		
LinesTrunks AuxEquip		
Exit NightSrvce	Press **More**.	PgUp
▶ 2. Select Language.		
System Programming:		
Make a selection		
Labeling Language		
Data		
Print		
Cntr-Prg		
Exit		F6
▶ 3. Select SMDR.		
Language:	Program the system language first.	
Make a selection	See “System Language” on page 6.	
SystemLang		
Extensions		
SMDR		
Printer		
Exit		F3
▶ 4. Specify the SMDR language.		
SMDR Language:		
Select one		
English		
French		
Spanish		
Exit Enter	Select English, French, or Spanish.	F1 F2 F3
▶ 5. Save your entry.		
Select Enter.		F10
▶ 6. Return to the System Programming menu.		
Select Exit.		F5

SMDR Call Report Format

Use this procedure to specify whether the SMDR call reports are printed in Basic format or ISDN format. In ISDN format, automatic number identification (ANI) or Caller ID information appears in the Calling Number field in place of IN (which appears in the Basic report format). The call recording type for these calls is I in ISDN format and C in Basic format.

ISDN format should be used only in conjunction with automatic number identification (ANI) or Caller ID service subscription.

Summary: SMDR Call Report Format

Programmable by	System Manager
Mode	All
Idle Condition	Not required
Planning Form	Form 8a, System Features
Factory Setting	Basic format
Valid Entries	Basic, ISDN
Inspect	No
Copy Option	No
Console Procedure	Options→SMDR→Format→Basic SMDR or ISDN SMDR→ Enter→Exit→Exit
PC Procedure	F7 → F8 → F1 → F1 or F2 → F10 → F5 → F5

Procedure: SMDR Call Report Format

Console Display/Instructions	Additional Information	PC
▶ 1. Select the Options menu.		
System Programming: > Make a selection System Extensions SysRenumber Options Operator Tables LinesTrunks AuxEquip Exit NightSrvce		F7

Console Display/Instructions **Additional Information** **PC**

▶ 2. Select SMDR.

```
Options:                >
Make a selection
Transfer        Callback
CampOn          Ext Status
CallParkRtn     SMDR
Delay Ring      InsideDial
Exit            ReminderSrv
```

F8

▶ 3. Select Call Report Format.

```
Station Message Record:
Make a selection
Format          Auth Code
Call Length     Talk Time
Call Report     UDP
New Page
Exit
```

F1

▶ 4. Specify a format for the SMDR reports.

```
SMDR Format:
Select one
Basic SMDR
ISDN SMDR

Exit            Enter
```

Select Basic SMDR or ISDN SMDR. F1 F2

▶ 5. Save your entry.

Select Enter. F10

▶ 6. Return to the System Programming menu.

Select Exit twice. F5 F5

SMDR Call Length

Use this procedure to set the minimum time length of a call before it is recorded on SMDR call reports.

NOTES:

1. If the majority of lines/trunks are PRI, the recommended call length is 1. See the *Feature Reference* for more information.
2. The outbound call of a Centrex Transfer via Remote Call Forwarding call will not be recorded unless the minimum time length is set to zero (0). The inbound Centrex call to the Principle User who has Centrex Transfer via Remote Call Forwarding will also not be recorded unless the minimum time length is 0.

Summary: SMDR Call Length

Programmable by	System Manager
Mode	All
Idle Condition	Not required
Planning Form	Form 8a, System Features
Factory Setting	40 seconds
Valid Entries	0 to 255 seconds
Inspect	No
Copy Option	No
Console Procedure	Options→SMDR→Call Length→**Drop**→ Dial no. of seconds→Enter→Exit→Exit
PC Procedure	F7→F8→F2→Alt + P→Type no. of seconds→ F10→F5→F5

Procedure: SMDR Call Length

Console Display/Instructions	Additional Information	PC
▶ **1. Select the Options menu.**		
System Programming: > Make a selection System Extensions SysRenumber Options Operator Tables LinesTrunks AuxEquip Exit NightSrvce		F7

Console Display/Instructions **Additional Information** **PC**

▶ **2. Select SMDR.**

```
Options:                >
Make a selection
Transfer        Callback
CampOn          Ext Status
CallParkRtn     SMDR
Delay Ring      InsideDial
Exit            ReminderSrv
```

F8

▶ **3. Select Call Length.**

```
Station Message Record:
Make a selection
Format          Auth Code
Call Length     Talk Time
Call Report     UDP
New Page
Exit
```

New Page inserts a page break in the report.

F2

▶ **4. Erase the current number of seconds (*xxx*).**

```
SMDR Minimum Time:
Enter minimum call time
(0-255)
xxx

Backspace
Exit            Enter
```

Press **Drop**. Alt + P

Enter the minimum number of seconds to elapse before calls are recorded on the SMDR reports (*nnn* = 0 to 255).

Dial or type [*nnn*].

▶ **5. Save your entry.**

Select Enter. F10

▶ **6. Return to the System Programming menu.**

Select Exit twice. F5 F5

SMDR Calls Recorded on Call Report

Use this procedure to specify whether SMDR information should be recorded for both incoming and outgoing non-private network calls or for outgoing non-private network calls only.

NOTE:
Refer to "SMDR UDP Calls Recorded on Call Report" on page 3–479 to program call recording for calls on private network tandem trunks.

Summary: SMDR Calls Recorded on Call Report

Programmable by	System Manager
Mode	All
Idle Condition	Not required
Planning Form	Form 8a, System Features
Factory Setting	Incoming and outgoing
Valid Entries	In/Out, Out Only
Inspect	No
Copy Option	No
Console Procedure	Options→SMDR→Call Report→In/Out or Out Only→Enter→Exit→Exit
PC Procedure	F7→F8→F3→F1 or F2→F10→F5→F5

Procedure: SMDR Calls Recorded on Call Report

Console Display/Instructions	Additional Information	PC
1. Select the Options menu.		
System Programming: > Make a selection System Extensions SysRenumber Options Operator Tables LinesTrunks AuxEquip Exit NightSrvce		F7

Console Display/Instructions **Additional Information** **PC**

2. Select SMDR.

```
Options:                >
Make a selection
Transfer        Callback
CampOn          Ext Status
CallParkRtn     SMDR
Delay Ring      InsideDial
Exit            ReminderSrv
```

F8

3. Select Call Report.

```
Station Message Record:
Make a selection
Format          Auth Code
Call Length     Talk Time
Call Report     UDP
New Page
Exit
```

New Page inserts a page break in the report.

F3

4. Specify whether SMDR information is recorded for both incoming and outgoing calls or for outgoing calls only.

```
SMDR Call Report:
Select one
In/Out
Out Only


Exit            Enter
```

Select In/Out or Out Only. F1 F2

5. Save your entry.

Select Enter. F10

6. Return to the System Programming menu.

Select Exit twice. F5 F5

SMDR Account Code Format

For calls made using an authorization code, SMDR can be programmed to have either the “home extension” or the actual authorization codes recorded in the Account Code field if no Account Code is entered. Account Code overrides the Authorization Code entry in the SMDR record when both features are used.

Summary: SMDR Account Code Format

Programmable by	System Manager
Mode	All
Idle Condition	Not required
Planning Form	Form 6h, Authorization Codes
Factory Setting	Home Extension Number
Valid Entries	Home Extension Number, Authorization Code
Inspect	No
Copy Option	No
Console Procedure	Options→SMDR→Auth Code→Home Extension Number or Authorization Code→Enter→Exit→Exit
PC Procedure	F7 → F8 → F6 → F1 or F2 → F10 → F5 → F5

Procedure: SMDR Account Code Format

Console Display/Instructions	Additional Information	PC
▶ 1. Select the Options menu.		
System Programming: > Make a selection System Extensions SysRenumber Options Operator Tables LinesTrunks AuxEquip Exit NightSrvce		F7

Console/Display Instructions **Additional Information** **PC**

▶ 2. Select SMDR.

```
Options:                >
Make a selection
Transfer        Callback
CampOn          Ext Status
CallParkRtn     SMDR
Delay Ring      InsideDial
Exit            ReminderSrv
```

F8

▶ 3. Select Authorization Code.

```
Station Message Record:
Make a selection
Format          Auth Code
Call Length     Talk Time
Call Report     UDP
New Page
Exit
```

New Page inserts a page break in the report.

F6

▶ 4. Specify whether the home extension number or the authorization code is recorded.

```
Account Code Format:
Select One
Home Extension Number
Auth Code
Authorization Code

Exit            Enter
```

Select Home Extension Number or Authorization Code

F1
F2

▶ 5. Save your entry.

Press Enter.

F10

SMDR Talk Time

In Release 4.2 and later systems, the Talk field was added to the SMDR call record. The talk field is designed for the MERLIN LEGEND Reporter application that is used to capture detailed information on incoming and outgoing voice and data calls with a special emphasis on calling groups. The talk field contains the talk-time duration—the amount of time (59:59 maximum) that a calling group agent spends on an incoming call including any actions that the agent takes while handling the call.

If your system includes a MERLIN LEGEND Reporter, the Talk Time option must be enabled. All other configurations must have the Talk Time option disabled.

Summary: SMDR Talk Time

Programmable by	System Manager
Mode	All
Idle Condition	Not required
Planning Form	8a, System Features
Factory Setting	Disabled
Valid Entries	Enable, Disable
Inspect	No
Copy Option	No
Console Procedure	Options→SMDR→Talk Time→Enable or Disable→Enter→Exit→Exit
PC Procedure	F7→F8→F7→F1 or F2→F10→F5→F5

Procedure: SMDR Talk Time

Console Display/Instructions	Additional Information	PC
1. Select the Options menu.		
System Programming: > Make a selection System Extensions SysRenumber Options Operator Tables LinesTrunks AuxEquip Exit NightSrvce		F7

Console/Display Instructions **Additional Information** **PC**

▶ 2. Select SMDR.

```
Options:                >
Make a selection
Transfer        Callback
CampOn          Ext Status
CallParkRtn     SMDR
Delay Ring      InsideDial
Exit            ReminderSrv
```

F8

▶ 3. Select Talk Time.

```
Station Message Record:
Make a selection
Format          Auth Code
Call Length     Talk Time
Call Report     UDP
New Page
Exit
```

F7

▶ 4. Specify whether you want Talk Time enabled or disabled.

```
SMDR Talk Time Report:
Select one
Enable
Disable


Exit            Enter
```

Select Enable or Disable

F1
F2

▶ 5. Save your entry.

Press Enter.

F10

SMDR UDP Calls Recorded on Call Report

Use this procedure to specify whether SMDR information should be recorded for both incoming and outgoing calls on private network tandem trunks, or if call recording will not be performed on private network calls.

NOTE:
Refer to "SMDR Calls Recorded on Call Report" on page 3–473 to program call recording for non-private network calls.

Summary: SMDR UDP Calls Recorded on Call Report

Programmable by	System Manager
Mode	All
Idle Condition	Not required
Planning Form	Form 8a, System Features
Factory Setting	Log Incoming/Outgoing
Valid Entries	Log Incoming/Outgoing, Log None
Inspect	No
Copy Option	No
Console Procedure	Options→SMDR→UDP→Log Incoming/Outgoing or Log None→Enter→Exit→Exit
PC Procedure	F7 → F8 → F8 → F1 or F2 → F10 → F5 → F5

Procedure: SMDR UDP Calls Recorded on Call Report

Console Display/Instructions	Additional Information	PC
1. Select the Options menu.		
System Programming: > Make a selection System Extensions SysRenumber Options Operator Tables LinesTrunks AuxEquip Exit NightSrvce		F7

Console Display/Instructions	Additional Information	PC

▶ 2. Select SMDR.

```
Options:                >
Make a selection
Transfer        Callback
CampOn          Ext Status
CallParkRtn     SMDR
Delay Ring      InsideDial
Exit            ReminderSrv
```

F8

▶ 3. Select UDP.

```
Station Message Record:
Make a selection
Format          Auth Code
Call Length     Talk Time
Call Report     UDP
New Page
Exit
```

New Page inserts a page break in the report.

F8

▶ 4. Specify whether SMDR information is recorded for both incoming and outgoing UDP calls or if UDP call information will not be recorded.

```
SMDR Report - UDP Calls:
Select one
Log Incoming/Outgoing
Log None


Exit            Enter
```

Select Log Incoming/Outgoing or Log None. F1 F2

▶ 5. Save your entry.

Select Enter. F10

▶ 6. Return to the System Programming menu.

Select Exit twice. F5 F5

Inside Dial Tone

Use this procedure to set the inside (system) dial tone to be either different from, or the same as, the outside line/trunk dial tone.

NOTE:
The inside dial tone must be the same as the outside dial tone when the internal dial tone is not recognized by software applications or modems.

Summary: Inside Dial Tone

Programmable by	System Manager
Mode	All
Idle Condition	Not required
Planning Form	Form 8a, System Features
Factory Setting	Inside dial tone is different from outside dial tone
Valid Entries	Inside, Outside
Inspect	No
Copy Option	No
Console Procedure	Options→InsideDial→Inside or Outside→ Enter→Exit
PC Procedure	F7 → F9 → F1 or F2 → F10 → F5

Procedure: Inside Dial Tone

Console/Display Instructions	Additional Information	PC
1. Select the Options menu.		
System Programming: > Make a selection System Extensions SysRenumber Options Operator Tables LinesTrunks AuxEquip Exit NightSrvce		F7

Console/Display Instructions **Additional Information** **PC**

▶ 2. Select Inside Dial Tone.

```
Options:                >
Make a selection
Transfer        Callback
CampOn          Ext Status
CallParkRtn     SMDR
Delay Ring      InsideDial
Exit            ReminderSrv
```

F9

▶ 3. Specify which dial tone you want for inside.

```
Intercom Dial Tone:
Select One
Inside
Outside

Exit            Enter
```

Select Inside or Outside. F1 F2

▶ 4. Save your entry.

Select Enter. F10

▶ 5. Return to the System Programming menu.

Select Exit. F5

Reminder Service Cancel

Use this procedure to set the time of day when all programmed Reminder Service calls are automatically canceled.

To deactivate Reminder Service Cancel, erase the currently programmed time and do not enter a new time.

Summary: Reminder Service Cancel

Programmable by	System Manager
Mode	All
Idle Condition	Not required
Planning Form	Form 8a, System Features
Factory Setting	Not applicable
Valid Entries	0000 to 2359
Inspect	No

Copy Option	No
Console Procedure	To deactivate Reminder Service Cancel: Options→Reminder Srv→**Drop**→Enter→Exit To set Reminder Service Cancel time: Options→Reminder Srv→**Drop**→Dial time→ Enter→Exit
PC Procedure	To deactivate Reminder Service Cancel: F7 →F10 →Alt + P →F10 →F5 To set Reminder Service Cancel time: F7 →F10 →Alt + P →Type time→F10 →F5

Procedure: Reminder Service Cancel

Console Display/Instructions	Additional Information	PC
▶ **1. Select the Options menu.**		
System Programming: > Make a selection System Extensions SysRenumber Options Operator Tables LinesTrunks AuxEquip Exit NightSrvce		F7
▶ **2. Select Reminder Service Cancel.**		
Options: > Make a selection Transfer Callback CampOn Ext Status CallParkRtn SMDR Delay Ring InsideDial Exit ReminderSrv		F10

Console/Display Instructions	Additional Information	PC
▶ **3. Erase the current reminder service time (*xxxx*) if assigned.**		
Reminder Service Cancel: Enter hour (00-23) and minute (00-59) *xxxx* Backspace Exit Enter	Press **Drop**.	Alt + P
▶ **4. Enter the time of day when all reminders are to be canceled (*hh* = 00 to 23 and mm = 00 to 59).**		
	To deactivate Reminder Service Cancel, do not enter a time. Go to Step 5.	
Dial or type [*hhmm*].		⇐
▶ **5. Save your entry.**		
Select Enter.		F10
▶ **6. Return to the System Programming menu.**		
Select Exit.		F5

Redirect Outside Calls to Unassigned Extension Numbers

Use this procedure to specify the extension number to receive redirected calls. Redirected calls include calls made to unassigned numbers by remote access users, by users on DID trunks (Hybrid/PBX only), or by users on dial-in tie trunks. Calls can be redirected to the following locations:

- The QCC queue (Hybrid/PBX only)
- Another extension number
- A calling group

This setting does not affect calls received on DID trunks if you have specified that calls to unassigned DID extensions are to receive a fast busy signal. See “Invalid Destination” on page 181.

Summary: Redirect Outside Calls to Unassigned Extension Numbers

Programmable by	System Manager
Mode	All
Idle Condition	Not required
Planning Form	Form 8a, System Features
Factory Setting	Extension number of primary operator
Valid Entries	QCC queue extension number, other extension number
Inspect	No
Copy Option	No
Console Procedure	To select QCC queue: Options→**More**→Unassigned→QCC Queue→ Enter→Exit To select extension or calling group: Options→**More**→Unassigned→Extension or Grp Calling→Enter→Dial ext. no. or group no.→ Enter→Exit
PC Procedure	To select QCC queue: F7 →PgUp→F1→F1→F10→F5 To select extension or calling group: F7 →PgUp→F1→F2 or F3 →Type ext. no. or group no.→F10→F5

Procedure: Redirect Outside Calls to Unassigned Extension Numbers

Console Display/Instructions	Additional Information	PC
▶ **1. Select the Options menu.**		
System Programming: > Make a selection System Extensions SysRenumber Options Operator Tables LinesTrunks AuxEquip Exit NightSrvce		F7

Console/Display Instructions **Additional Information** **PC**

▶ 2. Go to the second screen of the Options menu.

```
Options:                >
Make a selection
Transfer        Callback
CampOn          Ext Status
CallParkRtn     SMDR
Delay Ring      InsideDial
Exit            ReminderSrv
```

Press **More**. PgUp

▶ 3. Select Redirect Unassigned Extension Numbers.

```
Options:
Make a selection
Unassigned      Cover Delay
BehndSwitch     Inter-Digit
RecallTimer     Ringing Freq
Rotary          SecNT Timer
Exit
```

F1

▶ 4. Specify where to redirect calls made to unassigned extension numbers.

```
Call Unassigned Ext:
Select one
ACC Queue
Extension
Grp Calling

Exit            Enter
```

Select ACC Queue, F1
Extension, or F2
Grp Calling. F3

▶ 5. Save your entry. ● ◆

Select Enter. F10

If you selected ACC Queue, you have finished this procedure. Go to Step 6.

If you selected Extension, go to ● Extension Procedure.

If you selected Grp Calling, go to ◆ Group Calling Procedure.

▶ 6. Return to the System Programming menu.

Select Exit. F5

● Extension Procedure

Console Display/Instructions	Additional Information	PC

▶ **1. Specify the extension to which calls are to be redirected.**

```
Unassign Calls Ext:
Enter extension



Backspace
Exit            Enter
```

SP: “Entering an Extension”

▶ **2. Save your entry.**

Select Enter. F10

▶ **3. Return to the System Programming menu.**

Select Exit. F5

◆ Group Calling Procedure

Console/Display Instructions	Additional Information	PC

▶ **1. Enter the extension of the calling group to which calls are to be redirected.**

```
Unassign Calls Grp Call:
Enter extension number
of group



Backspace
Exit            Enter
```

Dial or type [*nnnn*].

▶ **2. Save your entry.**

Select Enter. F10

▶ **3. Return to the System Programming menu.**

Select Exit. F5

Host System Dial Codes for Behind Switch Mode

Use this procedure to assign the host system dial codes for the Transfer, Conference, and Drop features.

When multiline telephone users press the **Transfer**, **Conference**, or **Drop** button, a signal is sent to the host service and the communications system features are not accessed. Assigning dial codes to these features ensures that users can take advantage of them through the host system.

NOTE:
This procedure applies to Behind Switch mode only.

Summary: Host System Dial Codes for Behind Switch Mode

Programmable by	System Manager
Mode	Behind Switch
Idle Condition	Not required
Planning Form	Form 1, System Planning
Factory Setting	No host dial codes are assigned
Valid Entries	Host system dial code of up to six digits
Inspect	No
Copy Option	No
Console Procedure	Options→**More**→BehndSwitch→Select feature→**Drop**→ Dial host system dial code→Enter→Exit→Exit
PC Procedure	[F7]→[PgUp]→[F2]→Select feature→[Alt] + [P]→ Type host system dial code→[F10]→[F5]→[F5]

Procedure: Host System Dial Codes for Behind Switch Mode

Console Display/Instructions	Additional Information	PC
▶ **1. Select the Options menu.**		
System Programming: > Make a selection System Extensions SysRenumber Options Operator Tables LinesTrunks AuxEquip Exit NightSrvce		[F7]

Console/Display Instructions	Additional Information	PC

▶ 2. Go to the second screen of the Options menu.

```
Options:                >
Make a selection
Transfer        Callback
CampOn          Ext Status
CallParkRtn     SMDR
Delay Ring      InsideDial
Exit            ReminderSrv
```

Press **More**. PgUp

▶ 3. Select Behind Switch.

```
Options:
Make a selection
Unassigned      Cover Delay
BehndSwitch     Inter-Digit
RecallTimer     Ringing Freq
Rotary          SecNT Timer
Exit
```

F2

▶ 4. Specify the feature to which you want to assign a dial code.

```
Behind Switch:
Make a selection
Transfer
Conference
Drop

Exit
```

Select Transfer, F1
Conference, or F2
Drop. F3

▶ 5. Erase the current host system dial code (*xxxxxx*).

```
Program ****:
Enter host system dial
code
xxxxxx

Backspace
Exit            Enter
```

**** = option name selected in Step 4

Press **Drop.** Alt+P

▶ 6. Enter the host system dial code (up to 6 digits).

Dial or type [*n*].

Console/Display Instructions	Additional Information	PC
▶ **7. Save your entry.**		
Select Enter.		F10
▶ **8. Return to the System Programming menu.**		
Select Exit twice.		F5 F5

Recall Timer

Use this procedure to designate the length of the timed flash that is sent when Recall is used to disconnect a call and get a new dial tone without hanging up. Both the interval of the timed flash and how Recall works depend on the type of telephone and system operating mode.

The recall timer should be reset if multiline telephone users experience either of the following problems:

- Nothing happens when the user presses the Recall button on an outside call. This indicates that the interval is too short and should be increased to 650 milliseconds or one second.
- In a system operating in Behind Switch mode, the call is disconnected when the user presses the Recall button on an outside call. This indicates that the interval is too long and should be decreased to 350 milliseconds.

Summary: Recall Timer

Programmable by	System Manager
Mode	All
Idle Condition	Not required
Planning Form	Form 8a, System Features
Factory Setting	450 ms
Valid Entries	350 ms, 450 ms, 650 ms, 1 second
Inspect	No
Copy Option	No
Console Procedure	Options→**More**→RecallTimer→Select time→Enter→Exit
PC Procedure	F7→PgUp→F3→Select time→F10→F5

Procedure: Recall Timer

Console Display/Instructions	Additional Information	PC
1. Select the Options menu.		
System Programming: > Make a selection System Extensions SysRenumber Options Operator Tables LinesTrunks AuxEquip Exit NightSrvce		F7
2. Go to the second screen of the Options menu.		
Options: > Make a selection Transfer Callback CampOn Ext Status CallParkRtn SMDR Delay Ring InsideDial Exit ReminderSrv	Press **More**.	PgUp
3. Select Recall Timer.		
Options: Make a selection Unassigned Cover Delay BehndSwitch Inter-Digit RecallTimer Ringing Freq Rotary SecDT Timer Exit		F3
4. Specify a timer setting.		
Recall Timer: Select one 350 ms 450 ms 650 ms 1 sec Exit Enter	Press the button or function key next to your selection.	
5. Save your entry.		
Select Enter.		F10
6. Return to the System Programming menu.		
Select Exit.		F5

Interdigit Timers

Programming for interdigit timers is reserved for Lucent Technologies technical support personnel or authorized dealers.

Interdigit timers are used by the MERLIN LEGEND system to determine when a user originating an outside call has completed dialing the digits. The information is necessary to allow the system to perform subsequent operations. You should not change the factory settings for interdigit timers unless instructed to do so by Lucent Technologies technical support or by an authorized dealer.

Allowed Lists

Use this procedure to establish Allowed Lists. These lists are telephone numbers that can be dialed from specified telephones, regardless of any calling restrictions assigned to the telephones.

A maximum of eight lists (numbered 0 through 7) with a maximum of 10 numbers each (numbered 0 through 9) are allowed. Each allowed number can be no more than six digits (an area code plus an exchange) or six digits with a leading 1, where required.

If you program 0 as the first digit of a list entry, any toll restriction assigned to the extension is removed for calls that can be placed by a toll operator.

Special characters (such as Pause) are not permitted in Allowed List entries.

Summary: Allowed Lists

Programmable by	System Manager
Mode	All
Idle Condition	Not required
Planning Form	Form 6g, Call Restriction Assignments and Lists
Factory Setting	Not applicable
Valid Entries	Area code/exchange (1- to 6-digits with leading 1, if necessary)
Inspect	No
Copy Option	No
Console Procedure	`Tables`→`AllowList`→Dial list no. and entry no.→ `Enter`→**Drop**→Dial no.→`Enter`→`Exit`
PC Procedure	[F8]→[F1]→Type list no. and entry no.→[F10]→ [Alt] + [P]→Type no.→[F10]→[F5]

Procedure: Allowed Lists

Console Display/Instructions	Additional Information	PC
▶ **1. Select the Tables menu.**		
System Programming: > Make a selection System Extensions SysRenumber Options Operator Tables LinesTrunks AuxEquip Exit NightSrvce		F8
▶ **2. Select Allowed List.**		
Tables: > Make a selection AllowList ARS AllowTo UDP Routing Disallow DisallowTo Exit		F1
▶ **3. Enter the list (*l* = 0 to 7) and entry (*e* = 0 to 9) numbers.**		
Allowed List: Enter list (0-7) and entry (0-9) Backspace Exit Enter	If you do not enter a list number, List 0 is assigned. Dial or type [*le*].	
▶ **4. Save your entry.**		
Select Enter.		F10
▶ **5. Erase the current area code/exchange (*nnnnnn*).**		
Allowed List *l* Entry *e* : Enter list item *nnnnnn* Backspace Next Exit Enter	*l* = list number entered in Step 3 *e* = entry number entered in Step 3 Press **Drop.**	Alt + P

Console/Display Instructions	Additional Information	PC
▶ **6. Enter the allowed area code/exchange (up to 6 digits).**		
Dial or type [*n*].		
▶ **7. Save your entry.**		
Select Enter or		F10
Next.		F9
	Use Next to enter the next number on the list displayed on Line 1. Return to Step 7.	
▶ **8. Return to the System Programming menu.**		
Select Exit.		F5

Assign Allowed Lists to Extensions

Use this procedure to assign individual extensions access to established Allowed Lists. More than one Allowed List can be assigned to an extension.

Summary: Assign Allowed Lists to Extensions

Programmable by	System Manager
Mode	All
Idle Condition	Not required
Planning Form	Form 6g, Call Restriction Assignments and Lists
Factory Setting	Not applicable
Valid Entries	0 to 7
Inspect	Yes
Copy Option	Yes
Console Procedure	Tables→AllowTo→Dial list no.→Enter→Dial ext. no.→Enter→Exit→Exit
PC Procedure	F8→F2→Type list no.→F10→Type ext. no.→F10→F5→F5

Procedure: Assign Allowed Lists to Extensions

Console Display/Instructions	Additional Information	PC

1. Select the Tables menu.

```
System Programming:      >
Make a selection
System          Extensions
SysRenumber     Options
Operator        Tables
LinesTrunks     AuxEquip
Exit            NightSrvce
```

F8

2. Select Allowed To List.

```
Tables:                  >
Make a selection
AllowList       ARS
AllowTo         UDP Routing
Disallow
DisallowTo
Exit
```

F2

3. Enter the number of the list (*n* = 0 to 7).

```
Allowed To List:
Enter list number (0-7)



Backspace
Exit            Enter
```

If you do not enter a list number, List 0 is assigned.

Dial or type [*n*].

4. Save your entry.

Select Enter.

F10

Console/Display Instructions **Additional Information** **PC**

▶ 5. Specify the extension to assign to the allowed list.

```
Allow To List x:
Enter extensions to list

                 Delete
Backspace        Next
Exit             Enter
```

x = list number entered in Step 3

If no DSS is attached:
SP: "Entering an Extension"

If DSS is attached:
Toggle the red LED on or off as required. Go to Step 7.
On = allowed list is assigned.
Off = allowed list is not assigned.

▶ 6. Assign or remove the extension from the allowed list.

Select Enter or F10
Delete. F8

You may continue to assign or remove the allowed list from additional extensions by repeating Steps 5 and 6.

▶ 7. Continue to assign extensions to the next allowed list or go to Step 8.

Select Next. F9

Return to Step 5. The next Allowed List is displayed on Line 1.

▶ 8. Return to the System Programming menu.

Select Exit twice. F5 F5

Disallowed Lists

Use this procedure to establish Disallowed Lists. These lists are telephone numbers that cannot be dialed from specified extensions (including unrestricted extensions).

A maximum of eight lists (numbered 0 through 7) with 10 entries each (numbered 0 through 9) is allowed. Each number can have a maximum of 11 digits, including wildcards. The Pause character (entered by pressing the **Hold** button) is used to designate a wildcard character, for example, to indicate that calls to a given exchange are restricted in every area code.

SECURITY ALERT:
Create a Disallowed List or use the pre-prepared Disallowed List number 7 (Release 3.1 and later systems only) to disallow dialing 0, 11, 10, 1700, 1809, 1900, and 976 or 1(wildcard)976. In Release 3.1 and later systems, Disallowed List number 7 does not include 800 and 1800 and 411 and 1411, but Lucent Technologies recommends that you add them. ***Assign all voice mail port extensions to this Disallowed List. Lucent Technologies recommends assigning Disallowed List number 7. This is an added layer of security, in case outward restriction is inadvertently removed.*** *(In Release 3.1 and later systems, voice messaging ports are assigned by default to Disallowed List number 7.)*

Summary: Disallowed Lists

Programmable by	System Manager
Mode	All
Idle Condition	Not required
Planning Form	Form 6g, Call Restriction Assignments and Lists
Factory Setting	List #7 containing the following: 0, 10, 11, 1809, 1700, 1900, 976, 1ppp976 (p = wildcard), *
Valid Entries	1- to 11-digits (including wildcards)
Inspect	No
Copy Option	No
Console Procedure	`Tables`→`Disallow`→Dial list no. and entry no.→`Enter`→ **Drop**→Dial no.→`Enter`→`Exit`
PC Procedure	[F8]→[F3]→Type list no. and entry no.→[F10]→[Alt] + [P]→ Type no.→[F10]→[F5]

Procedure: Disallowed Lists

Console Display/Instructions	Additional Information	PC

▶ 1. Select the Tables menu.

```
System Programming:      >
Make a selection
System          Extensions
SysRenumber     Options
Operator        Tables
LinesTrunks     AuxEquip
Exit            NightSrvce
```

F8

▶ 2. Select Disallowed List.

```
Tables:
Make a selection
AllowList       ARS
AllowTo         UDP Routing
Disallow
DisallowTo
Exit
```

F3

▶ 3. Specify the list (*l* = 0 to 7) and entry (*e* = 0 to 9) numbers.

```
Disallow List:
Enter list (0-7) and
entry (0-9)


Backspace
Exit            Enter
```

If you do not enter a list number, List 0 is assigned.

Dial or type [*le*].

▶ 4. Save your entry.

Select Enter.

F10

▶ 5. Erase the current telephone (*n*).

```
Disallow List l Entry e
Enter list item
(12 digits maximum)
nnnnn

Backspace       Next
Exit            Enter
```

l = list number entered in Step 3
e = entry number entered in Step 3

Press **Drop**.

Alt + P

Console/Display Instructions	Additional Information	PC
▶ **6. Enter the disallowed telephone number (n = up to 12 digits).**		
Dial or type [*n*].		
▶ **7. Continue to assign the next telephone number to the disallowed list or go to Step 8.**		
Select Next.		F9
	Use Next to assign the next entry to the disallowed list displayed on Line 1. Return to Step 5.	
▶ **8. Return to the System Programming menu.**		
Select Exit.		F5

Assign Disallowed Lists to Extensions

Use this procedure to assign established Disallowed Lists to individual extensions. Each restricted extension can be assigned to more than one list.

Summary: Assign Disallowed Lists to Extensions

Programmable by.	System Manager
Mode	All
Idle Condition	Not required
Planning Form	Form 6g, Call Restriction Assignments and Lists
Factory Setting	Not applicable
Valid Entries	0 to 7
Inspect	Yes
Copy Option	Yes
Console Procedure	Tables→DisallowTo→Dial list no.→Enter→ Dial ext. no.→ Enter→Exit→Exit
PC Procedure	F8→F4→Type list no.→F10→Type ext. no.→F10→ F5→F5

Procedure: Assign Disallowed Lists to Extensions

Console Display/Instructions	Additional Information	PC
▶ **1. Select the Tables menu.**		
System Programming: > Make a selection System Extensions SysRenumber Options Operator Tables LinesTrunks AuxEquip Exit NightSrvce		F8
▶ **2. Select Disallow To Lists.**		
Tables: Make a selection AllowList ARS AllowTo UDP Routing Disallow DisallowTo Exit		F4
▶ **3. Enter the list number (*n* = 0 to 7).**		
Disallow To List: Enter list number (0-7) Backspace Exit Enter	Dial or type [*n*].	
▶ **4. Save your entry.**		
Select Enter.		F10

Console/Display Instructions **Additional Information** **PC**

▶ 5. Specify the extension to which you want to assign the disallowed list.

```
Disallow To List x:
Enter extensions to list

                 Delete
Backspace        Next
Exit             Enter
```

x = list number entered in Step 3

If no DSS is attached:
SP: "Entering an Extension"

If DSS is attached:
Toggle the red LED on or off as required. Go to Step 7.
On = disallowed list is assigned
Off = disallowed list is not assigned

▶ 6. Assign or remove the disallowed list from the extension.

Select Enter or F10
Delete. F8

You may continue to assign or remove the disallowed list from additional extensions by repeating Steps 5 and 6.

▶ 7. Continue to assign extensions to the next disallowed list or go to Step 8.

Select Next. F9

Return to Step 5. The next disallowed list is displayed on Line 1.

▶ 8. Return to the System Programming menu.

Select Exit twice. F5 F5

Remote Access Features

This section covers the following Remote Access features:

- Remote Access over Networked Tandem and Tie Trunks (Release 6.0 and later systems only)
- Remote Access Trunk Assignment
- Remote Access Automatic Callback
- Remote Access without Barrier Codes
- Remote Access Barrier Codes
- Remote Access with Barrier Codes

SECURITY ALERT:
As a customer of a new communications system, you should be aware that there exists an increasing problem of telephone toll fraud. Telephone toll fraud can occur in many forms, despite the numerous efforts of telephone companies and telephone equipment manufacturers to control it. Some individuals use electronic devices to prevent or falsify records of these calls. Others charge calls to someone else's number by illegally using lost or stolen calling cards, billing innocent parties, clipping on to someone else's line, and breaking into someone else's telephone equipment physically or electronically. In certain instances, unauthorized individuals make connections to the public switched network through the use of remote access features.

The Remote Access feature of your system, if you choose to use it, permits off-premises callers to access the system from a remote telephone by using an 800 number or a 7- or 10-digit telephone number. The system returns an acknowledgment signaling the user to key in his or her barrier code, which is selected and programmed by the system manager. After the barrier code is accepted, the system returns dial tone to the user. If you do not program specific restrictions, the user will be able to place any call normally dialed from a telephone associated with the system. Such an off-premises network call is originated at and will be billed from the system location.

The Remote Access feature helps the customer, through proper administration, to minimize the ability of unauthorized persons to gain access to the network. Most commonly, phone numbers and codes are compromised when overheard in a public location, through theft of a wallet or purse containing access information, or through carelessness (writing codes on a piece of paper and improperly discarding it). Additionally, hackers may use a computer to dial an access code and then publish the information to other hackers. Enormous charges can be run up quickly. It is the customer's responsibility to take the appropriate steps to properly implement the features, evaluate and program the various restriction levels, protect access codes, and distribute access codes only to individuals who have been fully advised of the sensitive nature of the access information.

Common carriers are required by law to collect their tariffed charges. While these charges are fraudulent charges made by persons with criminal intent, applicable tariffs state that the customer of record is responsible for payment of all long-distance or other network charges. Lucent Technologies cannot be responsible for such charges and will not make any allowance or give any credit for charges that result from unauthorized access.

To minimize the risk of unauthorized access to your communications system follow these basic rules:

- *Use a nonpublished remote access number.*
- *Assign barrier codes randomly to users on a need-to-have basis, keeping a log of ALL authorized users and assigning one code to one person.*
- *Use random sequence barrier codes, which are less likely to be broken.*
- *Deactivate all unassigned codes promptly.*
- *Ensure that remote access users are aware of their responsibility to keep the telephone number and any barrier codes secure.*
- *When possible, restrict the off-network capability of off-premises callers using the Calling Restrictions and Disallowed List capabilities.*
- *When possible, block out-of-hours calling.*
- *Frequently monitor system call detail reports for quicker detection of any unauthorized or abnormal calling patterns.*
- *Limit remote call forward to persons on a need-to-have basis.*
- *Always use the longest length password allowed on the system.*
- *Passwords should consist of a random, non-repetitive, hard-to-guess sequence of digits.*

Remote Access over Networked Tandem PRI and Tie Trunks

In Release 6.0 and later systems, Hybrid/PBX mode only, an ARS call originating at a remote, private networked communications system can arrive on a networked tandem tie or PRI trunk of the local system and receive remote-access treatment automatically. This operation allows callers on one system to use lines on another system speedily and transparently when optimal cost efficiency dictates the need for lines connected to a different switch in the organization's private network (in prior systems and for calls over other remote access trunks, it is necessary to make an explicit remote-access call, enter a barrier code, and finally use ARS).

To permit this operation, both the local and remote systems must be programmed using ARS and remote access options. If two or more different system managers program the private networked systems, they should work together to coordinate their efforts.

Local Users Calling out on Private Networked Lines

To implement this operation on a local system where callers will use the networked lines on a *remote* system, use the procedures outlined in the section, "Automatic Route Selection" on page 3–528.

Remote Users Calling out on Local Lines

When your system is in a private network with a remote system, you can set up your system so that remote users can use public switched network trunks connected to your control unit for cost-efficient calling. Your system treats such calls as remote access calls, but the networked user does not enter a barrier code. Instead, the system applies default restrictions that apply to all tie and/or all non-tie trunks, as described later in this topic. These restrictions do not affect other remote-access trunks that are programmed for use with barrier codes

Calling restrictions should be imposed at the remote originating switch using ARS and extension FRLs as necessary. In addition, it is unnecessary to assign tandem trunks for remote access. It is easiest if private networked systems that share outside facilities also use the same ARS access code (9, for example).

To implement this operation on a local system where callers on a remote networked system will use the *local* trunks connected to your MERLIN LEGEND Communications System control unit, use the procedures in this chapter as outlined below. The relevant topics provide additional details.

1. It is not necessary to assign private networked trunks for remote access. Callback for non-local trunk-to-trunk tandem calls does not work. Automatic Callback can be used at the local system when all private networked trunks are busy.

2. Specify that all tie trunks (that is, networked tandem tie trunks) and/or all non-tie trunks (that is, all PRI tandem trunks) will not require barrier codes. This does not affect calls dialing the remote access code if the trunks on the remote system are regular, assigned remote-access trunks accessed by remote access users on your own system. See “Remote Access without Barrier Codes” on page 510.
3. Change the factory set class of restrictions, as necessary, on tie or non-tie trunks. Any necessary restrictions should be imposed by the system manager for a call at the originating switch. For example, extensions may be assigned a Disallowed List to prevent 900 and 976 calls. If certain private trunks are reserved for particular purposes, the remote system manager may use UDP routing FRLs for this purpose.
4. Make any necessary changes to ARS in order to route remote users’ calls to yet another system if more cost effective, or to add or absorb digits (an area code, for example) before sending a call over a trunk that is connected to your system. See “Automatic Route Selection” on page 3–528 for the procedures.

Remote Access Trunk Assignment

Use this procedure to assign or remove the trunks used for remote access. You can also use this procedure to specify whether the Remote Access feature is dedicated (always used for remote access) or shared (used for remote access only when Night Service is activated).

Trunks used for dedicated remote access must not be assigned to ring into a calling group or the QCC queue (Hybrid/PBX mode only).

In Release 6.0 and later systems, a remote-access caller who calls into his or her own local system can reach extensions private networked to the local system (non-local dial plan extensions) just as on-site users of the local system can.

In Hybrid/PBX mode, if a trunk assigned to ring into the QCC queue is also used for shared remote access, perform the procedure below before you attempt the procedure “QCC Operator to Receive Calls” on page 3–77.

NOTE:
A loop-start line must be programmed for Reliable Disconnect if it is to be used for remote access (see “Disconnect Signaling Reliability” on page 3–61).

Summary: Remote Access Trunk Assignment

Programmable by	System Manager
Mode	All
Idle Condition	Not required
Planning Form	Form 3a, Incoming Trunks: Remote Access
Factory Setting	Remote Access is not assigned
Valid Entries	Dedicated, Shared, No Remote
Inspect	Yes
Copy Option	No
Console Procedure	LinesTrunks→RemoteAccss→LinesTrunks→ Dial line/trunk no.→Enter→Specify how trunk is used→ Enter→ Exit→Exit
PC Procedure	F4 →F8 →F1 →Type line/trunk no.→F10 → Specify how trunk is used→F10 →F5 →F5

Procedure: Remote Access Trunk Assignment

Console/Display Instructions	Additional Information	PC

▶ 1. Select the Lines and Trunks menu.

```
System Programming:        >
Make a selection
System          Extensions
SysRenumber     Options
Operator        Tables
LinesTrunks     AuxEquip
Exit            NightSrvce
```

F4

▶ 2. Select Remote Access.

```
Lines and Trunks:          >
Make a selection
LS/GS/DSL       PRI
TIE Lines       Copy
TT/LS Disc      RemoteAccss
DID             Pools
Exit            Toll Type
```

F8

Console/Display Instructions	Additional Information	PC

▶ 3. Select Lines and Trunks.

```
Remote Access (DISA):
Make a selection
LinesTrunks      AutoQueuing
Non-TIE
TIE Lines
BarrierCode
Exit
```

F1

▶ 4. Enter the line/trunk for remote access usage (*nnnn*).

```
Remote Access Usage:
Enter line/trunk port



Backspace
Exit            Enter
```

Dial or type:
Trunk number [*nnn*]
Logical ID number #*[nnnn]*

▶ 5. Save your entry.

Select Enter. F10

▶ 6. Specify how the line/trunk is used with remote access.

```
Line/Trunk xxxx:
Select one
Dedicated
Shared
No Remote
                Next
Exit            Enter
```

xxxx = line/trunk entered in Step 4

Select Dedicated, F1
Shared, or F2
No Remote. F3

▶ 7. Continue to assign the remote access status to another line/trunk or go to Step 8.

Select Next. F9

Return to Step 6. The next line/trunk is be displayed on Line 1.

Console/Display Instructions	Additional Information	PC
▶ **8. Save your entry.**		
Select Enter.		F10
▶ **9. Return to the System Programming menu.**		
Select Exit twice.		F5 F5

Remote Access Automatic Callback

Use this procedure either to allow remote access users to use the Automatic Callback feature to request busy lines/trunks or pools or to prevent use of the Automatic Callback feature.

NOTE:
This feature applies to Hybrid/PBX mode only.

Summary: Remote Access Automatic Callback

Programmable by	System Manager
Mode	Hybrid/PBX
Idle Condition	Not required
Planning Form	Form 3a, Incoming Trunks: Remote Access
Factory Setting	Disable
Valid Entries	Disable, Enable
Inspect	No
Copy Option	No
Console Procedure	LinesTrunks→RemoteAccss→AutoQueuing→ Enable or Disable→Enter→Exit→Exit
PC Procedure	F4 → F8 → F6 → F1 or F2 → F10 → F5 → F5

Procedure: Remote Access Automatic Callback

Console/Display Instructions	Additional Information	PC

1. Select the Lines and Trunks menu.

```
System Programming:      >
Make a selection
System          Extensions
SysRenumber     Options
Operator        Tables
LinesTrunks     AuxEquip
Exit            NightSrvce
```

F4

2. Select Remote Access.

```
Lines and Trunks:        >
Make a selection
LS/GS/DSL       PRI
TIE Lines       Copy
TT/LS Disc      RemoteAccss
DID             Pools
Exit            Toll Type
```

F8

3. Specify Automatic Callback (queuing).

```
Remote Access (DISA):
Make a selection
LinesTrunks     AutoQueuing
Non-TIE
TIE Lines
BarrierCode
Exit
```

F6

4. Allow or disallow use of the Automatic Callback feature by remote access users.

```
Remote Access Auto Que:
Select one
Enable
Disable

Exit            Enter
```

Select Enable or Disable.

F1
F2

Console Display/Instructions	Additional Information	PC
▶ **5. Save your entry.**		
Select Enter.		F10
▶ **6. Return to the System Programming menu.**		
Select Exit twice.		F5 F5

Remote Access without Barrier Codes

Use this procedure to change the class of restriction for one of the following:

- All non-tie lines/trunks
- All tie trunks and DID trunks with Remote Access
- DID remote access code

SECURITY ALERT:
Your system will be highly susceptible to toll fraud if you activate the Remote Access feature without barrier codes. Lucent Technologies does not recommend doing this except in cases where your remote-access trunks are being used by external users connected to a system that is in a private network with your own (Release 6.0 and later). Even in these cases, the lack of barrier code poses a risk of toll fraud. Be sure that the remote system manager assigns any necessary restrictions.

NOTE:
If barrier code requirements have been established for remote access users, use "Remote Access with Barrier Codes" on page 3–522 and not this procedure.

The class of restriction assigned may be one of the following:

- **Restriction.** Determines whether remote access users can make local and/or toll calls and includes the following settings:
  - Unrestricted
  - Toll restricted
  - Outward restricted
- **ARS Facility Restriction Level** (Hybrid/PBX only). Allows or disallows use of outgoing trunks by assigning a facility restriction level from 0 through 6. The FRL ranges from 0 (most restrictive) to 6 (least restrictive). The FRL value assigned here is the opposite of the FRL value assigned to the ARS route, where a value of 0 is the least restrictive and a value of 6 is the most restrictive.

- **Allowed Lists Assignment.** Assigns Allowed Lists and is used when remote access users are restricted from making local or toll calls.
- **Disallowed Lists Assignment.** Assigns Disallowed Lists and is used when remote access users are not restricted from making local or toll calls.

A maximum of eight Allowed or Disallowed Lists can be assigned to lines/trunks.

Class of restriction settings are assigned either to all non-tie trunks or to all tie trunks and DID trunks. They cannot be assigned to each trunk on an individual basis.

Summary: Remote Access without Barrier Codes

Programmable by	System Manager
Mode	All
Idle Condition	Not required
Planning Form	Form 3a, Incoming Trunks: Remote Access
Factory Setting	Call restriction: Outward restricted ARS restriction level: 3
Valid Entries	Unrestricted, Toll Restricted, Outward Restricted; 0 to 6
Inspect	No
Copy Option	No

Console Procedure	To change calling restrictions:
	`LinesTrunks`→`RemoteAccss`→`Non-TIE` or `TIE Lines`→ `Restriction`→Select restriction→`Enter`→ `Exit`→ `Exit`→`Exit`→`Exit`
	
	To change ARS Facility Restriction Level:
	`LinesTrunks`→`RemoteAccss`→`Non-TIE` or `TIE Lines`→ `ARS Restrict`→**Drop**→Dial FRL value→`Enter`→ `Exit`→ `Exit`→`Exit`→`Exit`
	
	To assign/remove Allowed Lists:
	`LinesTrunks`→`RemoteAccss`→`Non-TIE` or `TIE Lines`→ `Allow List`→Dial list no.→`Enter`→`Exit`→`Exit`→ `Exit`→`Exit`
	
	To assign/remove Disallowed Lists:
	`LinesTrunks`→`RemoteAccss`→`Non-TIE` or `TIE Lines`→ `DisallowLst`→Dial list no.→`Enter`→`Exit`→`Exit`→ `Exit`→`Exit`

PC Procedure	To change calling restrictions: [F4]→[F8]→[F2] or [F3]→[F2]→Select restriction→[F10]→ [F5]→[F5]→[F5]→[F5]

To change ARS Facility Restriction Level:
F4 → F8 → F2 or F3 → F3 → Alt + P →
Type FRL value → F10 → F5 → F5 → F5 → F5

To assign/remove Allowed Lists:
F4 → F8 → F2 or F3 → F4 → Type list no. → F5 →
F5 → F5 → F5

To assign/remove Disallowed Lists:
F4 → F8 → F2 or F3 → F6 → Type list no. → F10 →
F5 → F5 → F5 → F5

Procedure: Remote Access without Barrier Codes

Console/Display Instructions	Additional Information	PC
1. Select the Lines and Trunks menu.		
System Programming: > Make a selection System Extensions SysRenumber Options Operator Tables LinesTrunks AuxEquip Exit NightSrvce		F4
2. Select Remote Access.		
Lines and Trunks: > Make a selection LS/GS/DSL PRI TIE Lines Copy TT/LS Disc RemoteAccss DID Pools Exit Toll Type		F8

Console Display/Instructions	Additional Information	PC
▶ **3. Specify whether you are establishing/removing a class of restrictions for non-tie lines/trunks or for tie and DID trunks.**		
Remote Access (DISA): Make a selection LinesTrunks AutoQueuing Non-TIE TIE Lines BarrierCode Exit	Select Non-TIE or TIE Lines.	F2 F3
▶ **4. Select an option.**	● ◆ ■	
**** Remote Access: Make a selection BarrierCode DisallowLst Restriction ARS Restrct Allow List Exit	**** = option name selected in Step 3 To change current calling restrictions, select Restriction and go to ● Restriction Procedure. To change ARS Facility Restriction level, select ARS Restrct and go to ◆ ARS Restriction Procedure. To change Allowed Lists, select Allow List. To change Disallowed Lists select Disallow Lstand go to ■ Allowed or Disallowed Lists Procedure.	F2 F3 F4 F6

● Restriction Procedure

Console/Display Instructions	Additional Information	PC

▶ 1. Specify the restriction type.

```
**** Remote Access:
Select one
Unrestricted
Outward restrict
Toll Restrict

Exit            Enter
```

Select Unrestricted, F1
Outward Restrict, or F2
Toll Restrict. F3

▶ 2. Save your entry.

Select Enter. F10

▶ 3. Return to the System Programming menu.

Select Exit three times. F5 F5 F5

◆ ARS Restriction Procedure

Console/Display Instructions	Additional Information	PC

▶ 1. Erase the current ARS facility restriction level (*n*).

```
****      Remote Access:
Enter ARS restriction
level (0-6)
n

Backspace
Exit            Enter
```

**** = option name selected in Step 3

Press **Drop.** Alt+P

▶ 2. Enter a new ARS facility restriction level (*n* = 0 to 6).

Dial or type [*n*].

▶ 3. Save your entry.

Select Enter. F10

▶ 4. Return to the System Programming menu.

Select Exit three times. F5 F5 F5

■ Allowed or Disallowed Lists Procedure

Console/Display Instructions	Additional Information	PC
▶ **1. Enter the list you want to assign (*n* = 0 to 7).**		

`*** Remote Access:`
`Enter **** List`
`access (0-7)`
 	
`Delete`
`Backspace`
`Exit Enter`
	∗∗∗ = option name selected in Step 3
	∗∗∗∗ = option name selected in Step 5
	
	Dial or type [*n*].	

▶ **2. Assign or remove the list.**		
Select `Enter` or `Delete`.		F10 F8
▶ **3. Return to the System Programming menu.**		
Select `Exit` three times.		F5 F5 F5

Remote Access Barrier Codes

Use this procedure to establish or remove barrier code requirements as well as to establish or remove the barrier codes themselves.

Barrier codes are security passwords that restrict users from making unauthorized remote access calls on tie and non-tie lines and trunks. Callers are allowed three attempts per call to enter the correct remote access barrier code. If the caller enters an incorrect barrier code or times out during code entry, the caller hears the retry tone. The caller can erase an entered code by dialing ** *(two asterisks).* Code erasure is counted as one of the three permitted attempts. After three unsuccessful attempts, the caller hears a reorder tone and the call is disconnected. If this happens, the SMDR contains sixteen 0s in the Account Code field to flag the three failed attempts.

A maximum of 16 barrier codes are allowed for all lines/trunks. Each of the 16 barrier codes may be programmed with its own class of restriction (COR).

The systemwide barrier code length can range from a minimum of 4 characters to a maximum of 11 characters. The factory setting length is 7. If you enter a length that is less than 4 or greater than 11, the entry is erased and the previous entry displays on the screen. When the barrier code length is changed, all barrier codes are erased and must be reassigned. If the barrier code length is changed and barrier codes are not reassigned, users can dial into remote access trunks and enter a barrier code, but are denied access into the remote access trunks no matter what code is entered.

SECURITY ALERT:
Always use the longest length barrier code allowed on the system.

Barrier codes should consist of a random, non-repetitive, hard-to-guess sequence of digits.

The time and date of the most recent change made to the systemwide barrier code length is shown during the system programming procedure as well as on the Remote Access DISA Information report. The SMDR record for incoming remote access trunks includes the barrier code IDs established in this procedure.

Use numbers 0 through 9 and the asterisk (∗) to enter the barrier codes. The codes cannot start with an asterisk and cannot contain two consecutive asterisks. (The use of two consecutive asterisks is reserved for users to erase an incorrect barrier code entry.)

See "Remote Access without Barrier Codes" on page 3–510 to allow or deny use of system features for each barrier code assigned.

Summary: Remote Access Barrier Codes

Programmable by	System Manager
Mode	All
Idle Condition	Not required
Planning Form	Form 3a, Incoming Trunks: Remote Access
Factory Setting	No barrier codes are established
Valid Entries	Not applicable
Inspect	No
Copy Option	No

Console Procedure

To establish or remove code requirements:
LinesTrunks→RemoteAccss→Non-Tie or TIE Lines→ BarrierCode→Specify whether barrier codes are required→Enter→Exit→Exit→Exit

To change barrier code length:
LinesTrunks→RemoteAccss→BarrierCode→ Code Info→ Code Length→**Drop**→Dial code length→ Enter→Yes→Exit→Exit→Exit

To change barrier code:
LinesTrunks→RemoteAccss→BarrierCode→ Code Info→ Code Entry→Dial code ID→Enter→ **Drop**→Dial code→Enter→Exit→Exit→Exit

PC Procedure

To establish or remove code requirements:
[F4]→[F8]→[F2] or [F3]→[F1]→Specify whether barrier codes are required→[F10]→[F5]→[F5]→[F5]

To change barrier code length:
[F4]→[F8]→[F4]→[F2]→[F1]→[Alt] + [P]→ Type code length→[F10]→[F2]→[F5]→[F5]→[F5]

To change barrier code:
[F4]→[F8]→[F4]→[F2]→[F2]→Type Code ID→[F10]→ [Alt] + [P]→Dial code length→[F10]→[F5]→[F5]→[F5]

Procedure: Remote Access Barrier Codes

Console/Display Instructions	Additional Information	PC
▶ **1. Select the Lines and Trunks menu.**		
System Programming: >		
Make a selection		
System Extensions		
SysRenumber Options		
Operator Tables		
LinesTrunks AuxEquip		
Exit NightSrvce		[F4]

Console/Display Instructions	Additional Information	PC

▶ 2. Select Remote Access.

```
Lines and Trunks:        >
Make a selection
LS/GS/DSL       PRI
TIE Lines       Copy
TT/LS Disc      RemoteAccss
DID             Pools
Exit            Toll Type
```

F8

▶ 3. Select an option.

●

```
Remote Access (DISA):
Make a selection
LinesTrunks     AutoQueuing
Non-TIE
TIE Lines
BarrierCode
Exit
```

Select Non-TIE or TIE Lines to specify whether barrier codes apply to non-tie or tie trunks and go to ● Establish or Remove Barrier Code Requirements Procedure. F2 F3

Select BarrierCode to change the barrier code length or edit a barrier code, and continue with Step 4. F4

▶ 4. Select Code Information.

```
RemoteAccss BarrierCode:
Make a selection
SProg/Maint     Allow List
Code Info       DisallowLst
Restriction
ARS Restrct
Exit
```

F2

▶ 5. Select an option.

◆ ■

```
BarrierCode Info:
Make a selection
Code Length
Code Entry

Exit
```

To change the length of the barrier code, select Code Length and go to ◆ Change Barrier Code Length Procedure. F1

To edit a specific barrier code, select Code Entry and go to ■ Change Barrier Code Procedure. F2

● Establish or Remove Barrier Code Requirements Procedure

Console/Display Instructions	Additional Information	PC
▶ 1. Select Barrier Code.		
**** Remote Access: Make a selection BarrierCode DisallowLst Restriction ARS Restrct Allow List Exit	**** = option name selected in Step 3	F1
▶ 2. Specify barrier code requirement.		
**** Remote Access: Select one Barrier Code Required Barrier Code Not Required Exit Enter	**** = option name selected in Step 3 Select Barrier Code Required or Barrier Code Not Required.	 F1 F2
▶ 3. Save your entry.		
Select Enter.		F10
▶ 4. Return to the System Programming menu.		
Select Exit three times.		F5 F5 F5

◆Change Barrier Code Length Procedure

When the systemwide barrier code length is changed, all barrier codes are erased and must be reassigned. Users are denied access to remote access trunks until new barrier codes are assigned.

Console/Display Instructions	Additional Information	PC
▶ **1. Erase the current code length (*nn*).**		
Barrier Code Length: Changed: *mm/dd/yy hh:mmAM* Enter code length (4-11) nn Backspace Exit Enter	The screen displays the date and time of the most recent change to the barrier code length.	
	Press **Drop**.	Alt + P
▶ **2. Enter the new length of the code (*nn* = 4 to 11).**		
Dial or type [*nn*].		⮌
▶ **3. Save your entry.**		
Select Enter.		F10
▶ **4. Respond to the confirmation prompt.**		
Barrier Code Length: All Barrier Codes will be erased. Do you want to continue? Yes No	If you select No, return to Step 5 of the main procedure.	F1
	Select Yes to continue.	F2
▶ **5. Save your entry.**		
Select Enter.		F10
▶ **6. Return to the System Programming menu.**		
Select Exit three times.		F5 F5 F5

◆ Change Barrier Code Procedure

Console/Display Instructions	Additional Information	PC

▶ 1. Enter the barrier code ID number (*nn* = 1 to 16).

```
RemoteAccss BarrierCode:
Enter Barriercode number
(1-16)



Backspace
Exit            Enter
```

Dial or type [*nn*].

▶ 2. Save your entry.

Select Enter. F10

▶ 3. Erase the current code (*nnnn*).

```
BarrierCode xx :
Enter yy digits (0-9, *)
code
nnnn


Backspace       Next
Exit            Enter
```

xx = barrier code ID number entered in Step 1
yy = barrier code length

Press **Drop**. Alt+P

▶ 4. Enter a code of up to 11 digits [*N* = any combination of 0 to 9 and an asterisk (*)].

Dial or type [*N*].

▶ 5. Continue to assign the code to another barrier code ID number or go to Step 6.

Select Next. F9

Return to Step 3. The next barrier code number is displayed on Line 1.

▶ 6. Save your entry.

Select Enter. F10

▶ 7. Return to the System Programming menu.

Select Exit three times. F5 F5 F5

Remote Access with Barrier Codes

Use this procedure to change the class of restriction for individual remote access barrier codes. The class of restriction assigned to each barrier code allows or denies the use of the following system features:

- **Restriction.** Determines whether remote access users can make local and/or toll calls, and includes the following settings:
  - Unrestricted
  - Toll restricted
  - Outward restricted
- **ARS Facility Restriction Level** (Hybrid/PBX only). Allows or restricts use of outgoing trunks by assigning a facility restriction level (FRL) from 0 through 6. The FRL ranges from 0 (most restrictive) to 6 (least restrictive). The FRL value assigned here is the opposite of the FRL value assigned to the ARS route, where a value of 0 is the least restrictive, and a value of 6 is the most restrictive.
- **Allowed Lists Assignment.** Assigns Allowed Lists and is used when remote access users are restricted from making local or toll calls.
- **Disallowed Lists Assignment.** Assigns Disallowed Lists and is used when remote access users are not restricted from making local or toll calls.

A maximum of eight Allowed or Disallowed Lists can be assigned to each barrier code. Class of restriction settings apply to individual barrier codes.

NOTE:
If barrier code requirements have not been established or have been removed for remote access users, do not use this procedure. See “Remote Access without Barrier Codes” on page 510.

Summary: Remote Access with Barrier Codes

Programmable by	System Manager
Mode	All
Idle Condition	Not required
Planning Form	Form 3a, Incoming Trunks: Remote Access
Factory Setting	Calling restrictions: Barrier Code: outward restricted All other barrier codes: unrestricted ARS restriction level: 3
Valid Entries	Unrestricted, Toll Restricted, Outward Restricted; 0 to 6
Inspect	No
Copy Option	No

Console Procedure LinesTrunks→RemoteAccss→BarrierCode→ Restriction→Dial barrier code no.→Enter→Select restriction→Enter→ARS Restrict→Dial barrier code no.→Enter→**Drop**→Dial FRL value→Enter→ Allow List or Disallow List→Dial barrier code no.→ Enter→Dial list no.→Enter→Exit→Exit→Exit→Exit

PC Procedure [F4]→[F8]→[F4]→[F3]→Type barrier code no.→[F10]→ Select restriction→[F10]→[F4]→Type barrier code no.→ [F10]→[Alt] + [P]→Type FRL value→[F10]→[F6] or [F7]→ Dial barrier code no.→[F10]→[F5]→[F5]→[F5]→[F5]

Procedure: Remote Access with Barrier Codes

Console/Display Instructions	Additional Information	PC
▶ 1. Select the Lines and Trunks menu.		
System Programming: >		
Make a selection		
System Extensions		
SysRenumber Options		
Operator Tables		
LinesTrunks AuxEquip		
Exit NightSrvce		F4
▶ 2. Select Remote Access.		
Lines and Trunks: >		
Make a selection		
LS/GS/DSL PRI		
TIE Lines Copy		
TT/LS Disc RemoteAccss		
DID Pools		
Exit Toll Type		F8

Console/Display Instructions	Additional Information	PC

▶ 3. Select Barrier Code Access.

```
Remote Access (DISA):
Make a selection
LinesTrunks      AutoQueuing
Non-TIE
TIE Lines
BarrierCode
Exit
```

F4

▶ 4. Select an option. ● ◆ ■

```
RemoteAccss BarrierCode:
Make a selection
SProg/Maint      Allow List
Codes            DisallowLst
Restriction
ARS Restrct
Exit
```

To change current calling restrictions, select `Restriction` and go to ● Change Current Call Restrictions Procedure. F3

To change ARS Facility Restriction level, select `ARS Restrict` and go to ◆ Change ARS Restriction Procedure. F4 F6

To change Allowed/Disallowed lists, select `Allow List` or `Disallow Lst` and go to ■ Change Allowed/Disallowed Lists Procedure. F7

● Change Current Calling Restrictions Procedure

Console/Display Instructions	Additional Information	PC

▶ 1. Enter the barrier code number (*nn* = 1 to 16).

```
Barrier Code:
Enter Barriercode number
(1-16)



Backspace
Exit             Enter
```

Dial or type [*nn*].

▶ 2. Save your entry.

Select `Enter`. F10

Console/Display Instructions **Additional Information** **PC**

▶ **3. Specify a restriction.**

```
Barrier Code xx:
Select one
Unrestricted
Outward Restrict
Toll Restrict
                Next
Exit            Enter
```

xx = barrier code number entered in Step 1

Select Unrestricted, F1
Outward Restrict, or F2
Toll Restrict. F3

▶ **4. Continue to assign the restriction to another barrier code number or go to Step 5.**

Select Next. F9

Return to Step 3. The next barrier code number is displayed on Line 1.

▶ **5. Save your entry.**

Select Enter. F10

▶ **6. Return to the System Programming menu.**

Select Exit three times. F5 F5 F5

◆ **Change ARS Restriction Procedure**

Console/Display Instructions **Additional Information** **PC**

▶ **1. Enter a barrier code number (*nn* = 1 to 16).**

```
Barrier Code:
Enter Barriercode number
(1-16)



Backspace
Exit            Enter
```

Dial or type [*nn*].

▶ **2. Save your entry.**

Select Enter. F10

Console/Display Instructions	Additional Information	PC

▶ 3. Erase the current ARS FRL (*n*).

```
Barrier Code xx:
Enter ARS Restriction
level (0-6)
n

Backspace        Next
Exit             Enter
```

xx = barrier code entered in Step 1

Press **Drop**. Alt+P

▶ 4. Enter a new ARS FRL (*n* = 0 to 6).

Dial or type [*n*].

▶ 5. Continue to assign the level to another barrier code number or go to Step 6.

Select Next. F9

Return to Step 3. The next barrier code number is displayed on Line 1.

▶ 6. Save your entry.

Select Enter. F10

▶ 7. Return to the System Programming menu.

Select Exit three times. F5 F5 F5

■ Change Allowed/Disallowed Lists Procedure

Console/Display Instructions	Additional Information	PC

▶ 1. Enter a barrier code number (*nn* = 1 to 16).

```
Barrier Code:
Enter Barriercode number
(1-16)

Backspace
Exit             Enter
```

Dial or type [*nn*].

Console/Display Instructions	Additional Information	PC
▶ **2. Save your entry.**		
Select Enter.		F10
▶ **3. Enter the number of the Allowed List or Disallowed List you want to assign or remove (*n* = 0 to 7).**		
Barrier Code *xx*: Enter AllowedList access (0-7) Delete Backspace Next Exit Enter	*xx* = barrier code entered in Step 1	
	Dial or type [*n*].	
▶ **4. Assign or remove the Allowed List or Disallowed List from the barrier code number.**		
Select Enter or		F10
Delete.		F8
	You may continue to assign or remove additional lists from the barrier code number by repeating Steps 3 and 4.	
▶ **5. Continue to assign or remove lists from the next barrier code number or go to Step 6.**		
Select Next.		F9
	Return to Step 3. The next barrier code number is displayed on Line 1.	
▶ **6. Save your entry.**		
Select Enter.		F10
▶ **7. Return to the System Programming menu.**		
Select Exit three times.		F5 F5

Automatic Route Selection

This section contains programming procedures for the following Automatic Route Selection (ARS) features:

- 1 + 7-Digit Dialing Requirements
- ARS Tables
- Start and Stop Times for Subpatterns
- Pool Routing
- Facility Restriction Level (FRL)
- Digit Absorption
- Other Digits
- N11 Special Numbers Tables
- Dial 0 Table
- Voice and/or Data Routing

NOTE:
ARS applies to Hybrid/PBX mode only.

ARS over Private Networked Tandem PRI and Tie Trunks

In Release 6.0 and later systems, Hybrid/PBX mode only, callers on one system can use lines on another system quickly and transparently for optimal cost by routing calls to a different switch in the organization's private network (in prior systems, it is necessary to make an explicit remote-access call, enter a barrier code, and finally use ARS). To permit this operation, both the local and remote systems must be programmed using ARS and remote access options.

Remote Users Calling out on Local Private Networked Lines

To implement this operation on a local system where remote callers will use the private networked lines connected to your system, use the procedures outlined in the section "Remote Access Features" on page 3–502.

Local Users Calling out on Private Networked Lines

To implement this operation on a local system where callers will use the trunks on a *remote* system, use the procedures outlined in this section. The relevant topics provide additional details.

1. Assign the private networked tandem tie and/or PRI tandem trunks to a pool or pools including only those types of trunks. See “Trunks to Pools Assignment” on page 91.
2. Use one or more ARS tables for routing calls. Typically, you might need an area code table. For example, if the remote system is in the 617 area code and your local system is in the 908 area code, the area code table that you set up should include the entry 617. The type of table required depends upon how users in your system will employ private networked lines. At the remote system, ARS can be used, if necessary, to route the call to yet another networked system. See “ARS Tables” on page 532.
3. Set up the subpatterns for the table. In doing so, you may wish to check with the remote system manager to ensure that routing will stipulate the most cost-effective timing based on the rates at the remote location. If the remote system is in a different time zone from your own, you may need to take this into consideration as well. See “Start and Stop Times for Subpatterns” on page 535.
4. Assign each tandem and/or tie trunk pool to an ARS table. See “Pool Routing” on page 539.
5. Assign appropriate Facility Restriction Levels to the routes and to the extensions that will use the private network lines. Factory settings restrict toll calls. See “Facility Restriction Level” on page 3–543 and “ARS Restriction Level for Extensions” on page 3–327 respectively.
6. Assign absorbed and other (added) digits as required by the final destination. The local ARS feature adds (prepends) the ARS access code of the remote system. At the remote system digit absorption may be needed. For example, if local callers are in the 908 area code but the private network lines are connected to a system in the 617 area code, callers might dial 9617555 1212, where 9 is the local ARS access code. At the remote system, because the call would be a local call, the absorbed digits would be 1617. See the ARS topics, “Digit Absorption” on page 3–547 and “Other Digits” on page 3–551 for additional information.

SECURITY ALERT:
In Release 6.0 and later systems, do not place remote ARS access codes in the non-local dial plan by specifying, for example, a non-local extension range as 9000–9050 when the remote ARS access code is 9. Doing so allows DID callers to make outside calls through the remote switch and may allow transferring of outside callers to outside dial tone on a remote switch, possibly resulting in toll fraud.

1 + 7-Digit Dialing Requirements

Use this procedure for calls placed within the same (home) area code as the system. The procedure allows you to specify whether or not the local telephone company requires a 1 to precede the 7-digit number. The two available settings are:

- **Within Area Code.** Requires that a 1 plus a 7-digit number must be dialed; the system checks the 1 + 7-digit tables for routing.
- **Not Within Area Code.** Does not require that a 1 precede the 7-digit number (the system does this automatically).

Summary: 1 + 7-Digit Dialing Requirements

Programmable by	System Manager
Mode	Hybrid/PBX
Idle Condition	Not required
Planning Form	Form 3f, Automatic Route Selection Tables
Factory Setting	Not within area code
Valid Entries	Not within area code, Within area code
Inspect	No
Copy Option	No
Console Procedure	Tables→ARS→ARS 1+7Dial→Within Area Code or Not within Area Code→Enter→Exit→Exit
PC Procedure	F8 → F6 → F1 → F1 or F2 → F10 → F5 → F5

Procedure: 1 + 7-Digit Dialing Requirements

Console/Display Instructions	Additional Information	PC
▶ **1. Select the Tables menu.**		
System Programming: > Make a selection System Extensions SysRenumber Options Operator Tables LinesTrunks AuxEquip Exit NightSrvce		F8

Console/Display Instructions **Additional Information** **PC**

▶ **2. Select Automatic Route Selection.**

```
Tables:
Make a selection
AllowList        ARS
AllowTo          UDP Routing
Disallow
DisallowTo
Exit
```

F6

▶ **3. Select ARS 1+7 Digit Dial.**

```
ARS:                        >
Make a selection
ARS 1+7Dial      SubA Absorb
ARS Input        Sub A Digit
Sub A Pools      Sub B Start
Sub A FRL        Sub B Stop
Exit             Sub B Pool
```

F1

▶ **4. Specify whether 1+7-digit dialing is required within the home area code.**

```
1+7 Digit Dialing:
Select one
Within Area Code
Not within Area Code

Exit             Enter
```

Select Within Area Code or F1
Not within Area Code. F2

▶ **5. Save your entry.**

Select Enter. F10

▶ **6. Return to the System Programming menu.**

Select Exit twice. F5 F5

ARS Tables

Use this procedure for the following tasks:

- To specify type of table (6-digit, area code, exchange, or 1 + 7-digit number)
- To add or change area codes to be included in each table
- To add or change exchanges to be included in each table

A maximum of 16 tables can be established, numbered 1 through 16. Each table can have a maximum of 100 entries, numbered 1 through 100. Tables 17 and 18, the Default Toll and Default Local tables respectively, cannot be changed.

The first entry in a 6-digit table must be the area code. Subsequent entries consist of exchanges within that area code.

Area code tables can contain only area codes. In Release 6.0 and later systems, these tables are often used to provide cost-efficient calling through private network lines/trunks connected to another system. The type of table required depends upon how users in the networked systems will employ networked lines. When you use ARS in this way, the ARS access code is only permitted on private trunks and is blocked from calls that arrive from the public switched network.

Exchange and 1 + 7-digit tables can contain only exchanges.

The wildcard character (Pause) cannot be used to enter area codes or exchanges in ARS tables.

Summary: ARS Tables

Programmable by	System Manager
Mode	Hybrid/PBX
Idle Condition	Not required
Planning Form	Form 3f, Automatic Route Selection Tables
Factory Setting	Not applicable
Valid Entries	Not applicable
Inspect	Yes
Copy Option	No
Console Procedure	`Tables`→`ARS`→`ARS Input`→Dial table no.→`Enter`→ Specify table type→`Enter`→Dial entry no.→`Enter`→ **Drop**→Dial no.→`Enter`→`Exit`→`Exit`
PC Procedure	[F8]→[F6]→[F2]→Type table no.→[F10]→Select table type→ [F10]→Type entry no.→[F10]→[Alt] + [P]→Type no.→ [F10]→[F5]→[F5]

Procedure: ARS Tables

Console/Display Instructions	Additional Information	PC

▶ 1. Select the Tables menu.

```
System Programming:      >
Make a selection
System          Extensions
SysRenumber     Options
Operator        Tables
LinesTrunks     AuxEquip
Exit            NightSrvce
```

F8

▶ 2. Select Automatic Route Selection.

```
Tables:
Make a selection
AllowList       ARS
AllowTo         UDP Routing
Disallow
DisallowTo
Exit
```

F6

▶ 3. Select ARS Table Input.

```
ARS:                     >
Make a selection
ARS 1+7Dial     SubA Absorb
ARS Input       Sub A Digit
Sub A Pools     Sub B Start
Sub A FRL       Sub B Stop
Exit            Sub B Pool
```

F2

Console/Display Instructions **Additional Information** **PC**

▶ **4. Enter the table number (*nn* = 1 to 16).**

```
ARS Table Type:
Enter table number (1-16)



Backspace
Exit            Enter
```

Dial or type [*nn*].

▶ **5. Save your entry.**

Select Enter. F10

▶ **6. Specify a table type.**

```
ARS Table xx:
Select one
6-Digit
Area Code
Exchange
1+7
Exit            Enter
```

xx = table number entered in Step 4

Select 6-Digit, F1
Area Code, F2
Exchange, or F3
1+7. F4

▶ **7. Save your entry.**

Select Enter. F10

▶ **8. Enter the table entry number (*nnn* = 1 to 100).**

```
Table xx:
Enter entry number
(1-100)



Backspace
Exit            Enter
```

xx = number entered in Step 4

Dial or type [*nnn*].

▶ **9. Save your entry.**

Select Enter. F10

Console/Display Instructions	Additional Information	PC
▶ **10. Erase the current entry (*nnn*).**		
ARS Table *xx*, Entry *xxx*: Enter area code or exchange nnn Backspace Next Exit Enter	*xx* = table number entered in Step 4 *xxx* = entry number entered in Step 8	
	Press **Drop**.	Alt + P
▶ **11. Enter an area code or exchange of up to 3 digits (0 to 9) to include in the table.**		
Dial or type [*nnn*].		
▶ **12. Continue to enter area code or exchange for another table entry number or go to Step 13.**		
Select Next.		F9
	Return to Step 10. The next table is displayed on Line 1.	
▶ **13. Save your entry.**		
Select Enter.		F10
▶ **14. Return to the System Programming menu.**		
Select Exit twice.		F5 F5

Start and Stop Times for Subpatterns

Use this procedure to specify the time of day that calls are routed using Subpattern B routing information.

Subpatterns are used to provide two different routing patterns according to the time of day. This allows you to take advantage of lower rates that may apply to some or all lines, or to change restrictions on some facilities during off hours.

The stop time for Subpattern B is the start time for Subpattern A.

Enter the time in 4-digit, 24-hour notation, and use leading zeros as necessary.

In Release 6.0 and later systems, if you are setting up ARS to allow local users to make cost-efficient calls on trunks connected to remote systems, you may wish to check with the remote system manager to ensure that routing stipulates the most cost-effective timing based on the rates at the remote location. If the remote system is in a different time zone from your own, you may need to take this into consideration as well

Summary: Start and Stop Times for Subpatterns

Programmable by	System Manager
Mode	Hybrid/PBX
Idle Condition	Not required
Planning Form	Form 3f, Automatic Route Selection Tables Form 3g, Automatic Route Selection Default and Special Numbers Tables
Factory Setting	No time is specified, thus all calls are routed according to Subpattern A.
Valid Entries	0000 to 2359
Inspect	No
Copy Option	No
Console Procedure	Tables→ARS→Sub B Start→Dial table no.→Enter→**Drop**→Dial start time→Enter→Sub B Stop→Dial table no.→Enter→**Drop**→Dial stop time→Enter→Exit→Exit
PC Procedure	F8→F6→F8→Type table no.→F10→Alt + P→Type start time→F10→F8→Type table no.→F10→Alt + P→Type stop time→F10→F5→F5

Procedure: Start and Stop Times for Subpatterns

Console/Display Instructions	Additional Information	PC
▶ **1. Select the Tables menu.**		
System Programming: > Make a selection System Extensions SysRenumber Options Operator Tables LinesTrunks AuxEquip Exit NightSrvce		F8

Console/Display Instructions **Additional Information** **PC**

▶ **2. Select Automatic Route Selection.**

```
Tables:
Make a selection
AllowList        ARS
AllowTo          UDP Routing
Disallow
DisallowTo
Exit
```

F6

▶ **3. Select Subpattern B Start.**

```
ARS:                      >
Make a selection
ARS 1+7Dial      SubA Absorb
ARS Input        Sub A Digit
Sub A Pools      Sub B Start
Sub A FRL        Sub B Stop
Exit             Sub B Pool
```

F8

▶ **4. Enter the table number (*nn* = 1 to 18).**

```
Subpattern B Start Time:
Enter table number (1-18)




Backspace
Exit             Enter
```

Dial or type [*nn*].

▶ **5. Save your entry.**

Select Enter.

F10

Console Display/Instructions **Additional Information** **PC**

▶ 6. Erase the current start time (*xxxx*).

```
Subpattern B Start Time:
Enter start time hour
(00-23) and min (00-59)
xxxx

Backspace
Exit            Enter
```

Press **Drop**. Alt+P

▶ 7. Enter the start time for Subpattern B (*hh* = 00 to 23, *mm* = 00 to 59).

Dial or type [*hhmm*].

▶ 8. Save your entry.

Select Enter. F10

▶ 9. Select Subpattern B Stop Time.

```
ARS:                    >
Make a selection
ARS 1+7Dial     SubA Absorb
ARS Input       Sub A Digit
Sub A Pools     Sub B Start
Sub A FRL       Sub B Stop
Exit            Sub B Pool
```

This is also the start time for Subpattern A.

F9

▶ 10. Enter the table number (*nn* = 1 to 18).

```
Subpattern B Stop Time:
Enter table number (1-18)

Backspace
Exit            Enter
```

Dial or type [*nn*].

▶ 11. Save your entry.

Select Enter. F10

Console Display/Instructions	Additional Information	PC
▶ 12. Erase the current stop time (*xxxx*).		
Subpattern B Stop Time: Enter stop time hour (00-23) and min (00-59) xxxx Backspace Exit Enter	Press **Drop**.	Alt + P
▶ 13. Enter the stop time for Subpattern B (*hh* = 00 to 23, *mm* = 00 to 59).		
Dial or type [*hhmm*].		↵
▶ 14. Save your entry.		
Select Enter.		F10
▶ 15. Return to the System Programming menu.		
Select Exit twice.		F5 F5

Pool Routing

Use this procedure to identify the trunk pools on which to route calls to area codes and/or exchanges included in ARS tables.

A maximum of six routes (numbered 1 through 6) can be specified for each subpattern. Pool routing is programmed for Tables 1 through 16. Tables 17 and 18, the Default Toll and Default Local tables respectively, are factory set to the main pool and can be changed.

NOTES:

1. In Release 6.0 and later, when routing for ARS 10*** and 101**** equal-access calls (Interexchange Carrier or IXC) from a private networked switch that is not connected to the public switched network and only has private network tandem trunks, the private network tandem trunks must be assigned to the main pool on the system where ARS is dialed. The ARS access code for the caller's system must match that of the system where the public switched network trunks are connected. For this reason, consider using the same ARS access code for all systems in the private network.

2. For Dial 0 and Special Numbers N11 calls (for example, 411 or 911) routed from systems with only private trunks, the private trunks must be assigned to the main pool, and the ARS access code of the remote system must be prepended to the dialed number (see "Dial 0 Table" on page 3–558 and "N11 Special Numbers Tables" on page 3–554). Therefore, ARS access codes should be the same.

Summary: Pool Routing

Programmable by	System Manager
Mode	Hybrid/PBX
Idle Condition	Not required
Planning Form	Form 3f, Automatic Route Selection Tables Form 3g, Automatic Route Selection Default and Special Numbers Tables
Factory Setting	Not applicable
Valid Entries	Not applicable
Inspect	No
Copy Option	No
Console Procedure	Tables→ARS→Sub A Pools or Sub B Pool→Dial table no. and pool route no.→Enter→Dial pool dial-out code→Enter→Exit→Exit
PC Procedure	F8→F6→F3 or F10→Type table no. and pool route no.→F10→Type pool dial-out code →F10→F5→F5

Procedure: Pool Routing

Console/Display Instructions	Additional Information	PC
▶ 1. Select the Tables menu.		
System Programming: > Make a selection System Extensions SysRenumber Options Operator Tables LinesTrunks AuxEquip Exit NightSrvce		F8

Console/Display Instructions **Additional Information** **PC**

▶ **2. Select Automatic Route Selection.**

```
Tables:
Make a selection
AllowList        ARS
AllowTo          UDP Routing
Disallow
DisallowTo
Exit
```

F6

▶ **3. Select pool routing for Subpattern A or B.** ● ◆

```
ARS:                    >
Make a selection
ARS 1+7Dial      SubA Absorb
ARS Input        Sub A Digit
Sub A Pools      Sub B Start
Sub A FRL        Sub B Stop
Exit             Sub B Pool
```

Select Sub A Pools and go to
● Subpattern A Procedure. F3

Select Sub B Pool and go to
◆ Subpattern B Procedure. F10

● Subpattern A Procedure

Console/Display Instructions **Additional Information** **PC**

▶ **1. Enter the table (*nn* = 1 to 18) and the pool route (*m* = 1 to 6) numbers.**

```
SubPattern A Pools:
Enter table (1-18) and
route (1-6)



Backspace
Exit             Enter
```

Dial or type [*nnm*].

▶ **2. Save your entry.**

Select Enter. F10

Console/Display Instructions **Additional Information** **PC**

▶ **3. Enter a pool dial-out code of up to 3 digits on which to route calls.**

```
ARS Pool Tablexx Routex:
Enter pool dialout code



Backspace        Next
Exit             Enter
```

xx = table number entered in Step 1
x = route number entered in Step 1

Dial or type [*nnn*].

▶ **4. Continue to enter pool dial-out code(s) for another route or go to Step 5.**

Select Next. F9

Return to Step 3. The next route is displayed on Line 1.

▶ **5. Save your entry.**

Select Enter. F10

▶ **6. Return to the System Programming menu.**

Select Exit twice. F5 F5

◆ **Subpattern B Procedure**

Console/Display Instructions **Additional Information** **PC**

▶ **1. Enter the table (*nn* = 1 to 18) and the pool route (*m* = 1 to 6) numbers.**

```
ARS Route Pattern:
Enter table (1-18) route
(1-6)



Backspace
Exit             Enter
```

Dial or type [*nnm*].

▶ **2. Save your entry.**

Select Enter. F10

Console/Display Instructions **Additional Information** **PC**

▶ 3. Enter a pool dial-out code of up to 3 digits on which to route calls.

```
ARS Pool (xx,x):
Enter pool dialout code



Backspace        Next
Exit             Enter
```

xx = table number entered in Step 1
x = route number entered in Step 1

Dial or type [*nnn*].

▶ 4. Continue to enter pool dial-out code(s) for another route or go to Step 5.

Select Next. F9

Return to Step 3. The next route is displayed on Line 1.

▶ 5. Save your entry.

Select Enter. F10

▶ 6. Return to the System Programming menu.

Select Exit twice. F5 F5

Facility Restriction Level

Use this procedure to assign a Facility Restriction Level (FRL) to each route. The FRL ranges from 0 (least restrictive) to 6 (most restrictive) and is used to restrict user access to the route. The FRL assigned to extensions and remote access users is the opposite of the FRL assigned to routes, where 0 is the most restrictive and 6 is the least restrictive.

NOTE:
Pool routes must be programmed before you assign Facility Restriction Levels.

Facility Restriction Levels are assigned to Tables 1 through 18. Tables 17 and 18, the Default Toll and Default Local tables respectively, cannot be changed.

Summary: Facility Restriction Level

Programmable by	System Manager
Mode	Hybrid/PBX
Idle Condition	Not required
Planning Form	Form 3f, Automatic Route Selection Tables Form 3g, Automatic Route Selection Default and Special Numbers Tables
Factory Setting	3 (beginning with Release 3.1, Table 18, the Default Local table has a factory setting of 2)
Valid Entries	0 to 6
Inspect	No
Copy Option	No
Console Procedure	Tables→ARS→Sub A FRL or More and Sub B FRL→Dial table no, and pool route no.→Enter→Dial restriction level→Enter→Exit→Exit
PC Procedure	F8→F6→F4 or PgUp and F1→Type table no. and pool route no.→F10→Type restriction level→F10→F5→F5

Procedure: Facility Restriction Level

Console Display/Instructions	Additional Information	PC
▶ 1. Select the Tables menu.		
System Programming: > Make a selection System Extensions SysRenumber SysRenumber Operator Tables LinesTrunks AuxEquip Exit NightSrvce		F8

Console/Display Instructions **Additional Information** **PC**

▶ **2. Select Automatic Route Selection.**

```
Tables:
Make a selection
AllowList        ARS
AllowTo          UDP Routing
Disallow
DisallowTo
Exit
```

F6

▶ **3. Select Facility Restriction Level for Subpattern A or B.** ● ◆

```
ARS:                    >
Make a selection
ARS 1+7Dial      SubA Absorb
ARS Input        Sub A Digit
Sub A Pools      Sub B Start
Sub A FRL        Sub B Stop
Exit             Sub B Pool
```

Select Sub A FRL and go to F4
● Subpattern A Procedure.

Press **More**, select Sub B FRL, and go to PgUp
◆ Subpattern B Procedure. F1

● **Subpattern A Procedure**

Console/Display Instructions **Additional Information** **PC**

▶ **1. Enter the table (*nn* = 1 to 18) and the pool route (*m* = 1 to 6) numbers.**

```
Sub A Restriction Level:
Enter table (1-18), route
(1-6)



Backspace
Exit             Enter
```

Dial or type [*nnm*].

▶ **2. Save your entry.**

Select Enter. F10

Console/Display Instructions **Additional Information** **PC**

▶ **3. Enter the restriction level (*n* = 0 to 6).**

```
ARS Table xx Route x:
Enter restriction level
(0-6)

Backspace        Next
Exit             Enter
```

xx = table number entered in Step 1
x = route number entered in Step 1

Dial or type [*n*].

▶ **4. Continue to enter FRL for another pool route or go to Step 5.**

Select Next. F9

Return to Step 3. The next pool route is displayed on Line 1.

▶ **5. Save your entry.**

Select Enter. F10

▶ **6. Return to the System Programming menu.**

Select Exit twice. F5 F5

◆ **Subpattern B Procedure**

Console/Display Instructions **Additional Information** **PC**

▶ **1. Enter the table (*nn* = 1 to 18) and the pool route (*m* = 1 to 6) numbers.**

```
Subpattern B Restriction:
Enter table (1-18), route
(1-6)

Backspace
Exit             Enter
```

Dial or type [*nnm*].

▶ **2. Save your entry.**

Select Enter. F10

Console Display/Instructions **Additional Information** **PC**

▶ 3. Enter the restriction level (*n* = 0 to 6).

```
ARS Table xx Route x:
Enter restriction level
(0-6)

Backspace        Next
Exit             Enter
```

xx = table number entered in Step 1
x = route number entered in Step 1

Dial or type [*n*].

▶ 4. Continue to enter FRL for another pool route or go to Step 5.

Select Next. F9

Return to Step 3. The next route is displayed on Line 1.

▶ 5. Save your entry.

Select Enter. F10

▶ 6. Return to the System Programming menu.

Select Exit twice. F5 F5

Digit Absorption

Use this procedure to specify how many of the digits dialed (0 through 11) by the caller should be absorbed (not sent to the telephone company's central office) by the system when a call is made on an identified route.

Entries of 1 through 11 indicate that the system should not send the specified number of digits, starting with the first digit dialed by the user after the dial-out code.

Digit absorption is assigned to Tables 1 through 18.

NOTES:

1. Pool routes must be programmed before you assign digit absorption.
2. In Release 6.0 and later systems where remote users will dial out via private network lines, absorbed digits are often useful. For example, if remote callers are in the 908 area code but your system is in the 617 area code, callers might dial 9161755512 12, where 9 is the remote ARS access code. Because the call is a local call on the remote system, the absorbed digits on that system would be 1617.

Summary: Digit Absorption

Programmable by	System Manager
Mode	Hybrid/PBX
Idle Condition	Not required
Planning Form	Form 3f, Automatic Route Selection Tables
Factory Setting	0
Valid Entries	0 to 11
Inspect	No
Copy Option	No
Console Procedure	Tables→ARS→SubA Absorb or **More** and SubB Absorb→ Dial table no. and pool route no.→Enter→**Drop**→Dial no. of digits to absorb→Enter→Exit→Exit
PC Procedure	F8→F6→F6 or PgUp and F2→Type table no. and pool route no.→F10→Alt + P→Type no. of digits to absorb→ F10→F5→F5

Procedure: Digit Absorption

Console/Display Instructions	Additional Information	PC
▶ **1. Select the Tables menu.**		
System Programming: > Make a selection System Extensions SysRenumber Options Operator Tables LinesTrunks AuxEquip Exit NightSrvce		F8
▶ **2. Select Automatic Route Selection.**		
Tables: Make a selection AllowList ARS AllowTo UDP Routing Disallow DisallowTo Exit		F6

Console/Display Instructions **Additional Information** **PC**

▶ 3. Select absorb digits for Subpattern A or B. ● ◆

```
ARS:                    >
Make a selection
ARS 1+7Dial     SubA Absorb
ARS Input       Sub A Digit
Sub A Pools     Sub B Start
Sub A FRL       Sub B Stop
Exit            Sub B Pool
```

Select Sub A Absorb and go to ● Subpattern A Procedure. F4

Press **More**, select Sub B Absorb, and go to ◆ Subpattern B Procedure. PgUp F1

● Subpattern A Procedure

Console/Display Instructions **Additional Information** **PC**

▶ 1. Enter the table (*nn* = 1 to 18) and the pool route (*m* = 1 to 6) numbers.

```
Subpattern A Absorption:
Enter table (1-18), route
(1-6)



Backspace
Exit            Enter
```

Dial or type [*nnm*].

▶ 2. Save your entry.

Select Enter. F10

▶ 3. Erase the current number of absorbed digits (*nn*).

```
ARS Table xx Route x:
Enter table absorption
digits (0-11)
nn

Backspace       Next
Exit            Enter
```

xx = table number entered in Step 1
x = route number entered in Step 1

Press **Drop**. Alt + P

▶ 4. Enter the number of digits to be absorbed (*nn* = 1 to 11).

Dial or type [*nn*].

Console/Display Instructions	Additional Information	PC
▶ **5. Continue to enter absorbed digits for another route number for Subpattern A or go to Step 6.**		
Select Next.		F9
	Return to Step 3. The next route number is displayed on Line 1.	
▶ **6. Save your entry.**		
Select Enter.		F10
▶ **7. Return to the System Programming menu.**		
Select Exit twice.		F5 F5

◆ **Subpattern B Procedure**

Console/Display Instructions	Additional Information	PC
▶ **1. Enter the table (*nn* = 1 to 18) and the pool route (*m* = 1 to 6) numbers.**		
Sub B Absorption Enter table (1-18), route (1-6) Backspace Exit Enter	Dial or type [*nnm*].	
▶ **2. Save your entry.**		
Select Enter.		F10
▶ **3. Erase the current number of absorbed digits (*nn*).**		
ARS Table *xx* Route *x*: Enter number of digits to absorb (0-11) nn Backspace Next Exit Enter	*xx* = table number entered in Step 1 *x* = route number entered in Step 1 Press **Drop**.	Alt + P

Console/Display Instructions	Additional Information	PC
▶ **4. Enter the number of digits to be absorbed (*nn* = 1 to 11).**		
Dial or type [*nn*].		⇐
▶ **5. Continue to enter absorbed digits for another route number for Subpattern B or go to Step 6.**		
Select Next.		F9
	Return to Step 3. The next route number is displayed on Line 1.	
▶ **6. Save your entry.**		
Select Enter.		F10
▶ **7. Return to the System Programming menu.**		
Select Exit twice.		F5 F5

Other Digits

Use this procedure to specify other (extra) digits that must be added by the system to the beginning of the number dialed by the caller, when calls are placed on an identified route.

NOTES:

1. Pool routes must be programmed before you assign other digits.
2. In Release 6.0 and later systems where ARS calls will be made from lines/trunks connected to a remote private network system, the local ARS feature adds (prepends) the ARS access code of the remote system.

A maximum of 20 digits can be added, in any combination of the digits 0 through 9.

Special characters such as switchhook flash, Stop, and # cannot be included as extra digits. Pause is allowed in every position but the first.

Other digits are assigned to Tables 1 through 18.

Summary: Other Digits

Programmable by	System Manager
Mode	Hybrid/PBX
Idle Condition	Not required
Planning Form	Form 3f, Automatic Route Selection Tables
Factory Setting	0
Valid Entries	Up to 20 digits (any combination of 0 to 9)
Inspect	No
Copy Option	No
Console Procedure	Tables→ARS→Sub A Digit or **More** and Sub BDigit→ Dial table no. and pool route no.→Enter→**Drop**→Dial digits to be added→Enter→Exit→Exit
PC Procedure	F8→F6→F7 or PgUp and F3→Type table no. and pool route no.→F10→Alt + P→Type digits to be added→F10→F5→F5

Procedure: Other Digits

Console/Display Instructions **Additional Information** **PC**

▶ 1. Select the Tables menu.

```
System Programming:      >
Make a selection
System          Extensions
SysRenumber     Options
Operator        Tables
LinesTrunks     AuxEquip
Exit            NightSrvce
```

F8

▶ 2. Select Automatic Route Selection.

```
Tables:
Make a selection
AllowList       ARS
AllowTo         UDP Routing
Disallow
DisallowTo
Exit
```

F6

Console/Display Instructions	Additional Information	PC

▶ 3. Select other digits for Subpattern A or B.

```
ARS:                    >
Make a selection
ARS 1+7Dial     SubA Absorb
ARS Input       Sub A Digit
Sub A Pools     Sub B Start
Sub A FRL       Sub B Stop
Exit            Sub B Pool
```

Select Sub A Digit. F7

Press **More** and PgUp
select Sub B Digit. F3

▶ 4. Enter the table (*nn* = 1 to 18) and the route (*m* = 1 to 6) number.

```
Sub x Other Digits:
Enter table (1-18), route
(1-6)



Backspace
Exit            Enter
```

x = subpattern selected in Step 3

Dial or type [*nnm*].

▶ 5. Save your entry.

Select Enter. F10

▶ 6. Erase the current number of other digits (*n*).

```
ARS Table xx, Route x:  >
Enter other digits
n



Backspace       Next
Exit            Enter
```

xx = table number entered in Step 4
x = route number entered in Step 4

Press **Drop**. Alt+P

▶ 7. Enter up to 20 other digits (*n* = any combination of 0 to 9).

Dial or type [*n*].

Console/Display Instructions	Additional Information	PC
▶ **8. Continue to specify other digits for another route in the specified subpattern or go to Step 9.**		
Select Next.		F9
	Return to Step 6. The next route number is displayed on Line 1.	
▶ **9. Save your entry.**		
Select Enter.		F10
▶ **10. Return to the System Programming menu.**		
Select Exit twice.		F5 F5

N11 Special Numbers Tables

Use this procedure to specify Facility Restriction Level (FRL) and/or digits that must be added when emergency numbers in the N11 Special Numbers table are dialed (for example, 411, 811, or 911).

Subpattern B, absorb, and pool routing cannot be programmed for the N11 Special Numbers tables.

NOTE:
In Release 6.0 and later systems, when routing for ARS Special Numbers N11 calls from a private network switch that is not connected to the public switched network, the private trunks must be assigned to the main pool (factory set to 70). The local system must prepend the ARS access code of the connected switch from which the calls will be directed to the public switched network.

Summary: N11 Special Numbers Tables

Programmable by	System Manager
Mode	Hybrid/PBX
Idle Condition	Not required
Planning Form	Form 3g, Automatic Route Selection Default and Special Numbers Tables
Factory Setting	Not applicable
Valid Entries	Not applicable
Inspect	No
Copy Option	No

Console Procedure

To change Facility Restriction Level:
Tables→ARS→**More**→SpeclNumber→ARS FRL→**Drop**→
Dial FRL value→Enter→Exit→Exit→Exit

To program other digits:
Tables→ARS→**More**→SpeclNumber→ARS Digit→
Drop→Dial digits→Enter→Exit→Exit→Exit

PC Procedure

To change Facility Restriction Level:
[F8]→[F6]→[PgUp]→[F4]→[F1]→[Alt] + [P]→
Type FRL value→[F10]→[F5]→[F5]

To program other digits:
[F8]→[F6]→[PgUp]→[F4]→[F2]→[Alt] + [P]→Type digits→
[F10]→[F5]→[F5]

Procedure: N11 Special Numbers Tables

Console/Display Instructions	Additional Information	PC
▶ **1. Select the Tables menu.**		
System Programming: >		
Make a selection		
System Extensions		
SysRenumber Options		
Operator Tables		
LinesTrunks AuxEquip		
Exit NightSrvce		F8
▶ **2. Select Automatic Route Selection.**		
Tables:		
Make a selection		
AllowList ARS		
AllowTo UDP Routing		
Disallow		
DisallowTo		
Exit		F6

Console/Display Instructions **Additional Information** **PC**

▶ **3. Go to the second screen of the ARS menu.**

```
ARS:                    >
Make a selection
ARS 1+7Dial     SubA Absorb
ARS Input       Sub A Digit
Sub A Pools     Sub B Start
Sub A FRL       Sub B Stop
Exit            Sub B Pool
```

Press **More**. PgUp

▶ **4. Select N11 Special Numbers Table.**

```
ARS:
Make a selection
Sub B FRL       Dial 0
SubB Absorb     Sub A Data
Sub B Digit     Sub B Data
SpeclNumber
Exit
```

F4

▶ **5. Select an option.** ● ◆

```
ARS Specl Numbers Table:
Make a selection
ARS FRL
ARS Digit
```

To change the current Facility Restriction Level, select ARS FRL and go to ● Change FRL Procedure. F1

To specify other digits to add, select ARS Digit, and go to ◆ Other Digits Procedure. F2

● Change FRL Procedure

Console/Display Instructions	Additional Information	PC

▶ 1. Erase the current restriction level (*x*).

```
Special Numbers Pool:
Enter restriction level
(0-6)
x

Backspace
Exit            Enter
```

Press **Drop**. Alt + P

▶ 2. Enter an FRL value (*n* = 0 to 6).

Dial or type [*n*].

▶ 3. Save your entry.

Select Enter. F10

▶ 4. Return to the System Programming menu.

Select Exit twice. F5 F5

◆ Other Digits Procedure

Console Display/Instructions	Additional Information	PC

▶ 1. Erase the current other digits (*x*).

```
Special Numbers Digits:
Enter other digits

x

Backspace
Exit            Enter
```

Press **Drop**. Alt + P

▶ 2. Enter up to 20 other digits (*n* = any combination of 0 to 9).

Dial or type [*n*].

▶ 3. Save your entry.

Select Enter. F10

▶ 4. Return to the System Programming menu.

Select Exit twice. F5 F5

Dial 0 Table

Use this procedure to specify pool routing, Facility Restriction Level (FRL), and Other Digits for the Dial 0 table.

Only one route can be specified. The Subpattern B route cannot be specified for this table, and digit absorption cannot be specified.

NOTE:
In Release 6.0 and later systems, when routing for ARS Dial 0 calls via a private network switch that is not connected to the public switched network, the external private trunks must be assigned to a pool, and the ARS access code must be prepended to the dialed number using this procedure.

Summary: Dial 0 Table

Programmable by	System Manager
Mode	Hybrid/PBX
Idle Condition	Not required
Planning Form	Form 3g, Automatic Route Selection Default and Special Numbers Tables
Factory Setting	3
Valid Entries	0 to 6
Inspect	No
Copy Option	No
Console Procedure	Tables→ARS→**More**→Dial 0→ARS Pool or ARS FRL or ARS Digits→Dial value→Enter→Exit→Exit→Exit
PC Procedure	F8→F6→PgUp→F6→F1 or F2 or F3→Type value→F10→F5→F5→F5

Procedure: Dial 0 Table

Console/Display Instructions	Additional Information	PC
▶ **1. Select the Tables menu.**		
System Programming: > Make a selection System Extensions SysRenumber Options Operator Tables LinesTrunks AuxEquip Exit NightSrvce		F8

Console/Display Instructions **Additional Information** **PC**

▶ 2. Select Automatic Route Selection.

```
Tables:
Make a selection
AllowList        ARS
AllowTo          UDP Routing
Disallow
DisallowTo
Exit
```

F6

▶ 3. Go to the second screen of the ARS menu.

```
ARS:                        >
Make a selection
ARS 1+7Dial      SubA Absorb
ARS Input        Sub A Digit
Sub A Pools      Sub B Start
Sub A FRL        Sub B Stop
Exit             Sub B Pool
```

Press **More**. PgUp

▶ 4. Select Dial 0.

```
ARS:
Make a selection
Sub B FRL        Dial 0
SubB Absorb      Sub A Data
Sub Digit        Sub B Data
SpeclNumber
Exit
```

F6

▶ 5. Specify an option. ● ◆ ■

```
Operator Assist Calls:
Make a selection
ARS Pool
ARS FRL
ARS Digits

Exit
```

To program pool routing, select ARS Pool and go to ● ARS Pool Procedure. F1

To change the current FRL Level, select ARS FRL and go to ◆ ARS FRL Procedure. F2

To change other digits, select ARS Digits and go to ■ ARS Digits Procedure. F3

● ARS Pool Procedure

Console/Display Instructions	Additional Information	PC
▶ 1. Erase the current pool dial-out code (*xxx*).		
Dial 0 Pool: Enter pool dialout code xxx Backspace Exit Enter	Press **Drop**.	Alt+P
▶ 2. Enter a pool dial-out code of up to 3 digits.		
Dial or type [*nnn*].		⊖
▶ 3. Save your entry.		
Select Enter.		F10
▶ 4. Return to the System Programming menu.		
Select Exit three times.		F5 F5 F5

◆ ARS FRL Procedure

Console/Display Instructions	Additional Information	PC
▶ 1. Erase the current restriction level (*x*).		
Dial 0 Restriction: Enter restriction level (0-6) x Backspace Exit Enter	Press **Drop**.	Alt+P
▶ 2. Enter a restriction level (*n* = 0 to 6).		
Dial or type [*n*].		⊖

Console/Display Instructions	Additional Information	PC
▶ **3. Save your entry.**		
Select Enter.		F10
▶ **4. Return to the System Programming menu.**		
Select Exit three times.		F5 F5 F5

■ ARS Digits Procedure

Console/Display Instructions	Additional Information	PC
▶ **1. Erase the current other digits (*x*).**		
Dial 0 Other Digits Enter other digits x Backspace Exit Enter	Press **Drop**.	Alt + P
▶ **2. Enter up to 20 other digits (*n* = any combination of 0 to 9).**		
Dial or type [*n*].		
▶ **3. Save your entry.**		
Select Enter.		F10
▶ **4. Return to the System Programming menu.**		
Select Exit three times.		F5 F5 F5

Voice and/or Data Routing

Use this procedure to route voice, data, or voice and data. The voice/data specification is used mainly in conjunction with PRI. See "PRI Facilities" on page 3–183 especially its subtopic, "Outgoing Tables" on page 3–238.

Voice/data routes can be associated with Subpattern A or Subpattern B.

Summary: Voice and/or Data Routing

Programmable by	System Manager
Mode	Hybrid/PBX
Idle Condition	Not required
Planning Form	Form 3g, Automatic Route Selection Default and Special Numbers Tables
Factory Setting	Voice
Valid Entries	Voice Only, Data Only, Voice/Data
Inspect	No
Copy Option	No
Console Procedure	Tables→ARS→**More**→Sub A Data or Sub B Data→ Dial table no. and route no.→Enter→Select capability→ Enter→Exit→Exit
PC Procedure	F8→F6→PgUp→F7 or F8→Type table no. and route no.→F10→Select capability→F10→F5→F5

Procedure: Voice and/or Data Routing

Console/Display Instructions	Additional Information	PC
▶ **1. Select the Tables menu.**		
System Programming: > Make a selection System Extensions SysRenumber Options Operator Tables LinesTrunks AuxEquip Exit NightSrvce		F8

Console/Display Instructions **Additional Information** **PC**

▶ **2. Select Automatic Route Selection.**

```
Tables:
Make a selection
AllowList        ARS
AllowTo          UDP Routing
Disallow
DisallowTo
Exit
```

F6

▶ **3. Go to the second screen of the ARS menu.**

```
ARS:                      >
Make a selection
ARS 1+7Dial      SubA Absorb
ARS Input        Sub A Digit
Sub A Pools      Sub B Start
Sub A FRL        Sub B Stop
Exit             Sub B Pool
```

Press **More**. PgUp

▶ **4. Select Subpattern A or B.**

```
Tables:
Make a selection
Sub B FRL        Dial 0
SubB Absorb      Sub A Data
Sub Digit        Sub B Data
SpeclNumber
Exit
```

Select Sub A Data or F7
Sub B Data. F8

▶ **5. Enter the table (*nn* = 1 to 18) and route (*m* = 1 to 6) numbers for Subpattern A or B.**

```
Subpattern x Voice/Data:
Enter table (1-18), route
(1-6)



Backspace
Exit             Enter
```

x = option name selected in Step 4

Dial or type [*nnm*].

Console/Display Instructions	Additional Information	PC
▶ **6. Save your entry.**		
Select Enter.		F10
▶ **7. Select the appropriate capability.**		
ARS Pool Tablexx Routex: Select capability Voice Only Data Only Voice/Data Next Exit Enter	xx = table number entered in Step 5 x = route number entered in Step 5	
	Select Voice Only,	F1
	Data Only, or	F2
	Voice/Data.	F3
▶ **8. Continue to specify other entries for another route or go to Step 9.**		
Select Next.		F9
	Return to Step 7. The next route number is displayed on Line 1.	
▶ **9. Save your entry.**		
Select Enter.		F10
▶ **10. Return to the System Programming menu.**		
Select Exit twice.		F5 F5

Uniform Dial Plan Routing

This section includes programming procedures for assigning Uniform Dial Plan (UDP) Routing, available for Hybrid/PBX mode in Release 6.0 and later systems only.

UDP Routing is very similar to Automatic Route Selection (ARS). UDP Routing allows system users to reach non-local extensions at a remote DEFINITY or MERLIN LEGEND Communications System that is connected to the local system in a private network. Users simply dial the non-local extension number as they would an inside extension number. Then UDP Routing associates the dialed extension number with one of up to 20 programmed patterns. For each pattern, you can specify up to four routes. For each route, you specify a pool dial-out code. Then you can program Facility Restriction Levels (FRLs), absorbed digits, added digits, and voice and/or data capability.

NOTE:
Before assigning routes, patterns must be assigned to non-local extensions, which is part of the numbering of the extensions. To perform this procedure, see "Non-Local Dial Plan Extension Ranges" on page 3–32.

This section contains programming procedures for the following UDP Routing features:

- UDP Pool Routing
- Facility Restriction Level (FRL)
- Digit Absorption
- Other Digits
- Voice and/or Data Routing

SECURITY ALERT:
Do not include the ARS codes of non-local systems in the non-local dial plan, or calling restrictions may be violated.

Refer to the *Network Reference* for additional information.

UDP Pool Routing

Before beginning this procedure, assign tandem tie or PRI trunks to pools. To do so, see "Trunks to Pools Assignment" on page 3–91. In UDP routing, routes (1–4) are associated with patterns, which are assigned first. Each route has various attributes (FRL, digit absorption, and so on) for call delivery. You may assign from one to four routes, with Route 1 having the highest priority. See the *Network Reference* for additional information.

In many cases, only one pool may be needed. However, multiple pools can help prioritize certain types of calls and maximize the used of shared facilities.

PRI tandem trunk pools, if available, should be included in the first route.

SECURITY ALERT:
In Release 6.0 and later systems (Hybrid/PBX mode only), do not provide dial access to PRI or tie tandem trunk pools or assign these trunk pools to buttons on telephones or DSS buttons. Use ARS to provide access to a remote private network system's trunks for making outside calls. System users can reach extensions on the remote system by using normal calling procedures.

Summary: UDP Pool Routing

Programmable by	System Manager
Mode	Hybrid/PBX
Idle Condition	Not required
Planning Form	Non-Local Dial Plan Administration Form in the Installation Specification
Factory Setting	Not applicable
Valid Entries	Routes (1–4)
Inspect	Yes
Copy Option	No
Console Procedure	`Tables`→`UDP Routing`→Dial pattern no.→`Enter`→ Dial route no.→`Enter`→`Pool`→Dial pool dial-out code→ `Enter`→`Exit`→`Exit`→`Exit`→`Exit`
PC Procedure	[F8]→[F7]→Type pattern no.→[F10]→Type route no.→ [F10]→[F1]→Type pool dial-out code→[F10]→ [F5]→[F5]→[F5]→[F5]

Procedure: UDP Pool Routing

Console/Display Instructions	Additional Information	PC
1. Select the Tables menu.		
System Programming: > Make a selection System Extensions SysRenumber Options Operator Tables LinesTrunks AuxEquip Exit NightSrvce		F8
2. Select UDP Routing.		
Tables: Make a selection AllowList ARS AllowTo UDP Routing Disallow DisallowTo Exit		F7
3. Enter the number of the pattern (*nn* = 1 to 20) for the route and pool.		
UDP Routing Enter pattern number (1-20) Backspace Exit Enter	Dial or type [*nn*].	
4. Save your entry.		
Select Enter.		F10

Console/Display Instructions **Additional Information** **PC**

▶ 5. Enter the route number (*n* = 1 to 4).

```
UDP Pattern xx:
Enter route number (1-4)



Backspace
Exit            Enter
```

xx = pattern number entered in Step 3

Dial or type [*n*].

▶ 6. Save your entry.

Select Enter. F10

▶ 7. Select Pool.

```
UDP Pattern xx  Route x:
Make a selection
Pool            Data
FRL
Absorb
Digits
Exit
```

xx = pattern number entered in Step 3
x = route number entered in Step 5

F1

▶ 8. Enter a pool dial-out code, up to 4 digits, on which to route calls.

```
UDP Pattern xx Route x:
Enter pool dialout code



Backspace       Next
Exit            Enter
```

xx = pattern number entered in Step 3
x = route number entered in Step 5

Dial or type [*nnnn*].

▶ 9. Continue to enter a pool dial-out code for another route, or go to Step 10.

Select Next. F9

Return to Step 8. The next route number is displayed on Line 1.

▶ 10. Save your entry.

Select Enter. F10

▶ 11. Return to the System Programming menu.

Select Exit four times. F5 F5 F5 F5

UDP Facility Restriction Level

Use this procedure to assign a Facility Restriction Level (FRL) to each UDP route. The FRL ranges from 0 (least restrictive) to 6 (most restrictive) and prevents users from accessing the route. The FRL assigned to extensions and remote access users is the opposite of the FRL assigned to routes, with 0 being most restrictive FRL, and 6 the least restrictive. A call will succeed if the extension's (or remote access) FRL is greater than or equal to the facility's FRL.

FRLs assigned to extensions (or remote access) apply not only to ARS calls but also to calls for non-local dial plan extensions connected by private trunks to your local system. For this reason, use care in assigning FRLs both to extensions and to UDP routes. For example, if a user must be restricted from toll calls on your local system, you may need to plan UDP routes' FRLs to be unrestricted, so that the user can reach necessary non-local dial plan extensions. For information about assigning FRLs to extensions, see "ARS Restriction Level for Extensions" on page 3–327.

NOTES:

1. UDP pool routes must be programmed before you assign Facility Restriction Levels to those routes.
2. Extension outward and toll calling restrictions are removed when a user dials a non-local dial plan extension. However, FRL extension restrictions remain in effect but are not sent with the call.
3. If you have Centralized Voice Messaging, program an FRL of 0 for the routes used to send calls to Centralized Voice Messaging. See the *Network Reference* for additional information.

Summary: UDP Route Facility Restriction Level

Programmable by	System Manager
Mode	Hybrid/PBX
Idle Condition	Not required
Planning Form	Non-Local Dial Plan Administration Form in the Installation Specification
Factory Setting	3
Valid Entries	0 to 6
Inspect	No
Copy Option	No
Console Procedure	`Tables`→`UDP Routing`→Dial pattern no.→`Enter`→ Dial route no.→`Enter`→`FRL`→Dial restriction level→ `Enter`→`Exit`→`Exit`→`Exit`→`Exit`
PC Procedure	[F8]→[F7]→Enter pattern no.→[F10]→Type route no.→ [F10]→[F2]→Type restriction level→[F10]→[F5]→ [F5]→[F5]→[F5]

Procedure: UDP Route Facility Restriction Level

Console Display/Instructions	Additional Information	PC

▶ 1. Select the Tables menu.

```
System Programming:      >
Make a selection
System          Extensions
SysRenumber     Options
Operator        Tables
LinesTrunks     AuxEquip
Exit            NightSrvce
```

F8

▶ 2. Select UDP Routing.

```
Tables:
Make a selection
AllowList       ARS
AllowTo         UDP Routing
Disallow
DisallowTo
Exit
```

F7

▶ 3. Enter the number of the pattern (*nn* = 1 to 20).

```
UDP Routing
Enter pattern number
(1-20)



Backspace
Exit            Enter
```

Dial or type [*nn*].

▶ 4. Save your entry.

Select Enter.

F10

Console/Display Instructions **Additional Information** **PC**

▶ 5. Enter the route number (*n* = 1 to 4).

```
UDP Pattern xx:
Enter route number (1-4)



Backspace
Exit            Enter
```

xx = pattern number entered in Step 3

Dial or type [*n*].

▶ 6. Save your entry.

Select Enter. F10

▶ 7. Select FRL (Facility Restriction Level).

```
UDP Pattern xx Route x:
Make a selection
Pool            Data
FRL
Absorb
Digits
Exit
```

xx = pattern number entered in Step 3
x = route number entered in Step 5

F2

▶ 8. Enter a restriction level (*n* = 0 to 6).

```
UDP Pattern xx Route x:
Enter restriction level
(0-6)



Backspace       Next
Exit            Enter
```

xx = pattern number entered in Step 3
x = route number entered in Step 5

Dial or type [*n*].

Console/Display Instructions	Additional Information	PC
▶ **9. Continue to enter a restriction level for another route in the pattern or go to Step 10.**		
Select Next.		F9
	Return to Step 8. The next route number is displayed on Line 1.	
▶ **10. Save your entry.**		
Select Enter.		F10
▶ **11. Return to the System Programming menu.**		
Select Exit four times.		F5 F5 F5 F5

UDP Digit Absorption

Use this procedure to specify how many of the digits dialed (0 to 11) by the caller should be absorbed (not sent over the trunk) by the system when a UDP call to a non-local extension is made on an identified route. Therefore, if the number is dialed without a pool access code or without using a **Pool** button, the dialed digits correspond to the non-local dial plan numbering. Digit absorption can be used to modify the digits that are actually sent to the remote system.

Entries of 1 through 11 indicate that the system should not send the specified number of digits, starting with the first digit dialed by the user.

NOTES:

1. UDP pool routes must be programmed before you assign digit absorption.

2. Do not use this procedure to overcome conflicts between local and remote extension numbering. Such conflicts can result in numerous problems with system features.

Summary: UDP Digit Absorption

Programmable by	System Manager
Mode	Hybrid/PBX
Idle Condition	Not required
Planning Form	Non-Local Dial Plan Administration Form in the Installation Specification
Factory Setting	0
Valid Entries	0 to 11
Inspect	No
Copy Option	No
Console Procedure	Tables→UDP Routing→Dial pattern no.→Enter→Dial route no.→Enter→Absorb→**Drop**→Dial number of absorption digits→ Enter→Exit→Exit→Exit→Exit
PC Procedure	F8→F7→Enter pattern no.→F10→Type route no.→F10→F3→Alt+P→Type number of digits to absorb→F10→F5→F5→F5→F5

Procedure: UDP Digit Absorption

Console/Display Instructions	Additional Information	PC
▶ 1. Select the Tables menu.		
System Programming: > Make a selection System Extensions SysRenumber Options Operator Tables LinesTrunks AuxEquip Exit NightSrvce		F8
▶ 2. Select UDP Routing.		
Tables: Make a selection AllowList ARS AllowTo UDP Routing Disallow DisallowTo Exit		F7

Console/Display Instructions **Additional Information** **PC**

▶ **3. Enter the number of the pattern (*nn* = 1 to 20).**

```
UDP Routing
Enter pattern number
(1-20)



Backspace
Exit            Enter
```

Dial or type [*nn*].

▶ **4. Save your entry.**

Select Enter. F10

▶ **5. Enter the route number (*n* = 1 to 4).**

```
UDP Pattern xx:
Enter route number (1-4)



Backspace
Exit            Enter
```

xx = pattern number entered in Step 3

Dial or type [*n*].

▶ **6. Save your entry.**

Select Enter. F10

▶ **7. Select Absorb.**

```
UDP Pattern xx Route x:
Make a selection
Pool            Data
FRL
Absorb
Digits
Exit
```

xx = pattern number entered in Step 3
x = route number entered in Step 5

F3

Console/Display Instructions	Additional Information	PC

▶ 8. Erase the current number of absorbed digits (*nn*).

```
UDP Pattern xx Route x:
Enter number absorption
digits (0-11)
nn

Backspace        Next
Exit             Enter
```

xx = pattern number entered in Step 3
x = route number entered in Step 1

Press **Drop** or select Backspace. Alt + P / F4

▶ 9. Enter the number of digits to be absorbed (*nn* = 0 to 11).

Dial or type [*nn*]. ⊖

▶ 10. Continue to enter absorbed digits for another route or go to Step 11.

Select Next. F9

Return to Step 8. The next route number is displayed on Line 1.

▶ 11. Save your entry.

Select Enter. F10

▶ 12. Return to the System Programming menu.

Select Exit four times. F5 F5 F5 F5

UDP Other Digits

Use this procedure to specify other (extra) digits that must be added by the system to the beginning of the dialed digits when calls are placed on an identified route. You may need to prepend a digit in order to accommodate the 5-digit numbering of DEFINITY Communications System extensions in your private network. For more information about techniques for handling these non-local dial plan extension numbers, See “Non-Local Dial Plan Extension Ranges” on page 32.

The user does not use a **Pool** button or pool dial-out code. Therefore, the dialed digits correspond to the non-local dial plan numbering.

NOTES:

1. UDP pool routes must be programmed before you assign digit absorption.
2. Do not use this procedure to overcome conflicts between local and remote extension numbering. Such conflicts can result in numerous problems with system features.

A maximum of 20 digits can be added, in any combination of digits 0 through 9.

Special characters such as switchhook flash, Stop, and # cannot be included as extra digits. Pause is allowed in every position except the first.

Summary: UDP Other Digits

Programmable by	System Manager
Mode	Hybrid/PBX
Idle Condition	Not required
Planning Form	Non-Local Dial Plan Administration Form in the Installation Specification
Factory Setting	0
Valid Entries	Up to 20 digits (any combination of 0 to 9)
Inspect	No
Copy Option	No
Console Procedure	Tables→UDP Routing→Dial pattern no.→Enter→ Dial route no.→Enter→Digits→**Drop**→ Dial digits to add→ Enter→Exit→Exit→Exit→Exit
PC Procedure	[F8]→[F7]→Enter pattern no.→[F10]→Type route no.→ [F10]→[F4]→[Alt]+[P]→Type digits to add→ [F10]→[F5]→ [F5]→[F5]→[F5]

Procedure: UDP Other Digits

Console/Display Instructions	Additional Information	PC
1. Select the Tables menu.		
System Programming: > Make a selection System Extensions SysRenumber Options Operator Tables LinesTrunks AuxEquip Exit NightSrvce		F8
2. Select UDP Routing.		
Tables: Make a selection AllowList ARS AllowTo UDP Routing Disallow DisallowTo Exit		F7
3. Enter the number of the pattern (*nn* = 1 to 20).		
UDP Routing Enter pattern number (1-20) Backspace Exit Enter	Dial or type [*nn*].	
4. Save your entry.		
Select Enter.		F10

Console/Display Instructions	Additional Information	PC

▶ 5. Enter the route number (*n* = 1 to 4).

```
UDP Pattern xx:
Enter route number (1-4)



Backspace
Exit            Enter
```

xx = pattern number entered in Step 3

Dial or type [*n*].

▶ 6. Save your entry.

Select Enter. F10

▶ 7. Select Digits.

```
UDP Pattern xx Route x:
Make a selection
Pool            Data
FRL
Absorb
Digits
Exit
```

xx = pattern number entered in Step 3
x = route number entered in Step 5

F4

▶ 8. Erase the current added digits, if any, or go to Step 9.

```
UDP Pattern xx Route x:
Enter other digits


nnnnnnnnnnnnnnnnnnn


Backspace       Next
Exit            Enter
```

xx = pattern number entered in Step 3
x = route number entered in Step 5

Press **Drop** or select Backspace. Alt + P F4

▶ 9. Enter up to 20 other digits (*n* = any combination of 0 to 9).

Dial or type [*n*].

Console/Display Instructions	Additional Information	PC
▶ **10. Continue to specify other digits for another route in the current pattern or go to Step 11.**		
Select Next.		F9
	Return to Step 8. The next route number is displayed on Line 1.	
▶ **11. Save your entry.**		
Select Enter.		F10
▶ **12. Return to the System Programming menu.**		
Select Exit four times.		F5 F5 F5 F5

UDP Voice and/or Data Routing

Use this procedure to route voice, data, or voice and data. For UDP routing, the voice/data specification is used in conjunction with PRI tandem trunks. See "PRI Facilities" on page 3–183 for more information. When using Fractional-T1 tandem trunks, each channel on the trunk can be used for either voice or data, but not for voice/data. See "DS1 Facilities" on page 3–105 for more information.

Voice/data routes can be associated with any UDP pattern.

Summary: UDP Voice and/or Data Routing

Programmable by	System Manager
Mode	Hybrid/PBX
Idle Condition	Not required
Planning Form	Non-Local Dial Plan Administration Form in the Installation Specification
Factory Setting	Voice/Data
Valid Entries	Voice Only, Data Only, Voice/Data
Inspect	No
Copy Option	No
Console Procedure	Tables→UDP Routing→Dial pattern no.→Enter→ Dial route no.→Enter→Data→Select capability→Enter→ Exit→Exit→ Exit→Exit
PC Procedure	F8→F7→Type pattern no.→F10→Type route no.→ F10→F6→Select capability→F10→F5→F5→F5→F5

Procedure: UDP Voice and/or Data Routing

Console/Display Instructions	Additional Information	PC
▶ **1. Select the Tables menu.**		
System Programming: > Make a selection System Extensions SysRenumber Options Operator Tables LinesTrunks AuxEquip Exit NightSrvce		F8
▶ **2. Select UDP Routing.**		
Tables: Make a selection AllowList ARS AllowTo UDP Routing Disallow DisallowTo Exit		F7
▶ **3. Enter the number of the pattern (*nn* = 1 to 20).**		
UDP Routing Enter pattern number (1-20) Backspace Exit Enter	Dial or type [*nn*].	
▶ **4. Save your entry.**		
Select Enter.		F10

Console/Display Instructions	Additional Information	PC

▶ 5. Enter the route number (*n* = 1 to 4).

```
UDP Pattern xx:
Enter route number (1-4)



Backspace
Exit            Enter
```

xx = pattern number entered in Step 3

Dial or type [*n*].

▶ 6. Save your entry.

Select Enter. F10

▶ 7. Select Data.

```
UDP Pattern xx Route x:
Make a selection
Pool            Data
FRL
Absorb
Digits
Exit
```

xx = pattern number entered in Step 3
x = route number entered in Step 5

F6

▶ 8. Select the appropriate capability.

```
UDP Pattern xx Route x:
Select capability
Voice Only
Data Only
Voice/Data
                Next
Exit            Enter
```

xx = table number entered in Step 5
x = route number entered in Step 5

Select Voice Only, F1
Data Only, or F2
Voice/Data. F3

▶ 9. Continue to specify other entries for another route or go to Step 10.

Select Next. F9

Return to Step 8. The next route number is displayed on Line 1.

▶ 10. Save your entry.

Select Enter. F10

▶ 11. Return to the System Programming menu.

Select Exit four times. F5 F5 F5 F5

Night Service

The procedures in this section cover how to program the following optional Night Service features:

- Night Service Group Assignment
- Night Service with Outward Restriction
- Night Service with Time Set
- Night Service with Coverage Control

Night Service Group Assignment

Use this procedure to assign extensions and calling groups to a Night Service group for coverage after hours.

A maximum of eight Night Service groups can be assigned (no more than one for each operator position assigned). Any number of extensions can be assigned to a Night Service group, and an extension can belong to more than one group.

A calling group can also be assigned to a Night Service group. This applies only to Release 2.0 or later.

Beginning with Release 4.1 this option allows the system manager to assign outside lines to Night Service groups in addition to extensions and calling groups for coverage after hours.

Any number of outside lines can be assigned to a Night Service group. Each outside line can belong to more than one group.

Summary: Night Service Group Assignment

Programmable by	System Manager
Mode	All
Idle Condition	Not required
Planning Form	Form 9a, Night Service: Group Assignment
Factory Setting	Not applicable
Valid Entries	Not applicable
Inspect	Yes (extensions only)
Copy Option	No
Console Procedure	To assign a calling group to a Night Service group: NightSrvce→GroupAssign→Calling Group→Dial ext. no. of Night Service attendant→Enter→Dial calling group no.→Enter→Exit→Exit

To assign an extension to a Night Service group:
NightSrvce→GroupAssign→Extensions→Dial ext. no. of Night Service attendant→Enter→Dial no. of extension→Enter→Exit→Exit

To assign an outside line to a Night Service group:
NightSrvce→GroupAssign→Lines→Dial ext. no. of Night Service attendant→Enter→Dial outside line number (801-880)→Enter→Exit→Exit

PC Procedure

To assign a calling group to a Night Service group:
[F10]→[F1]→[F2]→Type ext. no. of Night Service attendant→[F10]→Type calling group no.→[F10]→[F5]→[F5]

To assign an extension to a Night Service group:
[F10]→[F1]→[F1]→Type ext. no. of Night Service attendant→[F10]→Type no. of extension→[F10]→[F5]→[F5]

To assign an outside line to a Night Service group:
[F10]→[F1]→[F3]→Type ext. no. of Night Service attendant→[F10]→Type outside line number (801–880)→[F10]→[F5]→[F5]

Procedure: Night Service Group Assignment

Console Display/Instructions	Additional Information	PC
1. Select the Night Service menu.		
System Programming: >		
Make a selection		
System Extensions		
SysRenumber Options		
Operator Tables		
LinesTrunks AuxEquip		
Exit NightSrvce		F10
2. Select Group Assignment.		
Night Service:		
Make a selection		
GroupAssign Start		
OutRestrict Stop		
Emergency Time Control		
ExcludeList Cover Control		
Exit		F1

Console/Display Instructions	Additional Information	PC
▶ **3. Select an option.**		
Night Serv Group Assign: Make a selection Extensions Calling Grp Lines Exit	Select Extensions to add an extension to a Night Service group.	F1
	Select Calling Grp to add a calling group to a Night Service group.	F2
	Select Lines to add outside lines to a Night Service group.	F3
▶ **4. Enter the operator number.**		
Night Serv Group Assign: Enter NS Attendnt number Backspace Exit Enter	Dial or type [*nnnn*].	
▶ **5. Save your entry.**	● ◆	
Select Enter.		F10
	If you selected Extensions in Step 3, go to ● Extensions Procedure. If you selected Calling Grp in Step 3, go to ◆ Calling Group Procedure.	

● Extensions Procedure

Console/Display Instructions	Additional Information	PC

▶ 1. Specify the extension you want to assign to the Night Service group.

```
Night Serv Group xxxx:
Enter extension

                Delete
Backspace       Next
Exit            Enter
```

xxxx = number entered in Step 4

If no DSS is attached:
SP: “Entering an Extension”

If DSS is attached:
Toggle the red LED on or off as required. Then, go to Step 3.
On = extension assigned to group
Off = extension not assigned to group

▶ 2. Assign or remove the extension(s) from the Night Service group.

```
Night Serv Group xxxx:
Enter extension
xxx

                Delete
Backspace       Next
Exit            Enter
```

xxxx = number entered in Step 4

Select Enter to assign or [F10]
Delete to remove your entry and [F8]
continue adding or removing extensions from the Night Service group by repeating Steps 1 and 2.
Select Next to save your entry and [F9] begin assigning extensions to the *next* Night Service group (operator position).

▶ 3. Return to the System Programming menu.

Select Exit twice. [F5] [F5]

◆ Calling Group Procedure.

Console Display/Instructions	Additional Information	PC

▶ 1. Enter the extension of the calling group to be added.

```
Night Serv Group xxxx:
Enter group call ext

                Delete
Backspace       Next
Exit            Enter
```

xxxx = number entered in Step 4

Dial or type [*nnnn*].

Console/Display Instructions **Additional Information** **PC**

▶ 2. Assign or remove the calling group(s) from the Night Service group.

```
Night Serv Group xxxx:
Enter group call ext
xxx

                Delete
Backspace       Next
Exit            Enter
```

xxxx = number entered in Step 4

Select Enter to assign or Delete to remove your entry and continue adding or removing calling groups from the Night Service group by repeating Steps 1 and 2. F10 F8

Select Next to save your entry and begin assigning calling groups to the *next* Night Service group (operator position).

▶ 3. Return to the System Programming menu.

Select Exit twice. F5 F5

Night Service with Outward Restriction

Use this procedure to prevent unauthorized use of telephones after hours. This feature requires the user to enter a password to make a call when Night Service is activated, unless one of the lists below applies. It also requires an operator to enter a password in order to activate Night Service manually.

To remove the password requirement follow the procedure below and delete the current password (press the **Drop** button).

This procedure is also used to establish the following lists:

- **Emergency Allowed List.** A list of telephone numbers that can be dialed without a password.
- **Exclusion List.** A list of extensions that are exempt from password requirements.

A maximum of 10 telephone numbers can be included on the Emergency Allowed List, each number with a maximum of 12 digits.

Extensions included in the Exclusion List keep normal call restrictions (if any are assigned); however, they are not protected in any other way from unauthorized use after hours.

Summary: Night Service with Outward Restriction

Programmable by	System Manager
Mode	All
Idle Condition	Not required
Planning Form	Form 9b, Night Service: Outward Restrictions
Factory Setting	No password
Valid Entries	Four digits (any combination of 0 to 9)
Inspect	Yes (Exclusion List)
Copy Option	No
Console Procedure	NightSrvce→OutRestrict→**Drop**→Dial password→ Enter→Emergency→Dial item no.→Enter→**Drop**→ Dial telephone no.→Enter→ExcludeList→ Dial ext. no.→Enter→Exit→Exit
PC Procedure	F10→F2→Alt + P→Type password→F10→F3→ Type item no.→F10→Alt + P→Type telephone no.→ F10→F4→Type ext. no.→F10→F5→F5

Procedure: Night Service with Outward Restriction

Console Display/Instructions	Additional Information	PC
▶ **1. Select the Night Service menu.**		
System Programming: > Make a selection System Extensions SysRenumber Options Operator Tables LinesTrunks AuxEquip Exit NightSrvce		F10
▶ **2. Select Outward Restriction.**		
Night Service: Make a selection GroupAssign Start OutRestrict Stop Emergency Time Control ExcludeList Cover Control Exit		F2

Console/Display Instructions **Additional Information** **PC**

▶ **3. Erase the current password (*xxxx*) if assigned.**

```
Night Serv OutRestrict:
Enter 4-digit password

xxxx

Backspace
Exit            Enter
```

Press **Drop**. Alt + P

▶ **4. Enter a four-digit password (*n* = any combination of 0 to 9).**

```
Night Serv OutRestrict:
Enter 4-digit password



Backspace
Exit            Enter
```

To remove the password requirement, leave the screen blank and go to Step 5.

Dial or type [*nnnn*].

▶ **5. Save your entry.**

Select Enter. F10

If you removed the password requirement, you have completed this procedure.

▶ **6. Select Emergency Allowed List.**

```
Night Service:
Make a selection
GroupAssign     Start
OutRestrict     Stop
Emergency       Time Control
Exclude List    Cover Control
Exit
```

If you do not wish to enter an Emergency Allowed List, skip this step and go to Step 13.

F3

▶ **7. Enter the item number you want to add or change (*n* = 0 to 9).**

```
Night Serv Emergency:
Enter item number (0-9)



Backspace
Exit            Enter
```

Dial or type [*n*].

Console/Display Instructions	Additional Information	PC
▶ **8. Save your entry.**		
Select Enter.		F10
▶ **9. Erase the current telephone number (*n*) if assigned.**		
Night Serv Emergency *x*: Enter telephone number *n* Backspace Next Exit Enter	*x* = list item number entered in Step 7	
	Press **Drop**.	Alt + P
▶ **10. Enter the telephone number (up to 12 digits).**		
Dial or type [*n*].		⇐
▶ **11. Continue to assign a telephone number to the next emergency list item or go to Step 12.**		
Select Next.		F9
	Return to Step 9. The next emergency list item number displays on Line 1.	
▶ **12. Save your entry.**		
Select Enter.		F10
▶ **13. Select Exclusion List.**		
Night Service: Make a selection GroupAssign Start OutRestrict Stop Emergency Time Control ExcludeList Cover Control Exit		F4

Console/Display Instructions **Additional Information** **PC**

▶ 14. Specify the extension.

```
Night Serv Exclusion:
Enter extensions
excluded

                Delete
Backspace
Exit            Enter
```

If no DSS is attached:
SP: "Entering an Extension"

If DSS is attached:
Toggle the red LED on or
off as required. Then, go to Step 16.
On = extension is excluded from list
Off = extension is not excluded from list

▶ 15. Assign or remove the extension(s) from the exclusion list.

Select Enter or F10
Delete. F8

Continue to add or delete extensions by repeating Steps 14 and 15.

▶ 16. Return to the System Programming menu.

Select Exit twice. F5 F5

Night Service with Time Set

Use this procedure to specify the time of day and the days of the week when Night Service is to be activated and deactivated.

Enter the time of day as four digits, using 24-hour notation. Enter the day of the week as a single digit (0 to 6), with 0 being Sunday. If you enter an invalid number, the system truncates the number.

If you change the system time while Night Service is active, Night Service is deactivated automatically and you must manually reactivate it.

Operators can override the timer and turn Night Service on and off manually. This feature can be deactivated when out-of-the-ordinary situations occur (for example, a midweek holiday).

NOTE:
For Release 2.1 and earlier, after setting Start and Stop time for Night Service you must use the following procedure to set the current day of the week for Night Service.

NightSrvce→Day of Week→Dial the current day of the week→Enter→Exit

If system programming information is being loaded into memory from a backup diskette, the current day of the week must be reset.

Night Service can be turned off by using the following procedure:

NightSrvce→Day of Week→Dial 9→Enter→Exit

Summary: Night Service with Time Set

Programmable by	System Manager
Mode	All
Idle Condition	Not required
Planning Form	Form 9c, Night Service: Time Set
Factory Setting	Not applicable
Valid Entries	Day: 0 to 6; Time: 0000 to 2359
Inspect	No
Copy Option	No
Console Procedure	To add or change start/stop time: NightSrvce→Start→**Drop**→Dial start day and time→ Enter→Stop→**Drop**→Dial stop day and time→ Enter→Exit To activate/deactivate: NightSrvce→Time Control→Off or On→Enter→Exit
PC Procedure	To add or change start/stop time: [F10]→[F6]→[Alt] + [P]→Type start day and time→ [F10]→ [F7]→[Alt] + [P]→Type stop day and time→[F10]→[F5] To activate/deactivate: [F10]→[F8]→[F1] or [F2]→[F10]→[F5]

Procedure: Night Service with Time Set

Console Display/Instructions	Additional Information	PC

▶ **1. Select the Night Service menu.**

```
System Programming:      >
Make a selection
System          Extensions
SysRenumber     Options
Operator        Tables
LinesTrunks     AuxEquip
Exit            NightSrvce
```

F10

▶ **2. Select Night Service option.** ● ◆ ■

```
Night Service:
Make a selection
GroupAssign     Start
OutRestrict     Stop
Emergency       Time Control
ExcludeList     Cover Control
Exit
```

To add or change start time, select Start and go to ● Add or Change Start Time Procedure. F6

To add or change stop time, select Stop and go to ◆ Add or Change Stop Time Procedure. F7

To Activate/deactivate Night Service with Time Control, select Time Control and go to ■ Activate/Deactivate Night Service Procedure. F8

● Add or Change Start Time Procedure

Console/Display Instructions	Additional Information	PC

▶ **1. Erase the current start day and time (*xxxxx*) if assigned.**

```
Night Serv Start:
Enter day(0-6), hr(00-23)
and min(00-59)
xxxxx

Backspace
Exit            Enter
```

Press **Drop.** Alt + P

▶ **2. Enter a one-digit day of the week (Sunday = *0, Monday = 1,* and so on), followed by a four-digit time of day (*hh* = 00 to 23, *mm* = 00 to 59).**

Dial or type [*dhhmm*].

Console/Display Instructions	Additional Information	PC
▶ **3. Save your entry.**		
Select Enter.		F10
▶ **4. Return to the System Programming menu.**		
Select Exit.		F5

◆ **Add or Change Stop Time Procedure**

Console Display/Instructions	Additional Information	PC
▶ **1. Erase the current stop day and time (*xxxxx*) if assigned.**		
Night Serv Stop: Enter day(0-6),hr(00-23) and min(00-59) *xxxxx* Backspace Exit Enter	Press **Drop**.	Alt + P
▶ **2. Enter a one-digit day of the week (*Sunday = 0, Monday = 1, and so on*), followed by a four-digit time of day (*hh* = 00 to 23, *mm* = 00 to 59).**		
Dial or type [*dhhmm*].		⇦
▶ **3. Save your entry.**		
Select Enter.		F10
▶ **4. Return to the System Programming menu.**		
Select Exit.		F5

■ Activate/Deactivate Night Service Procedure

Console/Display Instructions	Additional Information	PC
▶ **1. Turn Night Service On or Off.**		
Night Serv Time Control: Select one On Off Exit Enter	Select On to turn Night Service on. Select Off to turn Night Service off.	F1 F2
▶ **2. Save your entry.**		
Select Enter.		F10
▶ **3. Return to the System Programming menu.**		
Select Exit.		F5

Night Service with Coverage Control

Use this procedure to enable or disable the Night Service Coverage Control option to automatically control the status of programmed **Coverage VMS Off** buttons.

When the Coverage Control option is enabled, a transition into Night Service (either by pressing a **Night Service** button or automatically by the Time Set option) automatically deactivates the **VMS Coverage Off** (Release 2.0 or later) buttons (LED is off) and allows outside calls to go to VMS Coverage at night. When the system is taken out of Night Service (either by pressing a **Night Service** button or automatically by the Time Set option), programmed VMS Coverage Off buttons are activated (LED is on) and outside calls are prevented from going to VMS Coverage during the day.

When the Coverage Control option is disabled, Night Service status has no effect on programmed **VMS Coverage Off** buttons.

Summary: Night Service with Coverage Control

Programmable by	System Manager
Mode	All
Idle Condition	Not required
Planning Form	Form 9c, Night Service: Options
Factory Setting	Disabled

Valid Entries	Enable or Disable
Inspect	No
Copy Option	No
Console Procedure	NightSrvce→CoverContrl→Enable or Disable→Enter→Exit
PC Procedure	F10 → F9 → F1 or F2 → F10 → F5

Procedure: Night Service with Coverage Control

Console Display/Instructions	Additional Information	PC

1. Select the Night Service menu.

```
System Programming:      >
Make a selection
System          Extensions
SysRenumber     Options
Operator        Tables
LinesTrunks     AuxEquip
Exit            NightSrvce
```

F10

2. Select Night Service Cover Control option.

```
Night Service:
Make a selection
GroupAssign     Start
OutRestrict     Stop
Emergency       Time Control
ExcludeList     Cover Control
Exit
```

F9

3. Enable or disable Cover Control.

```
NightServ Cover Control
Select one
Enable
Disable


Exit            Enter
```

Select Enable to Enable cover control F1
Select Disable to Disable cover control. F2

4. Return to the System Programming menu.

Select Exit. F5 F5

Labeling

The procedures in this section cover how to add or change labels for the following:

- Extension Directory
- Lines or Trunks
- Posted Message
- Group Calling
- System Speed Dial Directory

Programming on the system programming console:

Use the buttons next to the display to specify the letters A through I and punctuation. Use the line/feature buttons to specify additional alphanumeric characters for labels. Use the template provided with the MLX-20L telephone to see which line buttons correspond to which alphanumeric characters.

Programming with SPM:

Use the PC keyboard for labels. All letters appear on the screen in uppercase.

NOTE:
See the *MLX-20L User's Guide* for instructions on creating or editing a personal directory.

Extension Directory

Use this procedure to establish alphanumeric system labels for display telephone users to identify the person calling or leaving a message. This procedure is also used to program the Extension Directory feature for MLX telephones.

NOTE:
In Release 6.0 and later systems (Hybrid/PBX mode only) where private networked systems are connected by PRI tandem trunks, programmed labels for extensions on the remote system may be displayed at a call recipient's MLX display telephone on a local system. If other types of trunks connect the private network systems, the call display is the same as for an outside call. For additional information about controlling the display for such incoming calls, see "Display Preference" on page 3–356.

A label can have a maximum of seven characters.

Summary: Extension Directory

Programmable by	System Manager
Mode	All
Idle Condition	Not required
Planning Form	Form 2a, System Numbering: Extension Jacks
Factory Setting	Not applicable
Valid Entries	Not applicable
Inspect	No
Copy Option	No
Console Procedure	**More**→Labeling→Directory→Extension→ Dial ext. no.→Enter→**Drop**→Enter label→Enter→ Exit→Exit→Exit
PC Procedure	PgUp→F1→F1→F2→Type ext. no.→F10→Alt + P→ Type label→F6→F5→F5→F5

Procedure: Extension Directory

Console Display/Instructions	Additional Information	PC
▶ **1. Go to the second screen of the System Programming menu.**		
System Programming: > Make a selection System Extensions SysRenumber Options Operator Tables LinesTrunks AuxEquip Exit NightSrvce	Press **More**.	PgUp
▶ **2. Select the Labeling menu.**		
System Programming: Make a selection Labeling Language Data Print Cntr-Prg Exit		F1

Console/Display Instructions **Additional Information** **PC**

▶ 3. Select Directory.

```
Labeling
Make a selection
Directory
LinesTrunks
PostMessage
Grp Calling
Exit
```

F1

▶ 4. Select Extension.

```
Directory:
Make a selection
System
Extension
Personal

Exit
```

F2

▶ 5. Specify the extension you want to label.

```
Extension Directory
Enter extension



Backspace
Exit            Enter
```

▶ 6. Save your entry.

Select Enter. F10

▶ 7. Erase the current label (*AAAAAAA*) if assigned.

```
Ext xxxx:Enter new name
AAAAAAA
Punctuation     Enter
Backspace       Exit
A    '          ,        B
C    -          &        D
E    .          Space    F
```

xxxx = number entered in Step 5

Press **Drop**. Alt + P

Console/Display Instructions	Additional Information	PC
▶ **8. Enter a label for the extension.**		
	Use Punctuation to toggle between letters and punctuation.	
Dial or type the label.		
▶ **9. Save your entry.**		
Select Enter.		F6
NOTE: F6, not F10.		
	Continue to label additional extensions by repeating Steps 5 through 9.	
▶ **10. Return to the System Programming menu.**		
Select Exit three times.		F5 F5 F5

Lines or Trunks

Use this procedure to establish alphanumeric system labels for display telephone users to identify the line or trunk being used.

Summary: Lines or Trunks

Programmable by	System Manager
Mode	All
Idle Condition	Not required
Planning Form	Form 2c, System Numbering: Line/Trunk Jacks
Factory Setting	Not applicable
Valid Entries	Not applicable
Inspect	No
Copy Option	No
Console Procedure	**More**→Labeling→LinesTrunks→Dial line/trunk no.→Enter→**Drop**→Dial label→Enter→Exit→Exit
PC Procedure	PgUp→F1→F2→Type line/trunk no.→F10→Alt + P→Type label→F6→F5→F5

Procedure: Lines or Trunks

Console Display/Instructions	Additional Information	PC
1. Go to the second screen of the System Programming menu.		
System Programming: > Make a selection System Extensions SysRenumber Options Operator Tables LinesTrunks AuxEquip Exit NightSrvce	Press **More**.	PgUp
2. Select the Labeling menu.		
System Programming: Make a selection Labeling Language Data Print Cntr-Prg Exit		F1
3. Select Lines/Trunks.		
Labeling Make a selection Directory LinesTrunks PostMessage Grp Calling Exit		F2
4. Enter the line or trunk number.		
Label Lines/Trunks: Enter the line/trunk number Backspace Exit Enter	Dial or type: Trunk number [*nnn*] Slot and port number **[sspp]* Logical ID number *#[nnn]*	↵
5. Save your entry.		
Select Enter.		F10

Console/Display Instructions	Additional Information	PC

▶ 6. Erase the current label (*AAAAAAA*) if assigned.

```
L xxx Enter new label
AAAAAAA
Punctuation     Enter
Backspace       Exit
A   '           ,        B
C   -           &        D
E   .           Space    F
```

xxx = number entered in Step 4

Press **Drop**. Alt + P

▶ 7. Enter a label for the line or trunk.

Use Punctuation to toggle between letters and punctuation.

Dial or type the label.

▶ 8. Save your entry.

Select Enter. F6

NOTE:
F6, not F10.

Continue to label additional lines/trunks by repeating Steps 4 through 8.

▶ 9. Return to the System Programming menu.

Select Exit twice. F5 F5

Posted Message

Use this procedure to add or change existing posted messages. The posted messages allow callers with display telephones to know why the called extension does not answer.

Each posted message can have a maximum of 16 characters. Messages 2 through 20 can be changed through programming. Message 1, Do Not Disturb, cannot be changed.

NOTE:
In Release 6.0 and later systems, posted messages are not supported across private network systems.

Summary: Posted Messages

Programmable by	System Manager
Mode	All
Idle Condition	Not required
Planning Form	Form 8a, Label Form: Posted Message
Factory Setting	First 10 messages
Valid Entries	1 to 20
Inspect	No
Copy Option	No
Console Procedure	**More**→Labeling→PostMessage→Dial message no.→ Enter→**Drop**→Enter message→Enter→Exit→Exit
PC Procedure	PgUp→F1→F3→Type message no.→F10→Alt + P→ Type message→F6→F5→F5

Procedure: Posted Messages

Console Display/Instructions	Additional Information	PC
▶ **1. Go to the second screen of the System Programming menu.**		
System Programming: > Make a selection System Extensions SysRenumber Options Operator Tables LinesTrunks AuxEquip Exit NightSrvce	Press **More.**	PgUp
▶ **2. Select the Labeling menu.**		
System Programming: Make a selection Labeling Language Data Print Cntr-Prg Exit		F1

Console/Display Instructions **Additional Information** **PC**

▶ 3. Select Posted Message.

```
Labeling
Make a selection
Directory
LinesTrunks
PostMessage
Grp Calling
Exit
```

F3

▶ 4. Enter the posted message number (*nn* = 1 to 20).

```
Posted Message:
Enter the message number
(01-20)


Backspace
Exit            Enter
```

Dial or type [*nn*].

▶ 5. Save your entry.

Select Enter.

F10

▶ 6. Erase the current message (*AAAAAAA*) if assigned.

```
Msg xx:Enter new message
AAAAAAA
Punctuation     Enter
Backspace       Exit
A    '          ,         B
C    -          &         D
E    .          Space     F
```

xx = number entered in Step 4

Press **Drop.**

Alt + P

▶ 7. Enter the new message.

Use Punctuation to toggle between letters and punctuation.

Dial or type the message.

Console/Display Instructions	Additional Information	PC
▶ **8. Save your entry.**		
Select Enter.		F6
NOTE: F6, not F10.		
	Change additional messages by repeating Steps 4 through 8.	
▶ **9. Return to the System Programming menu.**		
Select Exit twice.		F5 F5

Group Calling

Use this procedure to establish alphanumeric system labels for display telephone users to identify calling groups.

A label can have a maximum of seven characters.

Summary: Group Calling

Programmable by	System Manager
Mode	All
Idle Condition	Not required
Planning Form	Form 6e, Group Calling
Factory Setting	Not applicable
Valid Entries	Not applicable
Inspect	No
Copy Option	No
Console Procedure	**More**→Labeling→Grp Calling→Dial calling group ext. no.→Enter→**Drop**→Enter label→Enter→Exit→Exit
PC Procedure	PgUp→F1→F4→Type calling group ext. no.→F10→Alt + P→Type label→F6→F5→F5

Procedure: Group Calling

Console Display/Instructions	Additional Information	PC
▶ **1. Go to the second screen of the System Programming menu.**		
System Programming: > Make a selection System Extensions SysRenumber Options Operator Tables LinesTrunks AuxEquip Exit NightSrvce	Press **More**.	PgUp
▶ **2. Select the Labeling menu.**		
System Programming: Make a selection Labeling Language Data Print Cntr-Prg Exit		F1
▶ **3. Select Group Calling.**		
Labeling Make a selection Directory LinesTrunks PostMessage Grp Calling Exit		F4
▶ **4. Enter the calling group extension number (*nnnn*).**		
Group Calling: Enter extension number of group Backspace Exit Enter	Dial or type [*nnnn*].	
▶ **5. Save your entry.**		
Select Enter.		F10

Console/Display Instructions	Additional Information	PC

▶ 6. Erase the current label (*AAAAAAA*) if assigned.

```
GrpCl xxxx:Enter new label
AAAAAAA
Punctuation     Enter
Backspace       Exit
A    '          ,        B
C    -          &        D
E    .          Space    F
```

xxxx = number entered in Step 4

Press **Drop**. Alt + P

▶ 7. Enter a label for the calling group.

Use Punctuation to toggle between letters and punctuation.

Dial or type the label.

▶ 8. Save your entry.

Select Enter. F6

NOTE:
F6, not F10.

Continue to label additional calling groups by repeating Steps 4 through 8.

▶ 9. Return to the System Programming menu.

Select Exit twice. F5 F5

System Speed Dial Directory

Use this procedure to establish System Speed Dial numbers for all system users. You can also use this procedure to enter the alphanumeric labels shown on display telephones (for the System Directory feature of the MLX telephone).

A total of 130 numbers (System Speed Dial plus System Directory) can be entered, with a maximum of 11 characters per label.

Speed dial code assignments are 600 through 729.

Summary: System Speed Dial Directory

Programmable by	System Manager
Mode	All
Idle Condition	Not required
Planning Form	Form 8b, System Speed Dial
Factory Setting	Not applicable
Valid Entries	600 to 729
Inspect	No
Copy Option	No
Console Procedure	**More**→Labeling→Directory→System→Dial dial code no.→Enter→**Drop**→Enter label Enter→Backspace→ Dial telephone no.→Enter→Yes or No→Enter→ Exit→Exit→Exit
PC Procedure	[PgUp]→[F1]→[F1]→[F1]→Type dial code no.→[F10]→ [Alt] + [P]→Type label→[F6]→[F2]→Type telephone no.→ [F6]→[F1] or [F2]→[F6]→[F5]→[F5]→[F5]

Procedure: System Speed Dial Directory

Console Display/Instructions	Additional Information	PC
▶ **1. Go to the second screen of the System Programming menu.**		
System Programming: > Make a selection System Extensions SysRenumber Options Operator Tables LinesTrunks AuxEquip Exit NightSrvce	Press **More**.	[PgUp]

Console/Display Instructions	Additional Information	PC

▶ 2. Select the Labeling menu.

```
System Programming:
Make a selection
Labeling        Language
Data
Print
Cntr-Prg
Exit
```

F1

▶ 3. Select Directory.

```
Labeling
Make a selection
Directory
LinesTrunks
PostMessage
Grp Calling
Exit
```

F1

▶ 4. Select System.

```
Directory:
Make a selection
System
Extension
Personal

Exit
```

F1

▶ 5. Enter the speed dial code number you want to add or change (*nnn* = 600 to 729).

```
System Directory:
Enter the entry number
(600-729)



Backspace
Exit            Enter
```

Dial or type [*nnn*].

▶ 6. Save your entry.

Select Enter.

F10

Console/Display Instructions	Additional Information	PC

▶ 7. Erase the current label (*AAAAAAA*) if assigned.

```
Entry xxx:Enter new name
AAAAAAA
Punctuation      Enter
Backspace        Exit
A    '           ,          B
C    -           &          D
E    .           Space      F
```

xxx = code entered in Step 4

Press **Drop**. Alt + P

▶ 8. Enter a label for the speed dial code.

Use Punctuation to toggle between letters and punctuation.

Dial or type the label.

▶ 9. Save your entry.

Select Enter. F6

NOTE:
F6, not F10.

▶ 10. Erase the currently assigned telephone number (*x*).

```
Enter Tel. No., and Enter
x
Punctuation      Enter
Backspace        Exit
A    '           ,          B
C    -           &          D
E    .           Space      F
```

Note: Do *not* press Drop.

Press Backspace. F2

Console/Display Instructions **Additional Information** **PC**

▶ **11. Enter a telephone number for the speed dial code entered in Step 5 (*n* = up to 20 digits).**

Include any special characters shown on the planning form:
- **Hold (A+H) = Pause**
- **Drop (A+P) = Stop**
- **Conference (A+F) = switchhook flash**

Dial or type [*n*].

▶ **12. Save your entry.**

Select Enter. F6

NOTE:
F6, not F10.

▶ **13. Select a display option.**

```
Displ no. while dialing?

Yes          Enter
No           Exit
```

If you want the dialed telephone number to display when using the System Directory feature, select Yes. F1

If you do not want the dialed telephone number to display when using the System Directory feature, select No. F2

▶ **14. Save your entry.**

Select Enter. F6

NOTE:
F6, not F10.

Continue to assign additional Speed Dial numbers by repeating Steps 4 through 14.

▶ **15. Return to the System Programming menu.**

Select Exit three times. F5 F5 F5

Print Reports

Use the procedures in this section to change the language for system reports and to print the system reports.

Report Language

Use this procedure to change the language of the system reports. It applies to Release 1.1 and higher. Unless you change the report language, reports are printed in the language chosen as the system language.

Summary: Report Language

Programmable by	System Manager
Mode	All
Idle Condition	Not required
Planning Form	Form 1, System Planning
Factory Setting	English
Valid Entries	English, French, Spanish
Inspect	No
Copy Option	No
Console Procedure	**More**→Language→Printer→English or French or Spanish→Enter→Exit
PC Procedure	PgUp→F6→F4→F1 or F2 or F3→F10→F5

Procedure: Report Language

Console/Display Instructions	Additional Information	PC
▶ **1. Go to the second screen of the System Programming menu.**		
System Programming: > Make a selection System Extensions SysRenumber Options Operator Tables LinesTrunks AuxEquip Exit NightSrvce	Press **More.**	PgUp

Console/Display Instructions **Additional Information** **PC**

▶ 2. Select Language.

```
System Programming:
Make a selection
Labeling        Language
Data
Print
Cntr-Prg
Exit
```

F6

▶ 3. Select Printer.

```
Language
Make a selection
SystemLang
Extensions
SMDR
Printer
Exit
```

F4

▶ 4. Specify a language for the reports.

```
Printer Language:
Select one
English
French
Spanish

Exit            Enter
```

Select English, F1
French, or F2
Spanish. F3

▶ 5. Save your entry.

Select Enter. F10

▶ 6. Return to the System Programming menu.

Select Exit. F5

Printing System Reports

The communications system can be used to print a variety of reports. You can print individual reports or use the `All` option to print the entire set of available reports, including all report sections and options. See Appendix F for samples of the print reports.

Use this procedure to print the reports listed below. With the exception of Trunk Information, the dash lists under the bullets show the sections of each report that automatically print when the report option is selected.

- All
  - Each report
  - All report options
- System Set Up
- System Dial Plan
  - Pools
  - Telephone Paging Zones
  - Direct Group Calling
  - Lines/Trunks
  - Stations (Extensions)
- Label Information
  - Telephone Personal Directory
  - Message Numbers and Posted Messages
- Trunk Information*
  - TIE
  - DID
  - Loop/Ground
  - General
  - Switched 56 Data
- T1 Information
- PRI Information
- Remote Access
  - General Options
  - Non-TIE Restrictions
  - TIE Restrictions
  - Barrier Code Restrictions

* Trunk option must be specified

- Operator Information
  - Position
  - General Options
  - DSS Options
  - QCC Operators
  - Operator Information
- Allowed Lists
- Allowed Lists Assigned to Extensions
- Disallowed Lists
- Disallowed Lists Assigned to Extensions
- Automatic Route Selection
- Tables
- Extension Directory
- System Directory
- Group Page
- Extension Information
- Group Coverage
- Group Calling
- Night Service
- Call Pickup Groups
- Error Logs
- Authorization Codes
- BRI Information Report
- Non-Local Dial Plan
- Service Observing Groups

NOTE:
If you select the `All` option, keep in mind that the reports take several minutes to print. You may want to schedule use of the printer during off-peak hours.

If you select a report for which there is no information, the report header still prints.

Print reports if you cannot back up your system programming information.

Do not print reports if your system must handle more than 100 calls per hour.

If you are printing from the console, your printer must be connected to the SMDR port. If you are programming on a PC with SPM, you have the following choices:

- Print reports on the SMDR printer (if available)
- Print reports on the PC printer
- Save reports (on hard disk or floppy)
- View reports (browse)

See Chapter 2, “Programming With SPM,” for details.

Summary: Printing System Reports

Programmable by	System Manager
Mode	All
Idle Condition	Not required
Planning Form	Not applicable
Factory Setting	Not applicable
Valid Entries	Any saved report
Inspect	No
Copy Option	No
Console Procedure	To print trunk information: **More**→`Print`→`Trunk Info`→Select trunk type→`Exit` To print extension information: **More**→`Print`→**More**→`Ext Info`→Dial extension no.→`Enter`→`Exit` To print all other reports: **More**→`Print`→Select report→`Exit`
PC Procedure	To print trunk information: [PgUp]→[F3]→[F6]→Select trunk type→[F5] To print extension information: [PgUp]→[F3]→[PgUp]→[F10]→Type extension no.→[F10]→[F5] To print all other reports: [PgUp]→[F3]→Select report→[F5] To save report on disk: [PgUp]→[F3]→Select report→[F10]→ Select `GOTO FLOPPY`→[F10] To view report: [Ctrl] + [F8]

Procedure: Printing System Reports

Console Display/Instructions	Additional Information	PC

▶ 1. Go to the second screen of the System Programming menu.

```
System Programming:      >
Make a selection
System          Extensions
SysRenumber     Options
Operator        Tables
LinesTrunks     AuxEquip
Exit            NightSrvce
```

Press **More**. PgUp

▶ 2. Select Print.

```
System Programming:
Make a selection
Labeling        Language
Data
Print
Cntr-Prg
Exit
```

F3

▶ 3. Select the report you want to print. ● ◆

```
Print (xxxx):            >
Make a selection
All             Trunk Info
SysSet-up       T1 Info
Dial Plan       PRI Info
Labels          RmoteAccess
Exit            Oper Info
```

xxxx = previously selected language

For additional selections press **More**. PgDn

If you select `Trunk Info` go to
● Trunk Information Procedure.

```
Print More:              >
Make a selection
AllowList       ARS
AllowListTo     Ext Direct
DisallowLst     Sys Direct
DisallowTo      Group Page
Exit            Ext Info
```

If you select `Ext Info` go to
◆ Extension Information Procedure.

```
Print More
Make a selection
GrpCoverage     Error Log
Grp Calling     Auth Code
NightServce     BRI Info
Call Pickup     NonLcl UDP
Exit            ServiceObs
```

The `All` option prints each available report and takes several minutes to complete.

Press the button or function key next to your selection.

Console/Display Instructions **Additional Information** **PC**

▶ **4. Observe the print progress screen.**

```
Print in Progress . . .

Exit
```

Press Exit (F5) to interrupt printing and display the print menu.

▶ **5. Return to the System Programming menu.**

Select Exit. F5

● **Trunk Information Procedure**

Console Display/Instructions **Additional Information** **PC**

▶ **1. Specify a trunk type.**

```
Trunk Info
Enter line/trunk type
TIE            S56 Data
DID
Loop/Ground
General
Exit
```

Press the button or function key next to your selection.

▶ **2. Return to Step 4 of the main procedure.**

◆ **Extension Information Procedure**

Console Display/Instructions **Additional Information** **PC**

▶ **1. Enter the number of the extension for which you want a report (*nnnn*).**

```
Extension Info
Enter extension number

Backspace
Exit           Enter
```

SP: “Entering an Extension”

▶ **2. Save your entry.**

Select Enter. F10

▶ **3. Return to Step 4 of the main procedure.**

Data Features

This section covers the programming procedure for analog multiline telephones connected by a General-Purpose Adapter (GPA) to a data terminal and modem.

Other data programming procedures can be found in earlier sections of this book (see Table 3–7), with the exception of ringing options. See "Ringing Options" on page 4–34 for information about ringing options.

Table 3–7. Other Data Programming Procedures

Procedure	Location
Assign Trunks or Pools to Data Workstations	"Assign Trunks or Pools to Extensions" on page 3–268
Copy Trunk Assignments	"Copy Line/Trunk Assignments" on page 3–274
Assign Intercom or System Access Buttons	"Assign Intercom or System Access Buttons" on page 3–278
Pool Dial-Out Code (Hybrid/PBX only)	"Pool Dial-Out Code" on page 3–317
Calling Restrictions	"Calling Restrictions" on page 3–320
Copy Calling Restrictions	"Copy Calling Restrictions" on page 3–322
Forced Account Code Entry	"Forced Account Code Entry" on page 3–330
Ringing Options	"Ringing Options" on page 4–34
Assign Data Hunt Group Members	"Group Calling Member Assignments" on page 3–408
Assign Data Hunt Group Trunks or Pools	"Group Calling Line/Trunk or Pool Assignments" on page 3–411
Group Type	"Group Type" on page 3–443 (choice restricted to Automatic Log In)

Analog Multiline Telephones at Data Workstations

Use this procedure to dedicate a pair of extension jacks to provide the voice and data to an analog data workstation.

The extension number associated with the first (odd-numbered) extension jack in the pair is the telephone's extension number. The extension number for the second (even-numbered) extension jack is dedicated to Data.

Calls cannot be placed to the extension jack reserved for data.

Voice Announce to Busy must be disabled at data workstations.

When you select Enter after entering the voice extension number in the data entry screen, the system automatically assigns the data extension.

Use the Inspect feature to verify extension pairs.

Summary: Analog Multiline Telephones at Data Workstations

Programmable by	System Manager
Mode	All
Idle Condition	System idle
Planning Form	Form 2a, System Numbering: Extension Jacks Form 4b, Analog Multiline Telephone Form 5a, Direct-Line Console (DLC): Analog Data Data Form 2a, Analog Data Workstation
Factory Setting	Not applicable
Valid Entries	Extension numbers of analog sets
Inspect	Yes
Copy Option	Yes
Console Procedure	**More**→Data→Voice/Data→Dial ext. no.→Enter→Exit
PC Procedure	PgUp→F2→F1→Type ext. no.→F10→F5

Procedure: Analog Multiline Telephones at Data Workstations

Console Display Instructions	Additional Information	PC
▶ **1. Go to the second screen of the System Programming menu.**		
System Programming: > Make a selection System Extensions SysRenumber Options Operator Tables LinesTrunks AuxEquip Exit NightSrvce	Press **More**.	PgUp
▶ **2. Select Data.**		
System Programming: Make a selection Labeling Language Data Print Cntr-Prg Exit		F2
▶ **3. Select Voice/Data.**		
Data: Make a selection Voice/Data		F1
▶ **4. Enter the voice (odd-numbered) extension number of the pair (*nnnn*).**		
Data Voice/Data Enter voice/data pair Delete Backspace Exit Enter	The system automatically assigns the data (even-numbered) extension. Use the Inspect feature (**Inspct** or PgDn) to view the pair. **SP:** “Entering an Extension”	

Console/Display Instructions	Additional Information	PC
▶ 5. Assign or remove the voice/data pair.		
Select Enter or Delete.		F10 F8
	You may continue to assign or remove additional voice/data pairs by repeating Steps 4 and 5.	
▶ 6. Return to the System Programming menu.		
Select Exit.		F5

2B Data

Use this procedure to program an MLX port for 2B data capability. Assigning a port for 2B data allows both B-channels of a single MLX port to be used for speeds up to 128 Kbps on data calls. 2B data capability is available on in Release 4.0 and later.

Consider the following when programming ports for 2B data capability:

- The extension number of the port cannot be the first or fifth port on an MLX module. These ports are designated as potential operator ports and cannot be used for 2B data connections.
- The extension number must correspond to the adjunct extension number of an MLX port. By default these extensions begin with “7.”
- Devices that are not intended for 2B data should not be connected to a port programmed for 2B data. These devices probably will not work.

Summary: 2B Data

Programmable by	System Manager
Mode	Key, Hybrid/PBX
Idle Condition	Required
Planning Form	Data Form 2b, Digital Data Workstation
Factory Setting	None
Valid Entries	Adjunct extension number up to four digits
Inspect	Yes
Copy Option	No
Console Procedure	Data→2B Data→Dial adjunct ext. no.→Enter→Exit→Exit
PC Procedure	F2→F2→Type adjunct ext. no.→F10→F5→F5

Procedure: 2B Data

Console Display Instructions	Additional Information	PC
▶ 1. Go to the second screen of the system programming menu.		
System Programming: > Make a selection System Extensions SysRenumber Options Operator Tables LinesTrunks AuxEquip Exit NightSrvce	Press **More**.	PgUp
▶ 2. Select Data.		
System Programming: > Make a selection Labeling Language Data Print Cntr-Prg Exit		F2
▶ 3. Select 2xB Data.		
Data: Please make a selection Voice/Data 2xB Data Exit		
▶ 4. Enter the adjunct extension number of an MLX port [*xxxx*].		
2xB Data/Video: > Enter adjunct extension number of an MLX port xxxx Delete Backspace Exit Enter	The adjunct extension number cannot correspond to the 1st or 5th port of an MLX module. Use the inspect feature (**Inspect** or PgDn) to view the 2B data pairs. Dial or type [*xxxx*].	

Console Display/Instructions	Additional Information	PC
▶ **5. Assign or remove the 2B data pair.**		
Select `Enter` or `Delete`.		F10 F8
	You may continue to assign or remove additional 2B data pairs by repeating Steps 4 and 5.	
▶ **6. Return to the System Programming menu.**		
Select `Exit` two times.		F5 F5

Memory Card

A PCMCIA (Personal Computer Memory Card International Association) interface slot is present on the processor module. The slot is a standard interface through which information can be added to or obtained from the system using a memory card. The PCMCIA interface slot accepts one memory card at a time.

This section covers the following memory card functions:

- Memory Card Formatting
- Backup
- Automatic Backup
- Restore

Card Types

The types of memory cards are described below. The card type is identified by a preprinted, color-coded label.

- **Upgrade Card.** This card is used for MERLIN LEGEND Communication System software upgrades. The upgrade can be performed by the system manager using the memory card and the `Maintenance` option on the SPM main menu. See *Maintenance and Troubleshooting* for information about this feature.

  This card is identified by an orange label with black lettering.

- **Translation Card.** The backup and restore procedures previously available to system managers through SPM (using the PC and floppy disks) can now be performed using the memory card and the new `Backup/Restore` option on the System menu. A new automatic backup feature permits you to set the system to perform automatic backups to the memory card on a daily or weekly basis. See "Backup" on page 3–629 and "Restore" on page 3–639 for more information.

  This card is identified by a white label with black lettering.

- **Forced Installation.** For use by qualified service technicians only, this card is used when the system software has been corrupted and a re-installation must be done at the customer site. The use of the card for forced installation is reserved for emergency situations in which the system software on the processor module has been damaged.

  This card is identified by an orange label with black lettering. In addition, black stripes are present on the card to distinguish it from an upgrade card.

Figure 3–4 shows a sample Translation card.

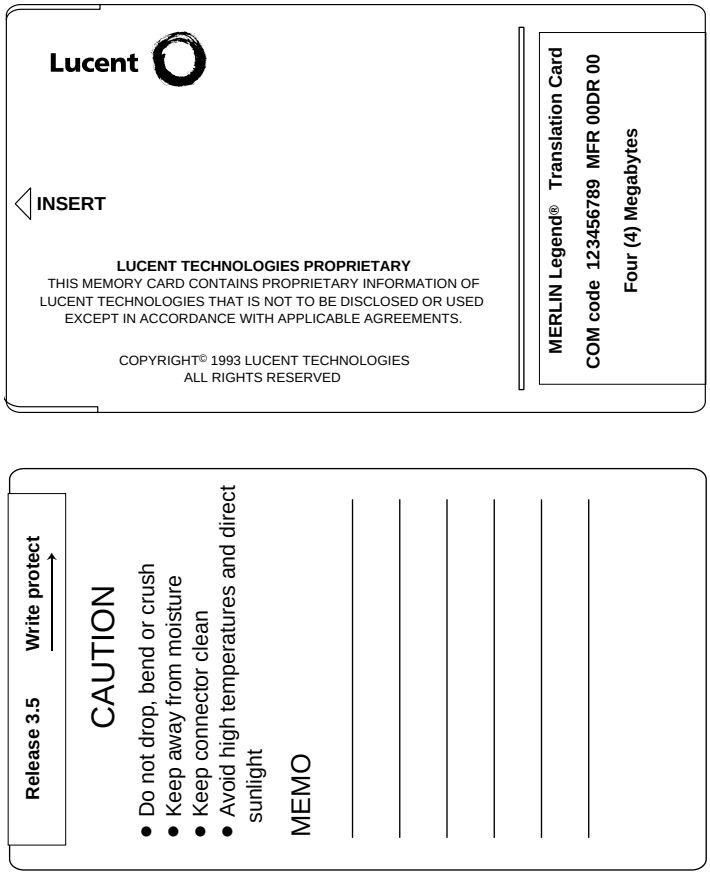

Figure 3–4. PCMCIA Memory Card

Inserting the Card

To insert the card, hold the card with the Lucent logo facing up and the arrow pointing toward the slot. See Figure 3–5 for the proper way to insert the memory card into the slot on the processor module.

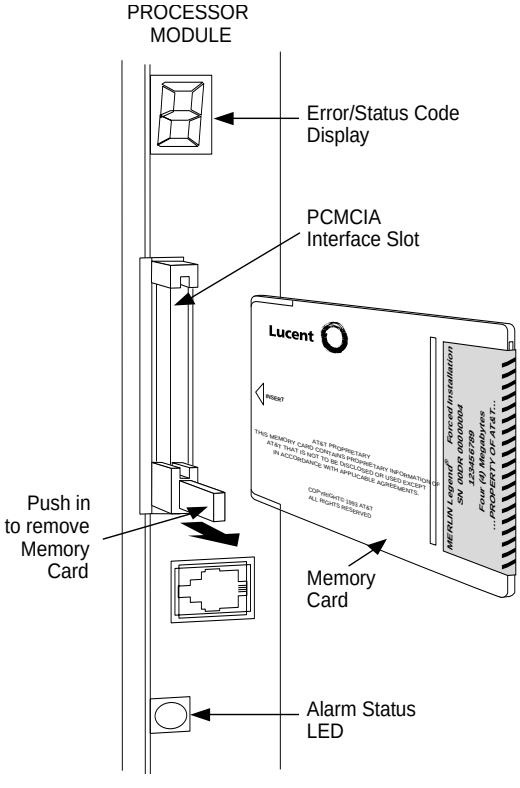

Figure 3–5. Inserting the Memory Card

Memory Card Formatting

The memory card may have to be formatted before you begin any manual or automatic backup procedures. This section details the screens and messages that appear during the format procedure.

CAUTION:
Formatting overwrites previous data on the memory card. Make certain that there is no important information on the card before you begin formatting.

Unformatted Card

```
Memory Card Backup:
Inserted Memory Card is
not the correct type.
Do you want it formatted?
Yes
No
Exit
```

If you begin a backup procedure with an unformatted or incorrectly formatted card, this screen appears.

The inserted memory card is not the correct type. You have the option of formatting the memory card as a translation memory card or repeating the backup procedure with a different memory card.

NOTES:

1. Only 4 MB Series I or Series II PCMCIA memory cards may be formatted, except those already formatted as translation cards.

2. If a memory card cannot be formatted, a message appears on screen. These messages are noted in the procedures as appropriate.

3. A memory card may need to be formatted if it is intended for use as a translation card but is currently blank or contains data other than MERLIN LEGEND Communication System backup files.

Format Warning

```
Format Memory Card:
All data on card will be
DELETED.
Do you want to continue?
Yes
No
Exit
```

This screen appears if you respond to the system prompt to format the memory card.

Select Yes (or press F3) to begin the memory card format. Table 3–8 lists the screen messages that may appear while formatting is in progress.

Table 3–8. Memory Card Formatting Messages

Message	What it Means
Formatting Memory Card	The format is in progress.
Formatting of Memory Card Completed	The format was successful and has completed.
Memory Card cannot be formatted	The memory card cannot be formatted. Remove the card and repeat the procedure with another card.
Formatting of Memory Card FAILED	The format was unsuccessful. Remove the card and repeat the procedure with another card.
Missing Card or Card Not Inserted Correctly	Verify that the card is inserted correctly and repeat the procedure.

If **Home** or **Menu** are pressed during a format procedure, the format is terminated. The data on the memory card may be lost. See Chapter 1, “Programming Basics,” for details about these keys.

Backup

Use this procedure to make a copy of your customized system data. You should create a backup at least three times during system installation (so that programmed information is not lost) and once after each system upgrade, service technician visit, or major system reconfiguration.

The Inspect feature (**Inspct** or PgDn) is available to view the attributes of the backup files on the memory card prior to initiating the backup procedure. The attributes included on the Inspect screen are the filename, the time and date of the file creation/update, the location of the system programming port, and information about the system software release from which the backup was made.

The list of backup files contains three manual backup filenames and two automatic backup filenames. The factory set names of the manual backup files are BACK1.*****, BACK2.*****, and BACK3.*****. When you select one of the backup filenames, the system automatically replaces the stars in the filename with the current month and day (*mmdd*). For example, BACK1.0116 would appear if you selected BACK1.***** and performed the backup procedure on January 16. You can rename any of the three files during the backup procedure. The automatic backup filenames are AUTO.BACK1 and AUTO.BACK2. You cannot change the names of these files.

If you enter a filename that currently exists, the message File already exists appears. You must enter another filename.

While the backup is in progress, you cannot access system programming functions, your Personal Directory, or alarm clock functions (any programmed alarms are temporarily deactivated). You may terminate the backup procedure at any point prior to receiving confirmation of a successful backup.

If any type of programming is taking place at another extension when you begin the backup procedure, the backup is canceled and the number of the first busy extension appears on the screen. Attempt the backup procedure again when the busy extension becomes idle.

If the system is turned off during a backup procedure, the backup is terminated. The system performs a System Reset (cold start), after which you may repeat the backup procedure.

If **Home** or **Menu** is pressed during a backup procedure, the backup is terminated. This may result in the deletion of an old backup file. See Chapter 1, “Programming Basics,” for details about these keys.

NOTE:
If the system performs a System Erase (frigid start), all programming is set to the factory set values. If a previous backup file is available, perform a restore. If not, the system must be reprogrammed. See “Restore” on page 3–639 for information about the system restore procedure. Also see “Backup Messages” on page 3–637 for information about errors that may occur during the backup procedure.

Summary: Backup

Programmable by	System Manager
Mode	All
Idle Condition	Not required (No extensions are allowed to be in programming mode except system programming console)
Planning Form	Form 1, System Planning
Factory Setting	Not applicable
Valid Entries	1- to 11-character filename
Inspect	Yes
Copy Option	No
Console Procedure	Insert memory card→System→Back/Restore→Backup→Select backup file→Dial the new backup filename→Enter→Yes→Exit→Exit→Exit
PC Procedure	Insert memory card→F1→F9→F1→Select backup file→Type the new backup filename→F6→F1→F5→F5→F5

Procedure: Backup

Console Display/Instructions **Additional Information** **PC**

▶ **1. Insert the memory card into the PCMCIA interface slot on the processor module.**

See Figure 3–5, “Inserting the Memory Card.”

▶ **2. Select the System menu.**

```
System Programming:      >
Make a selection
System          Extensions
SysRenumber     Options
Operator        Tables
LinesTrunks     AuxEquip
Exit            NightSrvce
```

F1

▶ **3. Select Back/Restore.**

```
System:
Make a selection
Restart         MaintenBusy
SProg Port      Date
Mode            Time
Board Renum     Back/Restore
Exit
```

F9

Console/Display Instructions **Additional Information** **PC**

▶ 4. Select Backup.

```
Memory Card:
Make a selection
Backup          Restore
Auto Backup


Exit
```

F1

▶ 5. Select the backup filename.

```
Memory Card Backup:
Make a selection
BACK1.****      AUT01.****
BACK2.****      AUT02.****
BACK3.****

Exit
```

If you select AUTO.BACK1 or AUTO.BACK2, go to Step 8. You cannot rename either of these two files.

If you select BACK1., BACK2., or BACK3. and do not want to rename the file, go to Step 8.

Press the button or function key next to your selection.

▶ 6. Rename the backup file (*n* = 1 to 11 characters).

```
Backup File:  Enter name
BACKx.mmdd
Punctuation            Enter
Backspace               Exit
A     '              ,     B
C     -              &     D
E     .          Space     F
```

x = backup file selected in Step 5
mm/dd = current month and day

Use Punctuation to toggle between the letters and punctuation.

Enter or type [*filename*].
Use the buttons next to the display to specify the letters A through I and punctuation. Use the line/feature buttons to specify additional alphanumeric characters for labels. Use the template provided with the MLX-20L telephone to see which line buttons correspond to which alphanumeric characters.

▶ 7. Save your entry.

Select Enter.

F6

NOTE:
F6, not F10.

Console/Display Instructions	Additional Information	PC
▶ 8. Respond to the prompt.		
Backup *filename*: Do you want to continue? Yes No Exit	*filename* = file selected in Step 5 or entered in Step 6 Select No to terminate the backup. Go to Step 11. Select Yes to continue the backup.	 F2 F1
▶ 9. Observe the backup progress screen.		
Backup *filename*: Backup in Progress, Please Wait. *xx*% completed Exit	*filename* = file selected in Step 5 or entered in Step 6 *xx*% = percentage of backup completed	
▶ 10. Observe the backup completion screen.		
Backup *nnnnnnnnnnn*: Backup Successfully Completed. Exit	*nnnnnnnnnnn* = backup filename	
▶ 11. Return to the System Programming menu.		
Select Exit three times.		F5 F5 F5

Automatic Backup

To preserve the most recent copy of your customized system data, you can program the system to automatically backup programming information onto the translation memory card. Automatic backups may be set for daily or weekly operation. If automatic backup is activated, the time may be set for daily backup (factory setting is 2:00 am) or the time and day may be set for weekly backup (factory setting is 2:00 am Sunday).

The system places the automatic backup into one of two designated files: AUTO.BACK1 and AUTO.BACK2. If both files are empty, the system places the backup in AUTO.BACK1. If both files already contain backups, the system selects the older of the two files and overwrites it. The system performs this file “toggle” each time it performs an automatic backup.

While the backup is in progress, you cannot access system programming functions, your Personal Directory, or alarm clock functions (any programmed alarms are temporarily deactivated).

If any type of programming is taking place at an extension during the automatic backup procedure, the backup is canceled. The system does not re-attempt the backup.

If an automatic backup fails for any reason (including a system-busy condition), all of the programmed alarm buttons on system operator consoles light and the information is recorded in both the permanent error log and the last 10 error logs. The system does not re-attempt the backup.

Also see "Backup Messages" on page 3–637 for information about errors that may occur during the automatic backup procedure.

NOTE:
If an automatic backup fails for any reason (except when the failure results because the memory card is write-protected) the automatic backup feature is turned off. Follow the procedure below to reprogram automatic backups.

Summary: Automatic Backup

Programmable by	System Manager
Mode	All
Idle Condition	Not required (No extensions are allowed to be in programming mode including the system programming console)
Planning Form	Form 1, System Planning
Factory Setting	Weekly backup: Sunday at 2:00 am (if daily backup is selected, time is factory set for 2:00 am)
Valid Entries	Daily: hhmm (00 to 23; 00 to 59) Weekly: dhhmm (0 to 6; 00 to 23; 00 to 59)
Inspect	No
Copy Option	No
Console Procedure	To program daily backup: Insert memory card→System→Back/Restore→ Auto Backup→Daily→**Drop**→Dial time→ Enter→Exit→Exit To program weekly backup: Insert memory card→System→Back/Restore→ Auto Backup→Weekly→**Drop**→Dial day and time→ Enter→Exit→Exit

PC Procedure

To program daily backup:
Insert memory card→[F1]→[F9]→[F2]→[F2]→
[Alt] + [P]→Type time→[F10]→[F5]→[F5]

To program weekly backup:
Insert memory card→[F1]→[F9]→[F2]→[F3]→
[Alt] + [P]→Type day and time→[F10]→[F5]→[F5]

Procedure: Automatic Backup

Console Display/Instructions	Additional Information	PC
▶ **1. Insert the memory card into the PCMCIA interface slot on the processor module.**		
▶ **2. Select the System menu.**		
System Programming: > Make a selection System Extensions SysRenumber Options Operator Tables LinesTrunks AuxEquip Exit NightSrvce		[F1]
▶ **3. Select Back/Restore.**		
System: Make a selection Restart MaintenBusy SProg Port Date Mode Time Board Renum Back/Restore Exit		[F9]
▶ **4. Select Auto Backup.**		
Memory Card: Make a selection Backup Restore Auto Backup Exit		[F2]

Console/Display Instructions	Additional Information	PC

▶ 5. Make a selection.

```
Auto MemCard Backup:
Select one
Off
Daily
Weekly

Exit            Enter
```

Select Off, Daily, or Weekly — F1 F2 F3

▶ 6. Save your entry. ● ◆

Select Enter. — F10

If you selected Off you have finished this procedure. Go to Step 7.
If you selected Daily go to ● Daily Backup Procedure.
If you selected Weekly go to ◆ Weekly Backup Procedure.

▶ 7. Return to the System Programming menu.

Select Exit twice. — F5 F5

● Daily Backup Procedure

Console/Display Instructions	Additional Information	PC

▶ 1. Erase the current daily backup time (*xxxx*).

```
Daily MemCard Backup:
Enter hour (00-23) and
minutes (00-59) hhmm
xxxx

Backspace
Exit            Enter
```

Press **Drop**. — Alt+P

▶ 2. Enter the time when you want the automatic backup to run every day (*hh* = 00 to 23, *mm* = 00 to 59).

```
Daily MemCard Backup:
Enter hour (00-23) and
minutes (00-59) hhmm



Backspace
Exit            Enter
```

Dial or type [*hhmm*].

Console/Display Instructions **Additional Information** **PC**

▶ **3. Save your entry.**

Select Enter. F10

▶ **4. Return to the System Programming menu.**

Select Exit twice. F5 F5

◆ **Weekly Backup Procedure**

Console/Display Instructions **Additional Information** **PC**

▶ **1. Erase the current weekly backup day and time (*xxxxx*).**

```
Weekly MemCard Backup:
Enter day (0-6) hr (00-23)
and min (00-59) dhhmm
xxxxx

Backspace
Exit            Enter
```

Press **Drop**. Alt + P

▶ **2. Enter the day (*d* = 0 to 6) and time (*hh* = 00 to 23, *mm* = 00 to 59) when you want the automatic backup to run each week.**

```
Weekly MemCard Backup:
Enter day (0-6), hr (00-23)
and min (00-59) dhhmm



Backspace
Exit            Enter
```

0 = Sunday, 1 = Monday, and so on.

Dial or type [*dhhmm*].

▶ **3. Save your entry.**

Select Enter. F10

▶ **4. Return to the System Programming menu.**

Select Exit twice. F5 F5

Backup Messages

During manual or automatic backup procedures, additional screens may appear to alert you to problems with the translation memory card, the backup file, or the backup procedure. This section contains displays of each screen and information about what to do if the screen appears.

NOTE:
The screens shown in this section are from the manual backup procedure; however, the screens that may appear in both the manual and automatic backup procedures are similar. The screens in both procedures differ only in the appearance of the first line. On the automatic backup screens, `Auto MemoryCard Backup` replaces `Memory Card Backup` shown on the screens below.

Backup Canceled

If the system detects an error, either on the memory card or with the backup file, or if you terminate the backup, this screen appears.

```
Backup x:
BACKUP IS CANCELED.
File has been DELETED.



Exit
```

x = backup filename

The backup file being created is deleted and the backup is terminated. You must repeat the backup procedure.

Card Removed While Backup Is in Progress

The memory card is not inserted or is inserted incorrectly while a backup is in progress. The backup file that was being created is deleted and the backup is terminated. You must reinsert the memory card and repeat the backup procedure.

```
Backup x:
BACKUP IS CANCELED.
Verify that Memory Card
has been inserted
correctly.
File has been DELETED.


Exit
```

x = backup filename

Card Missing or Card Not Inserted Correctly

The memory card is either not inserted or is inserted incorrectly. The backup is terminated. You must reinsert the memory card and repeat the backup procedure. This screen may also appear if the wrong type of memory card is inserted and a backup or automatic backup is requested within one minute of insertion. Verify that the card is a translation memory card.

```
Memory Card Backup:
Verify that Memory Card
has been inserted
correctly.



Exit
```

Card Is Write-Protected

The memory card is write-protected. You must remove the memory card, flip the write-protect tab, reinsert the memory card, and repeat the backup procedure.

```
Memory Card Backup:
Memory Card is Write-
Protected.
Reset Write-Protect Tab
on Memory Card.

Exit
```

CAUTION:
The memory card may be write-protected to avoid the accidental erasure of the backup files. Make certain this is not the case before you change the write-protect tab.

Card Failure

If the card is damaged, repeat the backup with a different card. If a backup is in progress and fails, the system makes two additional attempts at the backup. At the start of each attempt, a message appears with the percentage of the backup that is completed. If the backup fails after three attempts, the screen shown below appears. Repeat the backup procedure using a different file and/or memory card.

```
Memory Card Backup:
Backup Failure
Try a different file or
a new Memory Card.



Exit
```

Restore

Use this procedure to restore system conditions that were backed up onto a translation memory card. The information in a backup file on the translation card is copied to the system.

The restore procedure is necessary under the following conditions:

- System RAM is corrupt.
- A previously stored set of system conditions is preferred over the current set.
- The processor module is replaced.
- After a System Erase (frigid start) has been performed.
- The system software has been reinstalled.

The Inspect feature (**Inspct** or PgDn) is available to view the attributes of the backup files on the memory card prior to initiating the restore procedure. The attributes included on the Inspect screen are the filename, the time and day of the file creation/update, the location of the system programming port, and information about the system software release from which the backup was made.

If any type of programming is taking place at another extension when you begin the restore procedure, the restore is canceled and the number of the first busy extension appears on the screen. Repeat the restore procedure when the busy extension becomes idle.

If a line is busy (incoming call or active call) when you begin the restore procedure, the restore is canceled and the number of the first active line appears on the screen. Repeat the restore procedure when the line becomes idle.

Also see "Restore Messages" on page 3–642 for information about errors that may occur during the restore procedure.

Summary: Restore

Programmable by	System Manager
Mode	All
Idle Condition	System Forced Idle
Planning Form	Not applicable
Factory Setting	Not applicable
Valid Entries	Not applicable
Inspect	Yes
Copy Option	No

Console Procedure	Insert memory card→System→Back/Restore→ Restore→Select restore file→Yes
PC Procedure	Insert memory card→F1→F9→F5→ Select restore file→F3

Procedure: Restore

Console Display Instructions	Additional Information	PC
▶ **1. Insert the memory card into the PCMCIA interface slot on the processor module.**		
▶ **2. Select the System menu.**		

```
System Programming:      >
Make a selection
System          Extensions
SysRenumber     Options
Operator        Tables
LinesTrunks     AuxEquip
Exit            NightSrvce
```

F1

▶ **3. Select Back/Restore.**

```
System:
Make a selection
Restart         MaintenBusy
SProg Port      Date
Mode            Time
Board Renum     Back/Restore
Exit
```

F9

▶ **4. Select Restore.**

```
Memory Card:
Make a selection
Backup          Restore
Auto Backup


Exit
```

F5

Console/Display Instructions	Additional Information	PC

▶ 5. Inspect the backup files present on the Memory Card.

```
MemCard Restore Files:   >

aaaaaaaaa MM/DD HH:MM
SProg Port: xxxx X.Y
bbbbbbbbbb MM/DD HH:MM
SProg Port: xxxx X.Y
Exit
```

Press **More** to view additional files. Alt+P

aaaaaaaaaa, *bbbbbbbbb* = filenames
xxxx = System Programming Port
MM/DD HH:MM = date and time
X.Y = system software release

Press Exit to continue. F5

▶ 6. Select the restore file.

```
Memory Card Restore:
Select one
BACK1.mmdd    AUTO.BACK1
BACK2.mmdd    AUTO.BACK2
BACK3.mmdd

Exit            Enter
```

mmdd = month and day of backup

Press the button or function key next to your selection.

▶ 7. Observe the restore file validation screen.

```
Memory Card Restore:

File is being validated.
```

▶ 8. Respond to the prompt.

```
Restore n:
System will be down ...
Do you want to continue?
Yes
No

Exit
```

n = filename selected in Step 5

Select No to terminate the restore. F3
Go back to Step 5.

Select Yes to continue the restore. F2

Console/Display Instructions	Additional Information	PC

▶ **9. Observe the restore progress screen.**

```
Restore N :
Restore in Progress,
Please Wait.
```

n = filename selected in Step 5

▶ **10. Observe the restore file validation screen.**

```
Restore N :
Restore Successfully
Completed.
System is Restarting.
Please Wait.
```

n = filename selected in Step 5

The session is finished, and the system restarts. You must enter system programming again if you wish to continue programming.

Restore Messages

During the restore procedure, additional screens may appear to alert you to problems with the translation memory card, the backup file or the restore procedure. This section contains displays of each screen and information about what to do if the screen appears.

Card Missing or Card Not Inserted Correctly

```
Memory Card Restore:
Verify that Memory Card
has been inserted
correctly.

Exit
```

The memory card is either not inserted or inserted incorrectly. The restore is aborted. You must reinsert the card and repeat the restore procedure. This screen may also appear if the wrong type of memory card is inserted and a restore is requested within one minute of insertion. Verify that the card is a translation memory card.

Card Removed after Confirmation

```
Memory Card Restore:
RESTORE IS CANCELED.
System is DOWN.
```

The memory card was removed from the PCMCIA interface slot while the restore was in progress. The restore is aborted and the system performs a System Erase (frigid start). You must reinsert the memory card and repeat the restore procedure.

Wrong System Programming Port

```
Restore n :
Change Sys Programming
Port to Extension xxxx
before Restoring.

Exit
```

n = filename selected
xxxx = system programming port extension

The system programming port is not set to the same system programming port as that set in the backup file. The restore is aborted. Use the **Inspect** feature to view the port of the file on the card. Change the system programming port to match the port shown on the card (see "System Programming Position Assignment" on page 3–4) and repeat the restore procedure.

Release Mismatch

```
Restore n:
File is Not Compatible
for Release X.Y
Restore Canceled.
Conversion Required.

Exit
```

n = filename selected
X.Y = release number

This screen only appears if you are upgrading from Release 3.0 or higher and the releases are not compatible.

Card Failure Before Confirmation

```
Memory Card Restore:
Restore Failure.
Try a different file
or a new Memory Card.



Exit
```

If the restore fails because the card is damaged, repeat the restore procedure using a different file and/or memory card.

Card Failure after Confirmation

```
Restore n :
Restore Failure
RESTORE IS CANCELED.

System is DOWN.
```

n = filename selected

If the restore fails because the card is damaged, the system performs a System Erase (frigid start). Repeat the restore procedure using a different file and/or memory card.

Wrong Type of Card

```
Memory Card Restore:
Inserted Memory Card is
not the correct type.
Remove and insert MERLIN
LEGEND Backup/Restore
Card.
Exit
```

The inserted card does not match the card option selected from the System menu. Remove the card and repeat the restore procedure with the correct type of card. See "Card Types" on page 3–624 for information about the card labels.

Board Mismatch

```
Restore n :
Restore Failure
RESTORE IS CANCELED.
Board mismatch between
control unit and file.

Exit
```

n = filename selected

A mismatch exists between the hardware components present on the current system and the hardware components reflected in the backup file. The restore is aborted. You can do one of the following:

- Repeat the restore procedure with another file.
- Modify the system hardware to match the configuration of the backup file and repeat the restore procedure with the same file.

Strap in Place for Key Mode but Mode is Set to Hybrid

```
Restore n:
Restore Failure
RESTORE IS CANCELED.
Restore File Mode is
Hybrid/PBX. Control Unit
strap in place for KEY.
Exit
```

n = filename selected

CAUTION:
This procedure should be performed only by qualified service personnel.

If the processor module has been set for Permanent Key mode, a restore to Hybrid/PBX mode is not possible. A service associate must be notified in order to modify the processor.

Centralized Telephone Programming

4

This chapter describes centralized telephone programming for the system manager and includes the following information:

- Accessing centralized telephone programming
- Programming the features available with this function
- Programming a single telephone
- Copying programmed features from one extension to another extension (Release 2.0 and higher)

See the *Feature Reference* or the appropriate user or operator guide for details about each feature.

NOTE:
Only the system manager should perform the programming procedures described in this chapter.

Introduction

Centralized telephone programming allows the system manager to program any feature that can be programmed by individual telephone users, or by the system operator, onto another telephone in the system. Any feature that can be programmed at an individual telephone can be programmed using centralized telephone programming.

The following features can be programmed only by using centralized programming:

- Barge-In
- Headset Hang Up
- Intercom buttons: all types (Key and Behind Switch mode only)
- Service Observing button
- System Access buttons: all types (Hybrid/PBX only)

NOTE:
Service Observing may be subject to federal, state, or local laws, rules, or regulations or require the consent of one or both of the call parties. You must check in your jurisdiction and comply with all applicable laws, rules, and regulations before using this feature. Failure to comply may result in severe penalties.

To perform centralized telephone programming, you can use the system programming console (see Chapter 1, “Programming Basics”) or a PC with SPM software (see Chapter 2, “Programming with SPM”).

In Release 2.0 and higher, if you are programming several telephones of the same type (that is, all analog or all MLX), program one extension and then use the programmed extension as a template for programming additional extensions. See “Copy Extension” on page 4–13, and also refer to the planning forms.

Some programming can be performed only when the entire system or some part of it (such as a trunk or an extension) is idle. See “Idle States” on page 47.

Access to Centralized Telephone Programming

Access the Centralized Programming menu from the System Programming menu. Centralized programming is performed by selecting features from the display or by using programming codes.

Follow the procedure below to access the Centralized Programming menu.

Console Display/Instructions	Additional Information	PC

NOTE:
Go to the second screen of the System Programming menu.

```
System Programming:      >
Make a Selection
System          Extensions
SysRenumber     Options
Operator        Tables
LinesTrunks     AuxEquip
Exit            NightSrvce
```

Press **More.** PgUp

▶ **1. Select Centralized Programming.**

```
System Programming
Make a selection
Labeling
Data
Print
Cntr-Prg
Exit
```

F4

▶ **2. Select a programming option.**

```
Centralized Programming:
Make a selection
Program Ext
Copy Ext


Exit            Enter
```

Select Program Ext or F1
Copy Ext. F2

▶ **3. Go to the "Program Extension" or "Copy Extension" section as appropriate.**

The sections that follow explain the use of menu selections for programming a single extension (Program Extension), and for using one extension as a template for programming several extensions of the same type (Copy Extension).

NOTE:
It is recommended that you use the programming codes for centralized programming; however, you may also use the `List Features` option that is available on the programming screen. See "Using the List Feature Menu" on page 4–12 for details about this option.

Program Extension

Review the items below before you begin to program extensions.

- Use Table 4–1 on page 4-7 to locate the code for the feature that you want to program.
- If you enter a feature code incorrectly or enter a feature code that is not appropriate for the button, a beep sounds or the message `Programming Error` appears and the green LED next to the button flashes. If this happens, press the button again and repeat the procedure.
- If you make a mistake and program the wrong feature on a button, follow the steps below:
  1. Press the button.
  2. Select `Delete` (press F2 on the PC).
  3. Press the button again.
- If you press a line button that is not active, the screen shown here appears. Press **Home** to return to the Home screen.

```
Blank
Press HOME to Exit
                    Page 1
                    Page 2



Sys Program     ListFeature
```

- You can use the Extension Information (`Ext Info`) report option on the Print menu to print all of the programmed features for a specific extension.

At the Centralized Programming menu, follow the procedure below to program features onto a single telephone.

Console Display/Instructions **Additional Information** **PC**

1. Select Program Extension.

```
Centralized Programming:
Make a selection
Program Ext
Copy Ext

Exit            Enter
```

F1

2. Specify the extension you want to program.

```
Centralized Programming:
Enter extension

Backspace
Exit            Enter
```

SP: “Entering an Extension”

3. Save your entry.

Select Enter.

F10

4. Select Start.

```
Extension Program    xxxx
Press HOME to Exit

Sys Program          Start
```

xxxx = extension entered in Step 2

F10

Console Display/Instructions **Additional Information** **PC**

▶ **5. Select the line button to which you want to assign the feature.**

```
Select Button:
Extension Program     xxxx
                      Page 1
                      Page 2


Sys Program
```

xxxx = extension entered in Step 2

Press the line button or function key that corresponds to your selection.

OR

Select Page 2 to access line button 21 and above. F7

If you are programming a telephone with more than 20 line buttons, use Page 2 to select line button 21 and above. See Appendix E for button diagrams of all telephones.

▶ **6. Program the feature(s).**

```
Line xxx - *
Press HOME to Exit
                      Page 1
                      Page 2


Sys Program     ListFeature
```

xxx= line selected in Step 5

*= current feature programmed

Use Table 4–1 to dial or type the programming code: *[*nnn*]

OR

Select ListFeature and see "Using the List Feature Menu" on page 4–12. F10

When the line button is programmed, the system automatically returns to the screen in Step 5.

▶ **7. Repeat Steps 5 and 6 for each line button you want to program for the extension, or press Home to return to the Centralized Programming menu.**

Programming Codes

Table 4–1 provides a quick reference to the programming codes for the system features.

Table 4–1. Telephone Programming Codes

Feature	Programming Code
Account Code Entry	*82
Alarm*	*759
Authorization Code	*80
Auto Answer All	*754
Auto Answer Intercom	*753
Auto Dial	
Inside (ext., group, zone)	*22 + ext. no.
Outside	*21 + tel. no.
Automatic Line Selection	
Begin Sequence	*14
End Sequence	**14
Barge-In*†	*58
Callback	
Automatic	
On	*12
Off	**12
Selective	*55
Call Waiting	
On	*11
Off	**11
Camp-On	*57
Conference	*772

* System operator feature only
† Centralized telephone programming only

Continued on next page

Table 4–1. Telephone Programming Codes *(Continued)*

Feature	Programming Code
Coverage	
Cover inside and outside calls	*48
Cover outside calls only	**48
Receiver buttons	*42 + ext. no.
Group	
Primary	*40 + ext. no.
Secondary	*41 + ext. no.
Sender buttons	
Coverage Off	*49
Coverage VMS Off	*46
Data Status	*83 + ext. no.
Direct Voice Mail	*56
Directories	
Extension Directory	*(display only)*
Personal Directory	*(display only)*
System Directory	*(sys. prog.)*
Do Not Disturb	*47
Drop	*773
Extension Status	
Direct-Line Console*	
Status Off	*760
Status 1	*761
Status 2	*762
Telephones (rooms or agents)	
Status 1	*45
Status 2	*44
Feature Button	*20
Forward	
Activate	
Forward (inside)	*33
Remote Call Forward and Centrex Transfer via Remote Call Forward (outside)	*33

* System operator feature only

Continued on next page

Table 4–1. Telephone Programming Codes *(Continued)*

Feature	Programming Code
Group Calling	
In-Queue Alarm button	**22 + calling group ext. no.*
Calling group supervisor	
Member available	**762*
Member unavailable	**760*
Calling group members	
Sign in (Available)	**44*
After-call work state (CMS only)	**45*
Group Page Auto Dial Button	**22 + paging group ext. no.*
Headset Options	
Auto Answer	**780*
Hang Up†	**781*
Mute (Headset/Handset)	**783*
Status	**782*
Intercom buttons	
Assign buttons*	
ICOM (Default Ring)	**16*
ICOM Originate Only	**18*
Change button type	
Ring	***19*
Voice	**19*
Last Number Dial	**84*
Messaging	
Leave Message	**25*
Message LED off	**54*
Posted Message	**751*
Send/Remove Msg†	**38*
Receiving messages	
Delete Message‡	**26*
Next Message‡	**28*
Return Call‡	**27*
Scroll‡	**29*

* Centralized telephone programming only

† System operator feature only

‡ Display telephones only. Programming and feature codes are used with analog multiline telephones only.

Continued on next page

Table 4–1. Telephone Programming Codes *(Continued)*

Feature	Programming Code
Night Service†	*39
Notify	
Send	*757 + ext. no.
Receive	*758 + ext. no.
Park	*86
Park Zone Auto Dial*	*22 + park zone
Personal Speed Dial	# + (01–24) + *21 + tel no. + ##
Personalized Ringing	*32 + ring (1–8)
Pickup	
General use	*9
Specific extension	*9 + ext. no.
Specific line	*9 + line no.
Group	*88
Privacy On	*31
Recall	*775
Reminder Service	
Set*	*81
Cancel	**81
Missed†	*752
Ringing/Idle Line Preference	
On	*343
Off	*344
Ringing Options	
Individual lines	
Immediate ring	*37
Delay ring	*36
No ring	*35
All lines	
Immediate ring	*347
Delay ring	*346
No ring	*345
Abbreviated ring	
On	*341
Off	*342
Send Ring (Shared **SA**)	
On	*15
Off	**15

* English only: time is 12-hour (0100-1259) + 2 (A) or 7 (P); French and Spanish: time is 24-hour (0000-2359).

† System operator feature only

Continued on next page

Table 4–1. Telephone Programming Codes *(Continued)*

Feature	Programming Code
Saved Number Dial	*85
Send/Remove Message*	*38
Service Observing†‡	*59 + *ext. no.*
Signal (manual)	*23 + *ext. no.*
System Access buttons	
Assign buttons†	
SA (Default Ring)	*16
SA Originate Only	*18
Shared **SA**	*17 + *primary ext. no.*
Change type (**SA** or Shared **SA**)	
Ring	**19
Voice	*19
System Speed Dial	*24 + *code (600–729)*
Timer	
Transfer	*774
Voice Announce to Busy	
On	*10
Off	**10

* System operator feature only
† Centralized telephone programming only
‡ MLX telephones only. Cannot be a QCC or CTI link.

Using the List Feature Menu

You can use the List Feature menu to select a feature, instead of using a programming code. When you select `ListFeature` (or press *0*), the first screen of features appears as shown below.

```
Select a Feature:      >
Extension Program   xxxx
Find Feature     Barge In
AccountCode      Call Waiting
Auth Code        Camp On
Auto Dial        Cback Auto
AutoLineSel      Cback Sel
```

xxxx = previously entered extension

There are additional feature option screens. Press **More** to move through the screens. Press the button or function key that corresponds to your selection.

You can also use the `FindFeature` option to display alphabetized lists of features that begin with the letter(s) you select. The Find Feature screen is shown below.

```
Choose Starting Letter
Press HOME to Exit
ABC              PQRS
DEF              TUV
GHI              WXYZ
JKL
MNO
```

Press the button or function key that corresponds to the first letter of the feature you want. The resulting screen displays all of the features that begin with the selected letters. If the list of features for the letters you select does not fill a complete screen, the screen display continues with the next alphabetic feature. Press **Home** to return to the Home screen.

Copy Extension

The system manager uses the copy extension feature to copy an extension's programmed buttons (with some exceptions) to one or more extensions. The features are individually programmed on an extension, creating a template that can then be copied to other extensions in the system.

Only extensions of the same type can be copied to one another (that is, analog to analog, and MLX to MLX), since the two extension types have different button layouts. For a system that has both analog and MLX telephone types, you will need two templates: one for analog and one for MLX.

An MFM can be copied to or from another MFM. A DLC can only be copied to another DLC. Single-line telephones and QCCs *cannot be copied to or from.*

Features That Can Be Copied

Table 4–2 lists the features that can be copied to another extension. Features that can be copied for DLC operator extensions are listed in Table 4–3 on page 4-16.

Table 4–2. Features That Can Be Copied: All Telephones

Feature	Analog and MLX Telephones	Analog Telephones Only	MLX Telephones Only
Account Code Entry	✓		
Authorization Code*	✓		
Auto Answer All		✓	
Auto Answer Intercom		✓	
Auto Dial Inside	✓		
Auto Dial Outside*	✓		
Barge-In	✓		
Callback-Selective	✓		
Camp-On	✓		
Conference†	✓		
Coverage Off	✓		

Continued on next page

Table 4–2. Features That Can Be Copied: All Telephones *(Continued)*

Feature	Analog and MLX Telephones	Analog Telephones Only	MLX Telephones Only
Coverage VMS Off	✓		
Data Status	✓		
Direct Voice Mail	✓		
Do Not Disturb	✓		
Drop†	✓		
Extension Status 2 (ES2) (Non-operator)	✓		
Extension Status 1 (ES1) (Non-operator)	✓		
Feature Button		✓	
Forward	✓		
Group Calling	✓		
Group Page	✓		
Headset Auto Answer			✓
Headset Hang Up			✓
Headset Status			✓
Headset/Handset Mute			✓
Last Number Dial*	✓		
Delete Message		✓	
Leave Message	✓		
Message Light Off	✓		
Next Message		✓	
Posted Message	✓		
Return Call		✓	
Scroll		✓	

Continued on next page

Table 4–2. Features That Can Be Copied: All Telephones *(Continued)*

Feature	Analog and MLX Telephones	Analog Telephones Only	MLX Telephones Only
Park	✓		
Pickup: Group	✓		
Pickup: General	✓		
Pickup: Extension	✓		
Pickup: Line	✓		
Privacy	✓		
Recall	✓		
Reminder Service: Set	✓		
Reminder Service: Cancel	✓		
Saved Number Dial*	✓		
Signaling	✓		
SA/ICOM Ring‡	✓		
SA/ICOM Voice†	✓		
SA/ICOM Originate Only†	✓		
System Speed Dial	✓		
Transfer†	✓		

* Number is **not copied.**

† Behind Switch mode only.

‡ Ringing options (No Ring, Delay Ring, and Immediate Ring) are copied with the button.

Table 4–3 shows the operator features than can be copied for operator consoles. QCC features cannot be copied.

Table 4–3. Features That Can Be Copied: Direct-Line Consoles Only

Feature	Analog Direct-Line Console (DLC)	MLX Direct-Line Console (DLC)
Alarm	✓	✓
Extension Status Off	✓	✓
Extension Status 1	✓	✓
Extension Status 2	✓	✓
Missed Reminder	✓	✓
Night Service	✓	✓
Operator Park	✓	✓
Send/Remove Message	✓	✓

Use the procedure below to copy programming from one extension to another.

Console Display/Instructions **Additional Information** **PC**

▶ **1. Select Copy Extension.**

```
Centralized Programming:
Make a selection
Program Ext
Copy Ext


Exit          Enter
```

F2

▶ **2. Specify the number of the extension from which you want to copy programming features.**

```
Extension Program Copy:
Enter extension to copy
from


Backspace
Exit          Enter
```

SP: “Entering an Extension”

Console Display/Instructions	Additional Information	PC

▶ 3. Save your entry.

Select **Enter.** F10

▶ 4. Specify the number of the extension to which you want to copy programming features.

```
Copy extension xxxx to:
Enter extension
Backspace
Exit            Enter
```

xxxx = extension entered in Step 2

SP: "Entering an Extension"

▶ 5. Continue to copy line assignments from the copy extension shown to another extension or go to Step 7.

Select **Enter** or F10
Next. F9

Use **Enter** to continue to copy line assignments from the extension currently displayed on Line 1 to additional extensions.

Use Next if the extension numbers to be copied to are sequential. Select Enter (F10) after completing programming.

Go to Step 4 to continue programming. The extension to be copied from will be displayed on Line 1.

▶ 6. Return to Centralized Programming menu.

Select **Exit.** F5

Feature Quick Reference

The following feature descriptions provide a quick reference for using centralized telephone programming.

Account Code Entry

Assign a button for account code entry.

Summary: Account Code Entry

Telephones	All (except QCC)
Mode	All (except single-line telephone in Behind Switch mode)
Programmable by	Users and system manager
Programming Code	*82
Display Label	AccountCode

Alarm

Assign a button to alert the operator to system problems.

Summary: Alarm

Telephones	DLC operator only
Mode	All
Programmable by	DLC operator and system manager
Programming Code	*759
Display Label	Alarm

Authorization Code

Assign a button for authorization code entry.

Summary: Authorization Code

Telephones	All (except QCC)
Mode	All (except single-line telephone in Behind Switch mode)
Programmable by	Users and system manager
Programming Code	*80
Display Label	Auth Code

Auto Answer All

Assign a button to direct calls to an answering device when the user is not available.

Summary: Auto Answer All

Telephones	Analog multiline only
Mode	All
Programmable by	Users and system manager
Programming Code	*754
Display Label	AutoAns All

Auto Answer Intercom

Assign a button to answer both inside and outside calls without lifting the handset.

Summary: Auto Answer Intercom

Telephones	Analog multiline only
Mode	All
Programmable by	Users and system manager
Programming Code	*753
Display Label	AutoAnsIcom

Auto Dial

Assign buttons for one-touch dialing of frequently called inside or outside numbers.

Summary: Auto Dial Inside and Outside

Telephones	Analog multiline, all MLX telephones (except QCC)
Mode	All
Programmable by	Users and system manager
Programming Code	Inside: *22 + *ext. no.* + Enter Outside: *21 + *telephone no.* + Enter
Display Label	Auto Dial Inside/Outside

Automatic Line Selection

Select the order in which the system makes outside lines available to the user.

NOTE:
Your current Automatic Line Selection table is deleted immediately after you select this feature by either selecting AutoLineSel from the display or pressing *14. *There is no way to cancel the operation. You must program new selections and then press **14 to end the operation.*

Summary: Automatic Line Selection

Telephones	Analog multiline and all MLX telephones
Mode	All
Programmable by	Users and system manager
Programming Code	Enter: *14 Exit: **14
Display Label	AutoLineSel

Barge-In

Assign a button to allow an operator to interrupt a user's call in an emergency.

Summary: Barge-In

Telephones	All except single-line telephone or QCC
Mode	All
Programmable by	System manager only
Programming Code	*58
Display Label	Barge In

Callback

With Automatic Callback turned on, the system retries calls to busy extensions or busy trunk pools. Assign a Selective Callback button to allow the system to retry calls to busy extensions or busy trunk pools on a call-by-call basis.

NOTE:
To use the Callback feature on loop-start lines/trunks, the loop start line/trunk must be programmed for reliable disconnect. See "Disconnect Signaling Reliability" on page 61.

Summary: Automatic Callback

Telephones	All
Mode	All
Programmable by	Users and system manager
Programming Code	On: *12 Off: **12
Display Label	Cback Auto On/Off

Summary: Selective Callback

Telephones	All
Mode	All
Programmable by	Users and system manager
Programming Code	*55
Display Label	Cback Sel

Call Waiting

With Call Waiting turned on, a user on a call will know that another call is waiting. The person at the extension hears one beep for a waiting inside call, two for an outside call.

Summary: Call Waiting

Telephones	All
Mode	All
Programmable by	Users and system manager
Programming Code	On: *11 Off: **11
Display Label	CallWaiting On/Off

Camp-On

Assign a button to allow a user to complete a transfer to a busy extension.

Summary: Camp-On

Telephones	Analog multiline and MLX telephones (except QCC)
Mode	All
Programmable by	Users and system manager
Programming Code	*57
Display Label	Camp On

Conference

Assign a button to access the host system conference feature.

Summary: Conference

Telephones	Analog multiline and MLX telephones (except QCC)
Mode	Behind Switch
Programmable by	Users and system manager
Programming Code	*772
Display Label	Conference

Coverage

Assign a button to establish Coverage; senders' calls are covered by receivers.

Summary: Receiver Buttons–Primary, Secondary, Group

This procedure assigns primary, secondary, or group coverage receivers.

Telephones	All (except QCC)
Mode	All
Programmable by	Users and system manager
Programming Code	Primary: *40 + *ext. no.* + Enter Secondary: *41 + *ext. no.* + Enter Group: *42 + *group no.* + Enter
Display Label	Coverage Primary/Secondary/Group

Summary: Coverage Inside Off/On

This procedure allows or prevents Coverage of inside calls.

Telephones	Analog multiline and MLX telephones (except QCC)
Mode	All
Programmable by	Users and system manager
Programming Code	In/Outside Calls: *48 Outside Calls Only: **48
Display Label	CoverInside, On/Off

Summary: Sender Buttons, Coverage Off

This procedure turns off all Coverage.

Telephones	Analog multiline and MLX telephones (except QCC)
Mode	All
Programmable by	Users and system manager
Programming Code	*49
Display Label	Coverage Off

Summary: Coverage VMS Off

This procedure prevents outside calls from being sent to voice mail.

Telephones	Analog multiline and MLX telephones (except QCC)
Mode	All
Programmable by	Users and system manager
Programming code	*46
Display Label	Coverage VMS Off

Data Status

Assign a button to indicate when a data call is in progress.

Summary: Data Status

Telephones	All (except QCC)
Mode	All
Programmable by	Users and system manager
Programming Code	*83 + *ext. no.* + Enter
Display Label	Data Status

Direct Voice Mail

This feature allows one user to call another user's voice mail, without ringing that user's telephone.

Summary: Direct Voice Mail

Telephones	All
Mode	All
Programmable by	Users and system manager
Programming Code	*56
Display Label	Direct VoiceMail

Do Not Disturb

Assign a button to prevent calls from ringing at the telephone.

Summary: Do Not Disturb

Telephones	Analog multiline and MLX telephones (except QCC)
Mode	All
Programmable by	Users and system manager
Programming Code	*47
Display Label	DoNotDisturb

Drop

Assign a button to access the host system Drop feature.

Summary: Drop

Telephones	Analog multiline and MLX telephones (except QCC)
Mode	Behind Switch
Programmable by	Users and system manager
Programming Code	*773
Display Label	Drop

Extension Status

Assign a button to allow system operators or supervisors to monitor the status of extensions, and restrict use of telephones (hotel configuration) or change group members' availability to take calls (Group Calling/CMS configuration).

Summary: DLC Extension Status

Telephones	DLCs only
Mode	All
Programmable by	System manager only
Programming Code	Off: *760 ES1: *761 ES2: *762
Display Label	OperatorES, ESOff/ES1/ES2

Summary: Telephone Extension Status 1 and 2

Telephones	Single-line, analog multiline, MLX telephones
Mode	All
Programmable by	Users and system manager
Programming Code	ES1: *45 ES2: *44
Display Label	ES Status, ES1/ES2

Feature Button

Use in conjunction with features that require dial codes.

Summary: Feature Button

Telephones	Analog multiline
Mode	All
Programmable by	Users and system manager
Programming Code	*20
Display Label	Feature Btn

Forward

Assign a button to activate the forwarding of a user's calls to another extension or to an outside number.

Summary: Forward

Telephones	Single-line, analog multiline, MLX telephones (except QCC)
Mode	All
Programmable by	Users and system manager
Programming Code	*33
Display Label	Forward

Group Calling

Assign buttons to allow the calling group supervisor to monitor the number of calls in the queue or to change calling group members' availability to take calls.

Summary: Calls-In-Queue Alarm Button

Telephones	Analog multiline and MLX telephones
Mode	All
Programmable by	Users and system manager
Programming Code	*22 + *calling group ext. no.* + Enter
Display Label	Group Call

Summary: Calling Group Supervisor

Telephones	Analog multiline, MLX-28D, MLX-20L
Mode	All
Programmable by	Users and system manager
Programming Code	ES2, Available: *762 ES Off, Unavailable: *760
Display Label	OperatorES, ES2/ES Off

Summary: Calling Group Members

Telephones	Single-line, analog multiline, MLX telephones
Mode	All
Programmable by	Users and system manager
Programming Code	Sign-in, Available: *44 After-Call Work State, CMS only: *45
Display Label	ES Status, ES2/ES1

Group Page Auto Dial Button

Assign a button to allow the user to broadcast an announcement to individuals or groups using a speakerphone or loudspeaker.

Summary: Group Page Auto Dial button

Telephones	Analog multiline and MLX telephones
Mode	All
Programmable by	Users and system manager
Programming Code	**22 + paging group ext. no. +* Enter
Display Label	Group Page

Headset

Program headset buttons on MLX telephones only.

Summary: Headset Auto Answer

Assign a button to automatically answer a ringing call.

Telephones	MLX telephones only
Mode	All
Programmable by	Users and system manager
Programming Code	**780*
Display Label	Hdset Auto Answer

Summary: Headset Hang Up

Assign a button to disconnect a call.

Telephones	MLX telephones only
Mode	All
Programmable by	System manager only
Programming Code	**781*
Display Label	Hdset Hang Up

Summary: Headset Mute

Assign a button to turn microphone operation on or off for both headset and handset.

Telephones	MLX telephones only
Mode	All
Programmable by	Users and system manager
Programming Code	*783
Display Label	Hdset Mute

Summary: Headset Status

Assign a button to activate headset operation.

Telephones	MLX telephones only
Mode	All
Programmable by	Users and system manager
Programming Code	*782
Display Label	Hdset Status

Last Number Dial

Assign a button to redial the last number dialed.

Summary: Last Number Dial

Telephones	All
Mode	All
Programmable by	Users and system manager
Programming Code	*84
Display Label	LastNumDial

Messaging

Assign a button to allow users to send, receive, and post messages.

Summary: Leave Message After Calling

Telephones	Analog multiline and MLX telephones
Mode	All
Programmable by	Users and system manager
Programming Code	*25
Display Label	Leave Msg

Summary: Leave Message–Message LED Off

Telephones	Analog multiline and MLX telephones
Mode	All
Programmable by	Users and system manager
Programming Code	*54
Display Label	none

Summary: Posted Message

Telephones	Analog multiline and MLX telephones
Mode	All
Programmable by	Users and system manager
Programming Code	*751
Display Label	Posted Msg

Summary: Send/Remove Message

Telephones	DLC operator only
Mode	All
Programmable by	Users and system manager
Programming Code	*38
Display Label	Send/RmvMsg

Summary: Receiving Messages–Delete

Telephones	Analog multiline display only
Mode	All
Programmable by	Users and system manager
Programming Code	*26
Display Label	Messages Delete Msg

Summary: Receiving Messages–Next

Telephones	Analog multiline display only
Mode	All
Programmable by	Users and system manager
Programming Code	*28
Display Label	Messages Next Msg

Summary: Receiving Messages–Return Call

Telephones	Analog multiline display only
Mode	All
Programmable by	Users and system manager
Programming Code	*27
Display Label	Return Call

Summary: Receiving Messages–Scroll

Telephones	Analog multiline display only
Mode	All
Programmable by	Users and system manager
Programming Code	*29
Display Label	Scroll Msg

Night Service

Assign a button to activate telephone operation after normal business hours.

Summary: Night Service

Telephones	DLC operator only
Mode	All
Programmable by	Operators and system manager
Programming Code	*39
Display Label	Night Srvc

Notify

Assign buttons to allow users to send a visual signal to another extension without making a call to that extension.

Summary: Notify–Send and Receive

Telephones	Analog multiline and MLX telephones
Mode	All
Programmable by	Users and system manager
Programming Code	Send: *757 + *ext. no.* + Enter Receive: *758 + *ext. no.* + Enter
Display Label	Notify Send/Receive

Park

Assign a button to hold a call and allow the call to be picked up at any telephone in the system.

Summary: Park

Telephones	All (except single-line telephones in Behind Switch mode)
Mode	All
Programmable by	Users and system manager
Programming Code	*86
Display Label	Park

Park Zone Auto Dial

Assign a button to allow DLC operators to hold a call at a specified extension or park zone.

Summary: Park Zone Auto Dial

Telephones	DLC operator only
Mode	All
Programmable by	Users and system manager
Programming Code	**22 + Park Zone +* Enter
Display Label	Park Zone

Personal Speed Dial

Use this procedure to program codes that allow users to dial outside numbers by dialing a 2-digit code.

Summary: Personal Speed Dial

Telephones	Single-line, analog multiline, and telephones with 10 or fewer buttons
Mode	All
Programmable by	Users and system manager
Programming Code	*# + 2-digit code (01–24) + *21 + tel. no. + # +* Enter
Display Label	PerSpeedDl

Pickup

Assign buttons to allow users to answer calls that are ringing, parked, or on hold anywhere in the system.

Summary: Pickup–General Use, Specific Extension, Specific Line

Telephones	All
Mode	All
Programmable by	Users and system manager
Programming Code	General: *9 Specific line or ext.: *9 + *line no./ext. no.* + Enter Group: *88
Display Label	General Use, Specific Extension, Specific Line: Pickup General/Extension/Line Group: Pickup Group

Privacy

Assign a button to prevent other users from connecting to a call on this telephone.

Summary: Privacy

Telephones	All
Mode	All
Programmable by	Users and system manager
Programming Code	*31
Display Label	Privacy

Recall

Assign a button to send a switchhook flash.

Summary: Recall

Telephones	Analog multiline and MLX telephones
Mode	All
Programmable by	Users and system manager
Programming Code	*775
Display Label	Recall

Reminder Service

Assign buttons to allow the system to make calls automatically at preset times and cancel reminder service calls and operator reminder calls that were not answered.

Summary: Set, Cancel, or Missed Reminder Service

Telephones	All
Mode	All
Programmable by	Users and system manager
Programming Code	Set: *81 Cancel: **81 Missed: *752
Display Label	Reminder Set/Cancel/Missed

Ringing/Idle Line Preference

Use this procedure to turn on Ringing/Idle Line Preference.

Summary: Ringing and Idle Line Preference

Telephones	Analog multiline and MLX telephones
Mode	All
Programmable by	Users and system manager
Programming Code	On: *343 Off: *344
Display Label	Line Prefer, On/Off

Ringing Options

Summary: Personalized Ringing

Use this procedure to individualize the telephone ring.

Telephones	Analog multiline and MLX telephones
Mode	All
Programmable by	Users and system manager
Programming Code	*32 + *ring pattern (1–8)*
Display Label	Personal Ring Pattern #*n*

Summary: Ring Timing Options

Use this procedure to establish whether and how individual lines, or all lines, ring at a telephone.

Telephones	Analog multiline and MLX telephones
Mode	All
Programmable by	Users and system manager
Programming Code	Individual Lines: Immediate: *37 Delay: *36 No Ring: *35 All Lines: Immediate: *347 Delay: *346 No Ring: *345

Display Label	Individual Lines:
	`Ring Options One Line Immed/Delay/No Ring`
	
	All Lines:
	`Ring Options All Lines Immed/Delay/No Ring`

Summary: Abbreviated Ringing Options

Use this procedure to turn abbreviated ringing on or off.

Telephones	Analog multiline and MLX telephones
Mode	All
Programmable by	Users and system manager
Programming Code	On: *341 Off: *342
Display Label	`Ring Options Abbreviated On/Off`

Summary: Send Ringing Options

Override Delay Ring on an extension with **Shared SA** buttons.

Telephones	All
Mode	Hybrid/PBX
Programmable by	Users and system manager
Programming Code	On: *15 Off: **15
Display Label	`Shared SA Ring On/Off`

Saved Number Dial

Assign a button to selectively save the last number dialed and call that number again without manually redialing.

Summary: Saved Number Dial

Telephones	Analog multiline and MLX telephones
Mode	All
Programmable by	Users and system manager
Programming Code	*85
Display Label	SaveNumDial

Send/Remove Message

Assign a button to allow the system operator to turn the Message LED on or off for any telephone connected to the system.

Summary: Send/Remove Message

Telephones	DLC operator only
Mode	All
Programmable by	Users and system manager
Programming Code	*38
Display Label	Send/RmvMsg

Service Observing

Assign a button to allow a Service Observer to monitor calls at a specified station.

NOTE:
Service Observing may be subject to federal, state, or local laws, rules, or regulations or require the consent of one or both of the call parties. You must check in your jurisdiction and comply with all applicable laws, rules, and regulations before using this feature. Failure to comply may result in severe penalties.

Summary: Service Observing

Telephones	MLX telephones (except QCC or CTI link)
Mode	All
Programmable by	System manager only
Programming Code	*59 + *ext. no.*
Display Label	Service Observing: *nnnn*

Signaling

Assign a button to allow a user to send an audible signal to another extension without making a call to that extension.

Summary: Signaling (manual)

Telephones	Analog multiline and MLX telephones
Mode	All
Programmable by	Users and system manager
Programming Code	*23 + *ext. no.* + Enter
Display Label	Signal

System Access/Intercom Buttons

Assign Intercom or System Access buttons on telephones.

Summary: Assign System Access/Intercom Buttons

Telephones	All
Mode	Intercom buttons Key, Behind Switch System Access buttons Hybrid/PBX
Programmable by	System manager only
Programming Code	Intercom buttons: Assign Intercom Ring button: *16 Assign Intercom Originate Only button: *18 System Access buttons: Assign Ring button: *16 Assign Originate Only button: *18
Display Label	SysAccess/SysAcc-□□

Summary: Assign Shared System Access Buttons

Telephones	All
Mode	Hybrid/PBX
Programmable by	System manager only
Programming Code	**17 + primary ext. no.*
Display Label	ShareSysAcc

Summary: Change Type of System Access Button

Telephones	All
Mode	Intercom buttons: Key, Behind Switch System Access buttons: Hybrid/PBX
Programmable by	Users and system manager
Programming Code	Ring: **19 Voice: *19
Display Label	Voice Annce, Place Ring/Voice

System Speed Dial

Assign a button to dial any 3-digit speed dial code.

Summary: System Speed Dial

Telephones	All
Mode	All
Programmable by	Users and system manager
Programming Code	**24 + 3-digit code (600–729) +* Enter
Display Label	SysSpeedDl

Transfer

Assign a button to access the host system Transfer feature.

Summary: Transfer

Telephones	Analog multiline and MLX telephones
Mode	Behind Switch
Programmable by	Users and system manager
Programming Code	**774*
Display Label	Transfer

Voice Announce

Allow users to receive or prevent inside calls over their speakerphones when they are busy on another call.

Summary: Voice Announce

Telephones	Analog multiline and MLX telephones
Mode	All
Programmable by	Users and system manager
Programming Code	On: **10* Off: ***10*
Display Label	Voice Annce Receive On/Off

Customer Support Information

A

Support Telephone Number

In the USA only, Lucent Technologies provides a toll-tree customer Helpline (1 800 628-2888) 24 hours a day. If you need assistance when installing, programming, or using your system, call the Helpline or your Lucent Technologies representative. Consultation charges may apply.

Outside the USA, if you need assistance when installing, programming, or using your system, contact your Lucent Technologies representative.

Federal Communications Commission (FCC) Electromagnetic Interference Information

This equipment has been tested and found to comply with the limits for a Class A digital device, pursuant to Part 15 of the FCC Rules. These limits are designed to provide reasonable protection against harmful interference when the equipment is operated in a commercial environment. This equipment generates, uses, and can radiate radio frequency energy and, if not installed and used in accordance with the instruction manual, may cause harmful interference to radio communications. Operation of this equipment in a residential area is likely to cause harmful interference, in which case the user will be required to correct the interference at his or her own expense.

Canadian Department of Communications (DOC) Interference Information

This digital apparatus does not exceed the Class A limits for radio noise emissions set out in the radio interference regulations of the Canadian Department of Communications.

Le Présent Appareil Numérique n'émet pas de bruits radioélectriques dépassant les limites applicables aux appareils numériques de la classe A préscrites dans le règlement sur le brouillage radioélectrique edicté par le ministère des Communications du Canada.

FCC Notification and Repair Information

This equipment is registered with the FCC in accordance with Part 68 of its rules. In compliance with those rules, you are advised of the following:

- **Means of Connection.** Connection of this equipment to the telephone network shall be through a standard network interface jack, USOC RJ11C, RJ14C, RJ21X. Connection to E&M tie trunks requires a USOC RJ2GX. Connection to off-premises extensions requires a USOC RJ11C or RJ14C. Connection to 1.544-Mbps digital facilities must be through a USOC RJ48C or RJ48X. Connection to DID requires a USOC RJ11C, RJ14C, or RJ21X. These USOCs must be ordered from your telephone company. Connection to 56-Kbps or 64-Kbps facilities requires a USOC RJ11C, RJ14C, or RJ21.
- **Party Lines and Coin Telephones.** This equipment may not be used with party lines or coin telephone lines.
- **Notification of Local Telephone Company.** Before connecting this equipment, you or your equipment supplier must notify your local telephone company's business office of the following:
  - The telephone number(s) you will be using with this equipment
    - The appropriate registration number and ringer equivalence number (REN), which can be found on the back or bottom of the control unit, as follows:
    - If this equipment is to be used as a Key system, report the registration number AS593M-72914-KF-E.
    - If the system provides both manual and automatic selection of incoming/outgoing access to the network, report the registration number AS593M-72682-MF-E.
    - If there are no directly terminated trunks, or if the only directly terminated facilities are personal lines, report the registration number AS5USA-65646-PF-E.
    - The REN (Ringer Equivalence Number) for all three systems is 1.5A.

— The facility interface code (FIC) and service order code (SOC):

- For tie line connection, the FIC is TL31M and the SOC is 9.0F.
- For connection to off-premises stations, the FIC is OL13C and the SOC is 9.0F.
- For equipment to be connected to DID facilities, the FIC is 02RV2-T and the SOC is AS.2.
- For equipment to be connected to 1.544-Mbps digital service, the SOC is 6.0P and the FIC is:
  - 04DU9-BN for D4 framing format with AMI zero code suppression
  - 04DU9-DN for D4 framing format with bipolar 8 zero code suppression (B8ZS).04DU9-IKN for extended superframe format (ESF) with AMI zero code suppression
  - 04DU9-ISN with ESF and B8ZS
- For equipment to be connected to 56-Kbps or 64-Kbps digital facilities, the FIC is 021S5 and the SOC is 6.0Y.

— The quantities and USOC numbers of the jacks required

— For each jack, the sequence in which lines are to be connected, the line types, the FIC, and the REN by position when applicable

- **Ringer Equivalence Number (REN).** The REN is used to determine the number of devices that may be connected to the telephone line. Excessive RENs on the line may result in the devices not ringing in response to an incoming call. In most, but not all, areas the sum of the RENs should not exceed five (5.0). To be certain of the number of devices that may be connected to the line, as determined by the total RENs, contact the local telephone company to determine the maximum REN for the calling area.
- **Disconnection.** You must also notify your local telephone company if and when this equipment is permanently disconnected from the line(s).

Installation and Operational Procedures

The manuals for your system contain information about installation and operational procedures.

- **Repair Instructions.** If you experience trouble because your equipment is malfunctioning, the FCC requires that the equipment not be used and that it be disconnected from the network until the problem has been corrected. Repairs to this equipment can be made only by the manufacturers, their authorized agents, or others who may be authorized by the FCC. In the event repairs are needed on this equipment, contact your authorized Lucent Technologies dealer or, **in the USA only**, contact the National Service Assistance Center (NSAC) at 1 800 628-2888.
- **Rights of the Local Telephone Company.** If this equipment causes harm to the telephone network, the local telephone company may discontinue your service temporarily. If possible, they will notify you in advance. But if advance notice is not practical, you will be notified as soon as possible. You will also be informed of your right to file a complaint with the FCC.
- **Changes by the Local Telephone Company.** Your local telephone company may make changes in its facilities, equipment, operations, or procedures that affect the proper functioning of this equipment. If they do, you will be notified in advance to give you an opportunity to maintain uninterrupted telephone service.
- **Hearing Aid Compatibility.** The custom telephone sets for this system are compatible with inductively coupled hearing aids, as prescribed by the FCC.
- **Automatic Dialers.** WHEN PROGRAMMING EMERGENCY NUMBERS AND/OR MAKING TEST CALLS TO EMERGENCY NUMBERS:
  - Remain on the line and briefly explain to the dispatcher the reason for the call.
  - Perform such activities in off-peak hours, such as early morning or late evening.
- **Direct Inward Dialing** (DID). This equipment returns answer supervision signals to the PSTN when:
  - Answered by the called station
  - Answered by the attendant
  - Routed to a recorded announcement that can be administered by the customer premises equipment user
  - Routed to a dial prompt

This equipment returns answer supervision on all DID calls forwarded back to the PSTN. Permissible exceptions occur when:

— A call is unanswered

— A busy tone is received

— A reorder tone is received

Allowing this equipment to be operated in such a manner as not to provide proper answer supervision signaling is in violation of Part 68 FCC rules.

New Network Area and Exchange Codes. The MERLIN LEGEND Communications System software does not restrict access to any new area codes or exchange codes established by a local telephone company. If the user has established toll restrictions on the system that could restrict access, then the user should check the lists of allowed and disallowed dial codes and modify them as needed.

Equal Access Codes. This equipment is capable of providing users access to interstate providers of operator services through the use of access codes. Modification of this equipment by call aggregators to block access dialing codes is a violation of the Telephone Operator Consumers Act of 1990.

DOC Notification and Repair Information

NOTICE: The Canadian Department of Communications (DOC) label identifies certified equipment. This certification means that the equipment meets certain protective, operational, and safety requirements of the telecommunications network. The DOC does not guarantee the equipment will operate to the user's satisfaction.

Before installing this equipment, users should ensure that it is permissible to connect it to the facilities of the local telecommunications company. The equipment must also be installed using an acceptable method of connection. In some cases, the company's inside wiring for single-line individual service may be extended by means of a certified connector assembly (telephone extension cord). The customer should be aware that compliance with the above conditions may not prevent degradation of service in some situations.

Repairs to certified equipment should be made by an authorized Canadian maintenance facility designated by the supplier. Any repairs or alterations made by the user to this equipment, or any equipment malfunctions, may give the telecommunications company cause to request the user to disconnect the equipment.

Users should ensure for their own protection that the electrical ground connections of the power utility, telephone lines, and internal metallic water pipe system, if present, are connected. This precaution may be particularly important in rural areas.

CAUTION:
Users should not attempt to make such connections themselves, but should contact the appropriate electrical inspection authority or electrician, as appropriate.

To prevent overloading, the Load Number (LN) assigned to each terminal device denotes the percentage of the total load to be connected to a telephone loop used by the device. The termination on a loop may consist of any combination of devices, subject only to the requirement that the total of the Load Numbers of all the devices does not exceed 100.

DOC Certification No.: 230 4095A
CSA Certification No.: LR 56260
Load No.: 6

Renseignements sur la notification du ministère des Communications du Canada et la réparation

AVIS: L'étiquette du ministère des Communications du Canada identifie le matériel homologué. Cette étiquette certifie que le matériel est conforme à certaines normes de protection, d'exploitation et de sécurité des réseaux de télécommunications. Le Ministère n'assure toutefois pas que le matériel fonctionnera à la satisfaction de l'utilisateur.

Avant d'installer ce matériel, l'utilisateur doit s'assurer qu'il est permis de le raccorder aux installations de l'entreprise locale de télécommunication. Le matériel doit également être installé en suivant une méthode acceptée de raccordement. Dans certains cas, les fils intérieurs de l'enterprise utilisés pour un service individuel à ligne unique peuvent être prolongés au moyen d'un dispositif homologué de raccordement (cordon prolongateur téléphonique interne). L'abonné ne doit pas oublier qu'il est possible que la conformité aux conditions énoncées ci-dessus n'empêchent pas la dégradation du service dans certaines situations. Actuellement, les entreprises de télécommunication ne permettent pas que l'on raccorde leur matériel à des jacks d'abonné, sauf dans les cas précis prévus pas les tarifs particuliers de ces entreprises.

Les réparations de matériel homologué doivent être effectuées par un centre d'entretien canadien autorisé désigné par le fournisseur. La compagnie de télécommunications peut demander à l'utilisateur de débrancher un appareil à la suite de réparations ou de modifications effectuées par l'utilisateur ou à cause de mauvais fonctionnement.

Pour sa propre protection, l'utilisateur doit s'assurer que tous les fils de mise à la terre de la source d'énergie électrique, des lignes téléphoniques et des canalisations d'eau métalliques, s'il y en a, sont raccordés ensemble. Cette précaution est particuliérement importante dans les régions rurales.

AVERTISSEMENT: L'utilisateur ne doit pas tenter de faire ces raccordements lui-même; il doit avoir recours à un service d'inspection des installations électriques, ou à un électricien, selon le cas.

L'indice de charge (IC) assigné à chaque dispositif terminal indique, pour éviter toute surcharge, le pourcentage de la charge totale qui peut être raccordée à un circuit téléphonique bouclé utilisé par ce dispositif. La terminaison du circuit bouclé peut être constituée de n'importe quelle combinaison de dispositifs, pourvu que la somme des indices de charge de l'ensemble des dispositifs ne dépasse pas 100.

No d'homologation: 230 4095A
No de certification: CSA LR 56260
L'indice de charge: 6

MERLIN LEGEND D.O.C. Location Label Placement

Ministère des Communications du Canada emplacement de l'étiquette

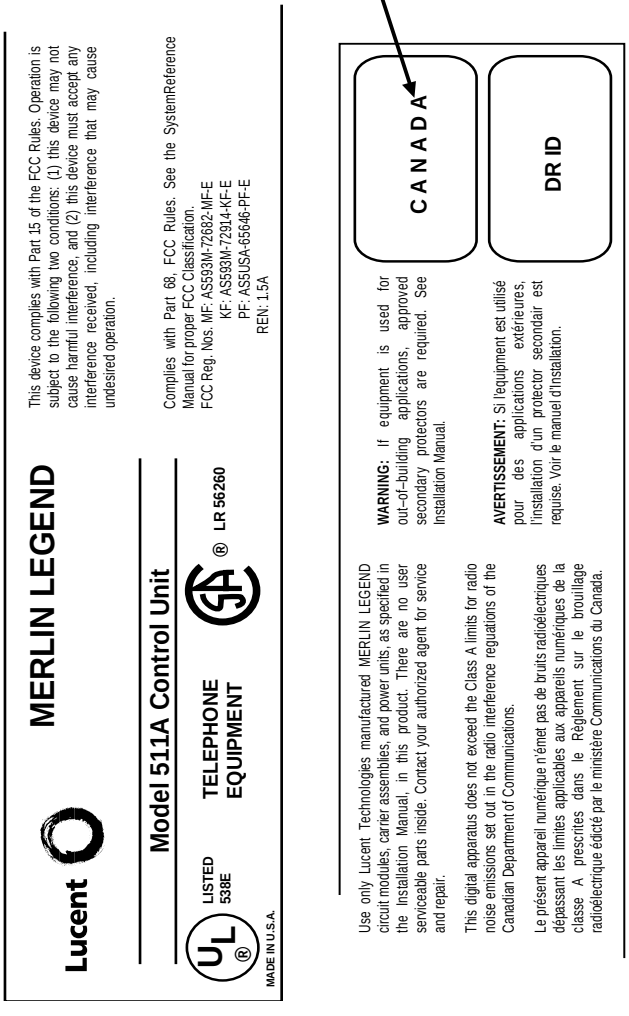

Security of Your System: Preventing Toll Fraud

As a customer of a new telephone system, you should be aware that there is an increasing problem of telephone toll fraud. Telephone toll fraud can occur in many forms, despite the numerous efforts of telephone companies and telephone equipment manufacturers to control it. Some individuals use electronic devices to eliminate or falsify records of these calls. Others charge calls to someone else's number by illegally using lost or stolen calling cards, billing innocent parties, clipping on to someone else's line, or breaking into someone else's telephone equipment physically or electronically. In certain instances, unauthorized individuals make connections to the telephone network through the use of the Remote Access features of your system.

The Remote Access features of your system, if you choose to use them, permit off-premises callers to access the system from a remote telephone by using a telephone number with or without a barrier code. The system returns an acknowledgment signaling the user to key in his or her barrier code, which is selected and administered by the system manager. After the barrier code is accepted, the system returns dial tone to the user. In Release 3.1 and later systems, barrier codes are by default restricted from making outside calls. In prior releases, if you do not program specific outward calling restrictions, the user is able to place any call normally dialed from a telephone associated with the system. Such an off-premises network call is originated at, and will be billed from, the system location.

The Remote Access feature, as designed, helps the customer, through proper administration, to minimize the ability of unauthorized persons to gain access to the network. Most commonly, phone numbers and codes are compromised when overheard in a public location, through theft of a wallet or purse containing access information, or through carelessness (for example, writing codes on a piece of paper and improperly discarding it). Additionally, hackers may use a computer to dial an access code and then publish the information to other hackers. Enormous charges can be run up quickly. It is the customer's responsibility to take the appropriate steps to properly implement the features, evaluate and administer the various restriction levels, protect access codes, and distribute access codes only to individuals who have been fully advised of the sensitive nature of the access information.

Common carriers are required by law to collect their tariffed charges. While these charges are fraudulent charges made by persons with criminal intent, applicable tariffs state that the customer of record is responsible for payment of all long-distance or other network charges. Lucent Technologies cannot be responsible for such charges and will not make any allowance or give any credit for charges that result from unauthorized access.

To minimize the risk of unauthorized access to your communications system:

- Use an unpublished Remote Access number.
- Assign access codes randomly to users on a need-to-have basis, keeping a log of *all* authorized users and assigning one code to one person.
- Use random-sequence access codes, which are less likely to be easily broken.
- Use the longest-length access codes the system allows.
- Deactivate all unassigned codes promptly.
- Ensure that Remote Access users are aware of their responsibility to keep the telephone number and any access codes secure.
- When possible, restrict the off-network capability of off-premises callers, using calling restrictions, Facility Restriction Levels (FRLs) (Hybrid/PBX mode only), and Disallowed List capabilities. In Release 3.1 and later systems, a prepared Disallowed List (number 7) is provided and is designed to prevent the types of calls that toll-fraud abusers often make.
- When possible, block out-of-hours calling.
- Frequently monitor system call detail reports for quicker detection of any unauthorized or abnormal calling patterns.
- Limit Remote Call Forwarding to persons on a need-to-have basis.
- Change access codes every 90 days.
- Use the longest-length barrier codes possible, following the guidelines for passwords. (See See “Choosing Passwords” on page 19.)

Toll Fraud Prevention

Toll fraud is the unauthorized use of your telecommunications system by third parties to make long-distance telephone calls. Under the law, you, the customer, are responsible for paying part or all of those unauthorized calls. Thus, the following information is of critical importance.

Unauthorized persons concentrate their activities in two areas with the MERLIN LEGEND Communications System:

- They try to transfer out of the MERLIN LEGEND Communications System to gain access to an outgoing trunk and make long-distance calls.
- They try to locate unused or unprotected mailboxes and use them as drop-off points for their own messages.

The following is a discussion of how toll fraud is often perpetrated and ways to prevent unauthorized access that can lead to toll fraud.

Physical Security, Social Engineering, and General Security Measures

Criminals called *hackers* may attempt to gain unauthorized access to your communications system and voice messaging system in order to use the system features. Hackers often attempt to trick employees into providing them with access to a network facility (line/trunk) or a network operator. This is referred to as social engineering. Hackers may pose as telephone company employees and employees of Lucent Technologies or your authorized dealer. Hackers will go through a company's trash to find directories, dialing instructions, and other information that will enable them to break into the system. The more knowledgeable they appear to be about the employee names, departments, telephone numbers, and the internal procedures of your company, the more likely it is that they will be able to trick an employee into helping them.

Preventive Measures

Take the following preventive measures to limit the risk of unauthorized access by hackers:

- Provide good physical security for the room containing your telecommunications equipment and the room with administrative tools, records, and system manager information. These areas should be locked when not attended.
- Provide a secure trash disposal for all sensitive information, including telephone directories, call accounting records, or anything that may supply information about your communications system. This trash should be shredded.
- Educate employees that hackers may try to trick them into providing them with dial tone or dialing a number for them. All reports of trouble, requests for moving extensions, or any other administrative details associated with the MERLIN LEGEND Communications System should be handled by one person (the system manager) or within a specified department. *Anyone claiming to be a telephone company representative should be referred to this person or department.*
- No one outside of Lucent Technologies needs to use the MERLIN LEGEND Communications System to test facilities (lines/trunks). If a caller identifies him- or herself as a Lucent Technologies employee, the system manager should ask for a telephone number where the caller can be reached. The system manager should be able to recognize the number as a Lucent Technologies telephone number. *Before connecting the caller to the administrative port of the MERLIN LEGEND Communications System, the system manager should feel comfortable that a good reason to do so exists*. In any event, it is not advisable to give anyone access to network facilities or operators, or to dial a number at the request of the caller.
- Any time a call appears to be suspicious, call the Lucent Technologies BCS Fraud Intervention Center at 1 800 628-2888 (fraud intervention for System 25, PARTNER® and MERLIN systems).

- Customers should also take advantage of Lucent Technologies monitoring services and devices, such as the NetPROTECT[SM] family of fraud-detection services, CAS with HackerTracker®, and CAT Terminal with Watchdog. Call 1 800 638-7233 to get more information on these Lucent Technologies fraud detection services and products.

Security Risks Associated with Transferring through Voice Messaging Systems

Toll fraud hackers try to dial into a voice mailbox and then execute a transfer by dialing *T. The hacker then dials an access code (either 9 for Automatic Route Selection or a pooled facility code) followed by the appropriate digit string to either direct dial or access a network operator to complete the call.

NOTE:
In Release 3.1 and later systems, all extensions are initially and by default restricted from dial access to pools. In order for an extension to use a pool to access an outside line/trunk, this restriction must be removed.

Preventive Measures

Take the following preventive measures to limit the risk of unauthorized transfers by hackers:

- Outward restrict all MERLIN LEGEND Communications System voice mail port extension numbers. This denies access to facilities (lines/trunks). In Release 3.1 and later systems, voice mail ports are by default outward restricted.
- As an additional security step, network dialing for all extensions, including voice mail port extensions, should be processed through ARS using dial access code 9.

SECURITY ALERT:
The MERLIN LEGEND Communications System ships with ARS activated with all extensions set to FRL 3, allowing all international calling. ***To prevent toll fraud****, ARS FRLs should be established using:*

- *FRL 0 for restriction to internal dialing only*
- *FRL 2 for restriction to local network calling only*
- *FRL 3 for restriction to domestic long-distance (excluding area code 809 for the Dominican Republic as this is part of the North American Numbering Plan, unless 809 is required)*
- *FRL 4 for international calling*

- *In Release 3.1 and later systems, default local and default toll tables are factory-assigned an FRL of 2. This simplifies the task of restricting extensions: the FRL for an extension merely needs to be changed from the default of 3.*
- *Each extension should be assigned the appropriate FRL to match its calling requirements. All voice mail port extensions not used for Outcalling should be assigned to FRL 0 (the default setting in Release 3.1 and later).*

- Deny access to pooled facility codes by removing pool dial-out codes 70, 890-899, or any others on your system.
- Create a Disallowed List or use the pre-prepared Disallowed List number 7 (Release 3.1 and later systems only) to disallow dialing 0, 11, 10, 1700, 1809, 1900, and 976 or 1(wildcard)976. In Release 3.1 and later systems, Disallowed List number 7 does not include 800 and 1800 and 411 and 1411, but Lucent Technologies recommends that you add them. **Assign all voice mail port extensions to this Disallowed List. Lucent Technologies recommends assigning Disallowed List number 7. *This is an added layer of security, in case outward restriction is inadvertently removed.*** (In Release 3.1 and later systems, voice messaging ports are assigned by default to Disallowed List number 7.)

If Outcalling is required by voice messaging system extensions:

- Program an ARS FRL of 2 on voice mail port extension(s) used for Outcalling.
- If 800 and 411 numbers are used, remove 1800, 800, 411, and 1411 from Disallowed List number 7.
- If Outcalling is allowed to long-distance numbers, build an Allowed List for the voice mail port extension(s) used for Outcalling. This list should contain the area code and the first three digits of the local exchange telephone numbers to be allowed.

Additional general security for voice messaging systems:

- Use a secure password for the General Mailboxes.
- The default administration mailbox, 9997, must be reassigned to the system manager’s mailbox/extension number and securely password protected.
- All voice messaging system users must use secure passwords known only to the user.

Security Risks Associated with the Automated Attendant Feature of Voice Messaging Systems

Two areas of toll fraud risk associated with the Automated Attendant feature of voice messaging systems are the following:

- Pooled facility (line/trunk) access codes are translated to a menu prompt to allow Remote Access. If a hacker finds this prompt, the hacker has immediate access. (In Release 3.1 and later systems, dial access to pools is initially factory-set to restrict all extensions: to allow pool access, this restriction must be removed by the system manager.)
- If the Automated Attendant prompts callers to use Remote Call Forwarding (RCF) to reach an outside telephone number, the system may be susceptible to toll fraud. An example of this application is a menu or submenu that says, “To reach our answering service, select prompt number 5,” and transfers a caller to an external telephone number.

  Remote Call Forwarding can be used securely only when the central office provides “reliable disconnect” (sometimes referred to as forward disconnect or disconnect supervision), which guarantees that the central office does not return a dial tone after the called party hangs up. In most cases, the central office facility is a loop-start line/trunk which does not provide reliable disconnect. When loop-start lines/trunks are used, if the calling party stays on the line, the central office does return a dial tone at the conclusion of the call, enabling the caller to place another call as if it were being placed from your company. Ground-start trunks provide reliable disconnect and should be used whenever possible.

Preventive Measures

Take the following preventive measures to limit the risk of unauthorized use of the Automated Attendant feature by hackers:

- *Do not* use Automated Attendant prompts for ARS Codes or Pooled Facility Codes.
- Assign all unused Automated Attendant Selector Codes to zero, so that attempts to dial these are routed to the system attendant.
- If Remote Call Forwarding (RCF) is required, MERLIN LEGEND Communications System owners should coordinate with their Lucent Technologies Account Team or authorized dealer to verify the type of central office facility used for RCF. If it is a ground-start line/trunk, or if it is a loop-start line/trunk and central office reliable disconnect can be ensured, then nothing else needs to be done.

NOTE:
In most cases these are loop-start lines/trunks without reliable disconnect. The local telephone company must be involved in order to change the facilities used for RCF to ground start lines/trunks. Usually a charge applies for this change. Also, hardware and software changes may be necessary in

the MERLIN LEGEND Communications System. The *MERLIN MAIL* MERLIN and *MERLIN LEGEND* MAIL Automated Attendant feature merely accesses the RCF feature in the MERLIN LEGEND Communications System. Without these changes being made, this feature is highly susceptible to toll fraud. These same preventive measures must be taken if the RCF feature is active for MERLIN LEGEND Communications System extensions whether or not it is accessed by an Automated Attendant menu.

Security Risks Associated with the Remote Access Feature

Remote Access allows the MERLIN LEGEND Communications System owner to access the system from a remote telephone and make an outgoing call or perform system administration, using the network facilities (lines/trunks) connected to the MERLIN LEGEND Communications System. Hackers, scanning the public switched network by randomly dialing numbers with war dialers (a device that randomly dials telephone numbers, including 800 numbers, until a modem or dial tone is obtained), can find this feature, which will return a dial tone to them. They can even employ war dialers to attempt to discover barrier codes.

Preventive Measures

Take the following preventive measures to limit the risk of unauthorized use of the MERLIN LEGEND Communications System Remote Access feature by hackers:

- The Remote Access feature can be abused by criminal toll fraud hackers, if it is not properly administered. Therefore, this feature should not be used unless there is a strong business need.
- It is strongly recommended that customers invest in security adjuncts, which typically use one-time passcode algorithms. These security adjuncts discourage hackers. Since a secure use of the Remote Access feature generally offers savings over credit-card calling, the break-even period can make the investment in security adjuncts worthwhile.
- If a customer chooses to use the Remote Access feature without a security adjunct, then multiple barrier codes should be employed, with one per user if the system permits. The MERLIN LEGEND Communications System permits a maximum of 16 barrier codes.
- The maximum length should be used for each barrier code, and should be changed periodically. Barrier codes, like passwords, should consist of a random, hard-to-guess sequence of digits. While MERLIN LEGEND Communications System Release 3.0 permits a barrier code of up to 11 digits, systems prior to Release 3.0 permit barrier codes of up to only four digits.

If Remote Access is used, an upgrade to MERLIN LEGEND Communications System Release 3.0 is encouraged to take advantage of the longer barrier code.

Other Security Hints

Make sure that the Automated Attendant Selector Codes do not permit outside line selection.

Multiple layers of security are always recommended to keep your system secure.

Following are a number of measures and guidelines that can help you ensure the security of your communications system and voice messaging system.

Educating Users

Everyone in your company who uses the telephone system is responsible for system security. Users and attendants/operators need to be aware of how to recognize and react to potential hacker activity. Informed people are more likely to cooperate with security measures that often make the system less flexible and more difficult to use.

- Never program passwords or authorization codes onto Auto Dial buttons. Display telephones reveal the programmed numbers and internal abusers can use the Auto Dial buttons to originate unauthorized calls.
- Discourage the practice of writing down barrier codes or passwords. If a barrier code or password needs to be written down, keep it in a secure place and never discard it while it is active.
- Instruct operators and attendants to tell their system manager when they answer a series of calls where there is silence on the other end or the caller hangs up.
- Advise users who are assigned voice mailboxes to frequently change personal passwords and not to choose obvious passwords.
- Ensure that the system manager advises users with special telephone privileges (such as Remote Access, Outcalling, and Remote Call Forwarding) of the potential risks and responsibilities.
- Be suspicious of any caller who claims to be with the telephone company and wants to check an outside line. Ask for a callback number, hang up, and confirm the caller’s identity.
- Never distribute the office telephone directory to anyone outside the company; be careful when discarding it (shred the directory).
- Never accept collect telephone calls.
- Never discuss your telephone system’s numbering plan with anyone outside the company.

Educating Operators

Operators and attendants need to be especially aware of how to recognize and react to potential hacker activity. To defend against toll fraud, operators should follow the guidelines below:

- Establish procedures to counter *social engineering*. Social engineering is a con game that hackers frequently use to obtain information that may help them gain access to your communications system or voice messaging system.
- When callers ask for assistance in placing outside or long-distance calls, ask for a callback extension.
- Verify the source. Ask callers claiming to be maintenance or service personnel for a callback number. Never transfer to *10 without this verification. Never transfer to extension 900.
- Remove the headset and/or handset when the console is not in use.

Detecting Toll Fraud

To detect toll fraud, users and operators should look for the following:

- Lost voice mail messages, mailbox lockout, or altered greetings
- Inability to log into voice mail
- Inability to get an outside line
- Foreign language callers
- Frequent hang-ups
- Touch-tone sounds
- Caller or employee complaints that the lines are busy
- Increases in internal requests for assistance in making outbound calls (particularly international calls or requests for dial tone)
- Outsiders trying to obtain sensitive information
- Callers claiming to be the “phone” company
- Sudden increase in wrong numbers

Establishing a Policy

As a safeguard against toll fraud, follow these guidelines for your MERLIN LEGEND Communications System and voice messaging system:

- Change passwords frequently (at least quarterly). Changing passwords routinely on a specific date (such as the first of the month) helps users to remember to do so.
- Always use the longest-length password allowed.
- Establish well-controlled procedures for resetting passwords.
- Limit the number of invalid attempts to access a voice mailbox to five or less.
- Monitor access to the MERLIN LEGEND Communications System dial-up maintenance port. Change the access password regularly and issue it only to authorized personnel. Disconnect the maintenance port when not in use. (However, this eliminates Lucent Technologies' 24-hour maintenance surveillance capability and may result in additional maintenance costs.)
- Create a communications system management policy concerning employee turnover and include these suggestions:
  - Delete all unused voice mailboxes in the voice mail system.
  - If a terminated employee had Remote Access calling privileges and a personal authorization code, remove the authorization code immediately.
  - If barrier codes and/or authorization codes were shared by the terminated employee, these should be changed immediately.
- Regularly back up your MERLIN LEGEND Communications System files to ensure a timely recovery should it be required. Schedule regular, off-site backups.
- Keep the Remote Maintenance Device turned off when not in use by Lucent Technologies or your authorized dealer.
- Limit transfers to registered subscribers only.
- Use the Security Violations Notification options (Mailbox Lock or Warning Message) to alert you of any mailbox break-in attempts. Investigate all incidents.
- Review security policies and procedures and keep them up-to-date.

Choosing Passwords

Passwords should be the maximum length allowed by the system.

Passwords should be hard to guess and should ***not*** contain:

- All the same numbers (for example, 1111, 666666)
- Sequential characters (for example 123456)
- Numbers that can be associated with you or your business, such as your name, birthday, business name, business address, telephone number, or social security number.
- Words or commonly used names.

Passwords should be changed regularly, at least on a quarterly basis. Recycling old passwords is not recommended. Never program passwords (or authorization codes or barrier codes) onto a speed dial button.

Improving Physical Security

You should always limit access to the system console (or attendant console) and supporting documentation. The following are some recommendations:

- Keep the system console and supporting documentation in an office that is secured with a changeable combination lock. Provide the combination only to those individuals having a real need to enter the office.
- Keep telephone wiring closets and equipment rooms locked.
- Keep telephone logs and printed reports in locations that only authorized personnel can enter.
- Design distributed reports so they do not reveal password or trunk access code information.
- Keep the voice messaging system Remote Maintenance Device turned off.

Limiting Outcalling

When Outcalling is used to contact subscribers who are off-site, use the MERLIN LEGEND Communications System Allowed Lists and Disallowed Lists or Automatic Route Selection features to minimize toll fraud.

If the Outcalling feature will not be used, outward restrict all voice messaging system ports. If Outcalling will be used, ports not used for Outcalling should be Outward Restricted (for MERLIN MAIL Voice Messaging Systems, port 2 on a 2-port system, port 4 on a 4-port system, ports 5 and 6 on a 6-port system; for MERLIN LEGEND MAIL Voice Messaging Systems, port 7 of the system's module). Use Outward Restriction, Toll Restrictions, Allowed Lists, Disallowed Lists and Facility Restrictions Levels, as appropriate, to minimize the possibility of toll fraud.

Limited Warranty and Limitation of Liability

Lucent Technologies warrants to you, the customer, that your MERLIN LEGEND Communications System will be in good working order on the date Lucent Technologies or its authorized reseller delivers or installs the system, whichever is later (“Warranty Date”). If you notify Lucent Technologies or its authorized reseller within one year of the Warranty Date that your system is not in good working order, Lucent Technologies will without charge to you repair or replace, at its option, the system components that are not in good working order. Repair or replacement parts may be new or refurbished and will be provided on an exchange basis. If Lucent Technologies determines that your system cannot be repaired or replaced, Lucent Technologies will remove the system and, at your option, refund the purchase price of your system, or apply the purchase price towards the purchase of another Lucent Technologies system.

If you purchased your system directly from Lucent Technologies, Lucent Technologies will perform warranty repair in accordance with the terms and conditions of the specific type of Lucent Technologies maintenance coverage you selected. If you purchased your system from a Lucent Technologies-authorized reseller, contact your reseller for the details of the maintenance plan applicable to your system.

This Lucent Technologies limited warranty covers damage to the system caused by power surges, including power surges due to lightning.

The following will not be deemed to impair the good working order of the system, and Lucent Technologies will not be responsible under the limited warranty for damages resulting from:

- Failure to follow Lucent Technologies’ installation, operation, or maintenance instructions
- Unauthorized system modification, movement, or alteration
- Unauthorized use of common carrier communications services accessed through the system
- Abuse, misuse, or negligent acts or omissions of the customer and persons under the customer’s control
- Acts of third parties and acts of God

LUCENT TECHNOLOGIES’ OBLIGATION TO REPAIR, REPLACE, OR REFUND AS SET FORTH ABOVE IS YOUR EXCLUSIVE REMEDY.

EXCEPT AS SPECIFICALLY SET FORTH ABOVE, LUCENT TECHNOLOGIES, ITS AFFILIATES, SUPPLIERS, AND AUTHORIZED RESELLERS MAKE NO WARRANTIES, EXPRESS OR IMPLIED, AND SPECIFICALLY DISCLAIM ANY WARRANTIES OF MERCHANTABILITY OR FITNESS FOR A PARTICULAR PURPOSE.

Limitation of Liability

Except as provided below, the liability of Lucent Technologies and its affiliates and suppliers for any claims, losses, damages, or expenses from any cause whatsoever (including acts or omissions of third parties), regardless of the form of action, whether in contract, tort, or otherwise, shall not exceed the lesser of: (1) the direct damages proven; or (2) the repair cost, replacement cost, license fee, annual rental charge, or purchase price, as the case may be, of the equipment that gives rise to the claim. Except as provided below, Lucent Technologies and its affiliates and suppliers shall not be liable for any incidental, special, reliance, consequential, or indirect loss or damage incurred in connection with the equipment. As used in this paragraph, consequential damages include, but are not limited to, the following: lost profits, lost revenues, and losses arising out of unauthorized use (or charges for such use) of common carrier telecommunications services or facilities accessed through or connected to the equipment. For personal injury caused by Lucent Technologies's negligence, Lucent Technologies's liability shall be limited to proven damages to person. **No action or proceeding against Lucent Technologies or its affiliates or suppliers may be commenced more than twenty-four (24) months after the cause of action accrues**. THIS PARAGRAPH SHALL SURVIVE FAILURE OF AN EXCLUSIVE REMEDY.

Remote Administration and Maintenance

The Remote Administration and Maintenance feature of your telecommunications system, if you choose to use it, permits users to change the system features and capabilities from a remote location.

The Remote Administration and Maintenance feature, through proper administration, can help you reduce the risk of unauthorized persons gaining access to the network. However, telephone numbers and access codes can be compromised when overheard in a public location, or lost through theft of a wallet or purse containing access information or through carelessness (for example, writing codes on a piece of paper and improperly discarding them). Additionally, hackers may use a computer to dial an access code and then publish the information to other hackers. Substantial charges can accumulate quickly. It is your responsibility to take appropriate steps to implement the features properly, evaluate and administer the various restriction levels, and protect and carefully distribute access codes.

Under applicable tariffs, you will be responsible for payment of toll charges. Lucent Technologies cannot be responsible for such charges and will not make any allowance or give any credit resulting from unauthorized access.

To reduce the risk of unauthorized access through Remote Administration and Maintenance, please observe the following procedures:

- The System Administration and Maintenance capability of a Hybrid/PBX or Key system is protected by a password.
  - Change the default password immediately.
  - Continue to change the password regularly.
  - Give the password only to people who need it and impress upon them the need to keep it secret.
  - If anyone who knows the password leaves the company, change the password immediately.
- If you have a special telephone line connected to your Hybrid/PBX or Key system for Remote Administration and Maintenance, you should do one of the following:
  - Unplug the line when it is not being used.
  - Install a switch in the line to turn it off when it is not being used.
  - Keep the Remote Administration and Maintenance telephone number secret. Give it only to people who need to know it, and impress upon them the need to keep it a secret. Do not write the telephone number on the Hybrid/PBX or Key system, the connecting equipment, or anywhere else in the system room.

If your Remote Administration and Maintenance feature requires that someone in your office transfer the caller to the Remote Administration and Maintenance extension, you should impress upon your employees the importance of transferring only authorized individuals to that extension.

Menu Hierarchy

B

The system programming menu hierarchy details the sequence of menu screens that appear when you select the system programming options. The choice of an option on the first menu screen leads to either a second menu screen or a data-entry screen. A secondary menu screen may lead to still another menu screen, and so on up to six screens, as shown in the following pages.

You can use the Inspect feature of system programming to display the telephone or line/trunk numbers that are programmed with a specific feature. Inspect is helpful when you must assign a feature to many lines/trunks or extensions and you do not have a Direct Station Selector (DSS) attached to the system programming console, or when you are programming using a PC with SPM.

Inspect can be used with the menu options on the following pages that have an asterisk (*) next to them. To use Inspect in system programming, choose an eligible option from the programming menu, and press **Inspct** or PgDn.

LED Displays

C

Table C–1 defines LED status on the MLX-20L console. LED status is indicated on the LEDs next to the 20 buttons below the display area on the system programming console. LED status is simulated on the computer screen when you use SPM.

Table C–2 defines LED status on the DSS console. LED status is indicated on the red LED next to the 50 extension buttons.

Table C–1. Line or Trunk Feature Status for MLX-20L Console

System Programming Menu Option	Option	LED Status*					
		Green LED			Red LED		
		ON	OFF	FLASHING	ON	OFF	FLASHING
Lines Trunks	Tie Lines						
	Inmode	Incoming tie line is touch-tone	Incoming tie line is rotary dial†				
	Outmode	Outgoing tie line is touch-tone	Outgoing tie line is rotary dial†				
	Dialtone	Remote dial tone†	Local dial tone				
Lines Trunks	TT/LS Disc						
	Outmode	Line/Trunk is touch-tone†	Line/trunk is rotary dial				
Lines Trunks	Pools				Trunk is in pool	Trunk is not in pool	
Lines Trunks	Toll Type	Must dial 1 + area code†	1 + dialing is not needed				
Lines Trunks	Hold Disconct	Long-450 ms†	Short-50 ms				
Lines Trunks	LS-ID Delay	LS-ID Delay is on	LS-ID Delay is off†				
Extensions	Lines Trunks	Line/trunk or pool is assigned to button	Line/trunk or pool is not assigned to button		Trunk is assigned to a pool		

* LED Status is indicated on LEDs next to the 20 buttons below the display area of the system programming console, or simulated on the computer screen when using SPM.

† This is the factory setting.

Table C–2. Telephone Feature Status for DSS Console Only

System Programming Menu Option	Option	Red LED Status			
		ON	OFF	FLASHING	WINK
Extensions	Account (FACE)	Forced Account Code Entry assigned	Forced Account Code Entry not assigned†		
Extensions	BIS/HFAI	Telephone has BIS/HFAI ability (factory setting analog multiline telephones)	Other		
Extensions	Call Pickup	Telephone is assigned to Call Pickup Group	Telephone is not assigned to Call Pickup Group†		
Extensions	VoiceSignl	Voice Announce to Busy assigned	Voice Announce to Busy not assigned†		
Extensions	Ext Status	Extension Status assigned	Extension Status not assigned	Extension Status can be assigned	
Extensions	Group Page	Telephone is in group	Telephone is not in group†		
Extensions	Group Cover	Telephone is in coverage group	Telephone is not in coverage group†		
Extensions	Group Calling Members	Telephone is assigned to group	Telephone is not assigned to group†		
Extensions	Mic Disable	Telephone microphone is disabled	Telephone microphone is enabled		
Extensions	Remote Frwd	Telephone can transfer calls to remote phone number	Telephone cannot transfer calls to remote phone number†		

† This is the factory setting.

Continued on next page

Table C–2. Telephone Feature Status for DSS Console Only *(Continued)*

System Programming Menu Option	Option	Red LED Status			
		ON	OFF	FLASHING	WINK
Night Service	Group Assign	Telephone is in group	Telephone not in group†		
Night Service	Exclude List	Telephone is excluded	Telephone is not excluded†		
Aux Equip	Msg Waiting	A fax message-waiting extension	Not a fax message-waiting extension		
Aux Equip	Fax Extension	Extension is a fax machine	Extension not a fax machine		
Tables	AllowTo	Allowed List assigned to telephone	Allowed List not assigned to telephone†		
Tables	DisallowTo	Disallowed List assigned	Disallowed List not assigned†		
Data	Voice/Data	Voice/Data pair	Not Voice/Data pair†		
Operator	Direct Trunk Queued Call	Operator position	Other	Can be assigned as operator position	
Operator	Queued Call Message Center	Message Center position	Other	Can be assigned as Message Center	
Operator	In Queue Alert	Position receives In-Queue Alert for Thresh. 3	Other	Position receives In-Queue Alert for Thresh. 1	Position receives In-Queue Alert for Thresh. 2

† This is the factory setting.

General Feature Use and Telephone Programming

D

This appendix contains information on the general use of features for the MLX, analog multiline, and single-line telephones. It covers telephone and operator features and the acceptable programming codes for each. It also describes how to program these features on MLX and analog multiline telephones.

General Feature Use Information

The following sections provide general instructions for feature use on MLX, analog multiline, and single-line telephones. Features can be used in the following ways:

- Press a dedicated feature button.
- Press a programmed button.

Fixed Features

All multiline telephones have a group of dedicated (or fixed) feature buttons that are programmed and labeled at the factory. The functions of these buttons, which include **Conf**, **Transfer**, and **Speaker**, cannot be changed. Press the button for the feature you want to use.

Programmed Buttons

Any unlabeled line button on multiline telephones can be programmed with a feature for one-touch activation. See Tables D–1 through D–4 for additional information about programming features onto line buttons.

Some features, such as Auto Dial, must be programmed onto line buttons in order to function. Other features, such as Privacy, are best used if programmed onto line buttons—the LED next to the line button provides visual indication that the feature is in use. The following features *must* be programmed onto line buttons:

- Auto Answer All
- Auto Answer Headset
- Auto Dial
- Barge-In
- Coverage
  - Group Coverage
  - Primary Coverage
  - Secondary Coverage
  - Coverage Off
  - Coverage VMS Off
- Do Not Disturb
- Extension Status—Agent Login/Logout
- Feature Button (analog multiline telephones only)
- Headset/Handset Mute
- Headset Status
- Headset Hang Up
- Notify
- Posted Message (available from display on MLX display telephones)
- Saved Number Dial
- Service Observing
- Signal

Feature Codes

Feature codes are 1-, 2-, and 3-digit codes that activate features. A feature code is used by first pressing the dedicated **Feature** button on MLX telephones, pressing a programmed Feature button on analog multiline telephones, or dialing # on single-line telephones. Each of these methods sends a signal to the system that a feature code is about to be dialed. When the code is dialed, the feature is activated.

NOTE:
Queued Call Console (QCC) system operators cannot use feature codes.

The following features can be used only by dialing feature codes:

- Pickup
- Forward/Follow Me—Cancel One
- Forward/Follow Me—Cancel All
- Message Cancel
- Personal Speed Dial
- System Speed Dial

NOTE:
Pressing the **Conf**, **Transfer**, **Speaker**, or **Feature** button while activating a feature cancels the process. Pressing any other button, such as the **Mute, HFAI**, **Message Status**, DSS **Page**, **More**, **Message**, **Clock**, analog multiline display keys, or analog multiline disconnect button does not cancel the feature-activating process.

Telephone and Operator Features

Table D–1 lists the telephone and operator features that can be assigned to telephones or consoles, either through centralized telephone programming or by users from their telephones.

Table D–1. Telephone and Operator Features

Feature	Prog Code	Feature Code	2-Line Display	7-Line Display	MLX-10D/5D	MLX-28D	MLX-20L	MLX-10/5	Single-Line	Analog Multi.
Account Code Entry	*82	82 + code	Acct	AccountCode	K P B	K P B	K P B	K P	K P B	K P B
Alarm*	*759		Alarm	Alarm		K P B	K P B			K P B
Alarm Clock			AlClk	Alarm Clock	K P B	K P B	K P B		K P B	K P B
Authorization Code	*80	80	Auth	Auth Code	K P B	K P B	K P B	K P B	K P B	K P B
Auto Answer All	*754			AutoAns All						K P B
Auto Answer Intercom	*753			AutoAnsIcom						K P B
Auto Dial			AutoD	Auto Dial	K P B	K P B	K P B	K P B		K P B
Inside (ext., group, zone)	*22 + ext. no.		In	Inside						
Outside	*21 + tel. no.		Out	Outside						
Automatic Line Selection	*14				K P B	K P B	K P B	K P B	K P B	K P B
Begin Sequence	**14									
End Sequence										
Barge-In*†	*58		Barge	Barge In	K P B	K P B	K P B	K P B		K P B
Callback					K P B	K P B	K P B	K P B	K P B	K P B
Automatic			CbckA	Cback Auto						
On	*12		On	On						
Off	**12		Off	Off						
Selective	*55	55	CbckS	Cback Sel						
Cancel selective		*55								
Camp-On	*57	57	Camp	Camp On	K P B	K P B	K P B	K P B		K P B

* System operator feature only

† Centralized telephone programming only

Feature	Prog Code	Feature Code	2-Line Display	7-Line Display	MLX-10D/5D	MLX-28D	MLX-20L	MLX-10/5	Single-Line	Analog Multi.
Call Waiting			CWait	CallWaiting	K P B	K P B	K P B	K P B	K P B	K P B
On	*11		On	On						
Off	**11		Off	Off						
Call Waiting Pickup		87								
Conference	*772	772	Conf	Conference	B	B	B	B		B
Contrast			Ctrst		K P B	K P B	K P B			K P B
Coverage			Cover	Coverage	K P B	K P B	K P B	K P B		K P B
Cover inside and outside calls	*48		CvIns, On	CoverInside, On					K P B	
Cover outside calls only	**48		CvIns, Off	CoverInside, Off					K P B	
Receiver buttons				Group	K P B	K P B	K P B	K P B		K P B
Group	*42 + ext. no.		Group	Primary	K P B	K P B	K P B	K P B		K P B
Primary	*40 + ext. no.		Prmry	Secondary	K P B	K P B	K P B	K P B		K P B
Secondary			Secnd							
Sender buttons	*41 + ext. no.			CoverageOff						
Coverage Off			Cvoff		K P B	K P B	K P B	K P B		K P B
Coverage VMS Off	*49				K P B	K P B	K P B	K P B		K P B
	*46									
Data Status	*83 + ext. no.				K P B	K P B	K P B	K P B		K P B
Direct Voice Mail	*56	56	DrcVM	Direct VM	K P	K P	K P	K P	K P	K P
Directories			Dir	Directory						
Extension Directory	(display only)		ExtDir	Ext Dir	K P B	K P B	K P B			
Personal Directory				Personal Dir			K P B			
System Directory	(display only) (sys. prog.)		SysDir	System Dir	K P B	K P B	K P B			
Do Not Disturb	*47		DND	DoNotDistrb	K P B	K P B	K P B	K P B		K P B
Drop	*773	773	Drop	Drop	B	B	B	B		B

Feature	Prog Code	Feature Code	2-Line Display	7-Line Display	MLX-10D/5D	MLX-28D	MLX-20L	MLX-10/5	Single-Line	Analog Multi.
Extension Status										
Direct-Line Console*										
Status Off	*760	760 + DSS button	OPES, ESOff	OperatorES, ESOff OperatorES, ES1		K P B	K P B			K P B
Status 1	*761	761 + DSS button	OPES, ES1	OperatorES, ES2						
Status 2	*762	762 + DSS button	OPES, ES2							
Telephones (rooms or agents)					K P B	K P B	K P B	K P B	K P B	K P B
Status Off		*44		ES Status, ES1						
Status 1	*45	45	ES, ES1	ES Status, ES2						
Status 2	*44	44	ES, ES2							
Feature Button	*20			Feature Btn						K P B
Forward and Follow Me					K P B	K P B	K P B	K P B	K P B	K P B
Activate										
Forward (inside)	*33	33 + ext. no.	Forwd	Forward						
Remote Call Forward (outside)	*33	33 + tel no.	Forwd	Forward						
Follow Me		34 + ext. no.	FlwMe	Follow Me						
Cancel										
cancel sending from your telephone		33 + your ext. no.								
cancel sending from one extension		*34 + ext. no.		CanclFollow (QCC only)						
cancel sending from all extensions		*34*		CanclFollow (QCC only)						

* System operator feature only

Feature	Prog Code	Feature Code	2-Line Display	7-Line Display	MLX-10D/5D	MLX-28D	MLX-20L	MLX-10/5	Single-Line	Analog Multi.
Group Calling										
In-Queue Alarm button	*22 + calling group ext. no.		GrpCl	Group Call	K P B	K P B	K P B	K P B		K P B
Calling group supervisor*						K P B	K P B			K P B
Enter supervisor mode*		32 + **Hold**								
Exit supervisor mode*		32 + **Drop**								
Available (ES Status 2)	*762	762 + DSS bt.	OPES, ES2	OperatorES, ES2						
Unavailable (ES Status Off)	*760	760 + DSS bt.	OPES, ESOff	OperatorES, ES Off						
Calling group members					K P B	K P B	K P B	K P B	K P B	K P B
Sign in (Available)			ES	Status, ES2 ES Status, ES Off						
Sign out (Unavailable)	*44	44	ES,Off	ES Status, ES1						
After-call work state (CMS only)	*45	*44 45	ES,ES1							
Group Page Auto Dial Button	*22 + paging group ext. no.		GrpPg	Group Page	K P B	K P B	K P B	K P B		
Headset Options			Hdset	Hdset	K P B	K P B	K P B	K P B		
Auto Answer	*780		Auto	Auto Answer						
Hang Up†	*781			Hang Up						
Mute (Headset/ Handset)	*783		Mute	Mute						
Status	*782		Stat	Status						
Hold		771			B	B	B	B		B
Hold release		**			B	B	B	B	B	B

* System operator feature only

† Centralized telephone programming only

Feature	Prog Code	Feature Code	2-Line Display	7-Line Display	MLX-10D/5D	MLX-28D	MLX-20L	MLX-10/5	Single-Line	Analog Multi.
Intercom buttons					K B	K B	K B	K B		K B
Assign buttons*										
ICOM (Default Ring)	*16			SysAccess					K B	
ICOM Originate Only	*18			SysAcc-OO					K B	
Change button type										
Ring	**19		Voice, Place, Ring	Voice Annce, Place,Ring						
Voice	*19		Voice, Place, Voice	Voice Annce, Place,Voice						
Language Choice					K P B	K P B	K P B	K P B		
English		790								
French		791								
Spanish		792								
Last Number Dial	*84	84	Last#*	LastNumDial	K P B	K P B	K P B	K P B	K P	K P B
Messaging			Msgs	Messages						
Leave Message	*25				K P B	K P B	K P B	K P B	K P B	K P B
After calling		25	LvMsg	Msg Leave						
Without calling		53 + ext no.								
Cancel msg. left		*53 + ext no.								
Message LED off	*54	54								
Posted Message	*751		Post	Posted Msg	K P B	K P B	K P B	K P B		K P B
Send/Remove Msg†	*38	38 + ext no.	SdMsg	Send/RmvMsg	K P B	K P B	K P B	K P B		K P B
Receiving messages			Msgs	Messages		K P B	K P B			K P B
Delete Message‡	*26	26	Dlete	Delete Msg	K P B	K P B	K P B			K P B
Next Message‡	*28	28	Next	Next Msg	K P B	K P B	K P B			K P B
Return Call‡	*27	27	Call	Return Call	K P B	K P B	K P B			K P B
Scroll‡	*29	29								K P B

* Centralized telephone programming only

† System operator feature only

‡ Display telephones only. Programming and feature codes are used with analog multiline telephones only.

Feature	Prog Code	Feature Code	2-Line Display	7-Line Display	MLX-10D/5D	MLX-28D	MLX-20L	MLX-10/5	Single-Line	Analog Multi.
Night Service*	*39	39	Night	Night Srvc		K P B	K P B			K P B
Notify			Ntfy	Notify	K P B	K P B	K P B	K P B		K P B
Send	*757 + ext. no.		Send	Send						
Receive	*758 + ext. no.		Recv	Receive						
Paging					K P B	K P B	K P B	K P B		K P B
Group Paging			GrpPg	Group Page						
Loudspeaker Paging			LdsPg	Loudspkr Pg						
Park	*86		Park	Park	K P B	K P B	K P B	K P B	K P	K P B
Park Zone Auto Dial*	*22 + park zone		PrkZn	Park Zone		K P B	K P B			K P B
Personal Speed Dial	# + (01–24) + *21 + tel no. + ##		PSpdDl	PersSpeedDl	K P B			K P B	K P	K P B
Personalized Ringing	*32 + ring (1–8)		PRing, Pat #1 ...Pat#8	PersonalRng, Pattern #1 ... Pattern #8	K P B	K P B	K P B	K P B		K P B
Pickup			Pkup	Pickup	K P B	K P B	K P B	K P B	K P	K P B
General use	*9		Genrl	General						
Specific extension	*9 + ext. no.	9 + ext. no.	Ext	Extension						
Specific line	*9 + line no.	9 + line no.	Line	Line						
Group	*88	88	PkupG	PickupGroup						
Privacy			Prvcy	Privacy	K P B	K P B	K P B	K P B	K P	K P B
On	*31	31								
Off		*31								
Recall	*775	775	Recll	Recall	K P B	K P B	K P B	K P B		K P B

* System operator feature only

Feature	Prog Code	Feature Code	2-Line Display	7-Line Display	MLX-10D/5D	MLX-28D	MLX-20L	MLX-10/5	Single-Line	Analog Multi.
Reminder Service			Rmind	Reminder	K P B	K P B	K P B	K P B	K P B	K P B
Set*	*81	81 + time + A or P	Set	Set						
Operator Set*†		81 + ext. no.+ time + A or P								
Cancel	**81	*81	Cancl	Cancel						
Operator Cancel†		*81 + ext. no.								
Missed†	*752		Missd	Missed						
Ringing/Idle Line Preference					K P B	K P B	K P B	K P B		K P B
On	*343		LnPrf, On	Line Preference, On						
Off	*344		LnPrf, Off	Line Preference, Off						
Ringing Options			RngOp	RingOptions						
Individual lines			1Line	One Line	K P B	K P B	K P B	K P B		K P B
Immediate ring	*37		Immed	Immed Ring						
Delay ring	*36		Delay	Delay Ring						
No ring	*35		No	No Ring						
All lines			AllLn	All Lines	K P B	K P B	K P B	K P B		K P B
Immediate ring	*347		Immed	Immed Ring						
Delay ring	*346		Delay	Delay Ring						
No ring	*345		No	No Ring						
Abbreviated ring			Abbrv	Abbreviated	K P B	K P B	K P B	K P B		K P B
On	*341		On	On						
Off	*342		Off	Off						
Send Ring (Shared **SA**)			ShRng	SharedSARng	P	P	P	P	P	P
On	*15		On	On						
Off	**15		Off	Off						

* English only: time is 12-hour (0100-1259) + 2 (A) or 7 (P); French and Spanish: time is 24-hour (0000-2359).

† System operator feature only

Feature	Prog Code	Feature Code	2-Line Display	7-Line Display	MLX-10D/5D	MLX-28D	MLX-20L	MLX-10/5	Single-Line	Analog Multi.
Saved Number Dial	*85		Save#	SaveNumDial	K P B	K P B	K P B	K P B		K P B
Send/Remove Message*	*38	38 + ext. no.	SdMsg	Send/RmvMsg		K P B	K P B			K P B
Service Observing†‡	*59 + ext. no.		Observing	Service Observing	K P B	K P B	K P B	K P B		
Signal (manual)	*23 + ext. no.		Signl	Signal	K P B	K P B	K P B	K P B		K P B
System Access buttons					P	P	P	P		P
Assign buttons†										
SA (Default Ring)	*16			SysAccess					P	
SA Originate Only	*18			SysAcc-DD					P	
Shared **SA**	*17 + primary ext. no.			ShareSysAcc					P	
Change type (**SA** or Shared **SA**)										
Ring	**19									
Voice	*19									
System Speed Dial	*24 + code (600–729)	600–729	SpdDl	SysSpeedDl	K P B	K P B	K P B	K P B	K P	K P B
Timer			Timer	Timer	K P B	K P B	K P B	K P B		K P B
Transfer	*774	774	Trans	Transfer	B	B	B	B		B
Voice Announce to Busy			Voice Place Recv	Voice Annce Place Receive	K P B	K P B	K P B	K P B		K P B
On	*10		On	On						
Off	**10		Off	Off						

* System operator feature only
† Centralized telephone programming only
‡ Cannot be QCC or CTI link

Telephone Programming

The following describes how to program features on MLX and analog multiline telephones. Because Personal Speed Dial is the only feature that single-line telephone users can program, general programming instructions for single-line telephones are not provided.

NOTE:
Features cannot be programmed on QCCs in system operator positions. Features assigned to these consoles are fixed and cannot be changed.

Programming Methods

Telephones can be programmed by dialing programming codes or, on MLX display telephones, by selecting features from the display. Analog multiline telephones cannot be programmed by selecting features from the display.

To program a telephone, first enter programming mode:

- On analog multiline telephones, slide the Test/Program (T/P) switch on the side of the telephone to **P**, or lift the handset, or press **Spkrphone** and dial *#00*.
- On MLX-10 and MLX-5 nondisplay telephones, press the **Feature** button and dial *00*.
- On MLX display telephones, use the same procedures as for the MLX nondisplay telephones, or enter programming mode by selecting `Ext Program` from the menu screen on the display.
- On MDC 9000 and MDW 9000 telephones, press the imprinted **Feat** button and dial *00*.

See the appropriate user or operator guide for more information.

NOTE:
Features can also be programmed onto individual telephones through centralized telephone programming. The steps for using programming codes vary, depending on the telephone. Tables D–2 through D–5 list the basic steps for programming each telephone type.

Table D–2. Programming Analog Multiline Telephones

Step	Action
1 Label the button. **Note:** Skip this step if the feature is not programmed on a button.	Remove the clear label cover from the phone: insert the end of a paper clip in the notch at the top of the cover. Write the feature name on the card next to the button to be programmed. Replace the cover.
2 Begin programming.	Slide the T/P switch on the side of the phone to **P**.
3 Select the feature or setting.	Press the button you labeled. *If you have a display phone, it shows the name of the feature currently programmed on the button. If no feature is programmed, the display indicates that the button is blank.* **Note:** If the feature does not get programmed onto a button, press any line button. This does not affect the button in any way. Dial the programming code. *The feature is programmed.*
4 End programming.	Slide the T/P switch to the center position.

Table D–3. Programming MLX-10 and MLX-5 Nondisplay Telephones

Step	Action
1 Label the button. **Note:** Skip this step if the feature will not be programmed onto a button.	Remove the clear label cover from the phone: pull up on the tab that extends from the top of the cover. Write the feature name on the card next to the button to be programmed. Replace the cover.
2 Begin programming.	Press the **Feature** button and then dial *00*.
3 Select the feature or setting.	Press the button you labeled. **Note:** If the feature does not get programmed onto a button, press any line button. This does not affect the button in any way. Dial the programming code. *The feature is programmed.*
4 End programming.	Press the **Feature** button and dial **00*.

Table D–4. Programming MLX Telephones Using the Display

Step	Action
1 Label the button to be programmed. **Note:** Skip this step if the feature will not be programmed onto a button.	Remove the clear label cover from the telephone by pulling up on the tab that extends from the top of the cover. Write the feature name on the card next to the button to be programmed. Replace the cover.
2 Begin programming.	Press **Menu**. Select `Ext Program` from the display. Select `Start` from the display.
3 Identify the button to be programmed.	Press the button you labeled. **Note:** If the feature does not get programmed onto a button, press any line button. This does not affect the button in any way. *The display identifies the feature currently programmed on the button. If no feature is programmed, the display indicates that the button is blank.*
To delete the features currently programmed on the button:	Select `Delete` from the display. *The button is now blank.* Press the button you labeled again to continue programming. **Note:** If the currently programmed feature was not deleted from the button, the new feature programmed onto it will replace it.
To display features:	Select `List Feature` from the display. The screen lists feature names in alphabetical order.

Continued on next page

Table D–4. Programming MLX Telephones Using the Display *(Continued)*

Step	Action
4 Select the feature.	
If the feature name is on the display:	Press the button next to or below the name of the feature to be programmed.
If the feature name is not on the display:	Press **More**.
To move through the list of features page by page,	Press **More**.
or	
To jump to the screen that displays the feature name.	Select `Find Feature` from the display. Select the range of letters from the display that corresponds to the first letter of the feature name. For example, if the feature begins with `A`, select `ABC`. If the feature is not displayed on the page that you jumped to, press **More**. When you find the feature you want, press the button next to or below it.
5 Respond to any additional prompts on the display.	Select the appropriate prompt (for example, select `On` or `Off` to turn inside Coverage on or off), and/or enter required information (for example, dial a phone number for Auto Dial). Select `Enter`.
6 End programming.	
To return to the Home screen:	Press **Home**, or lift and replace the handset.
To return to the Menu screen:	Press **Menu**.

NOTE:
MLX display telephones can also be programmed using the method described for MLX-10 and MLX-5 nondisplay telephones. For example, the programming mode can be entered by pressing the **Feature** button and dialing *00*, then referring to the display to continue the programming process. Or, enter programming by using the display and then dial a programming code to select the feature rather than selecting it from the display.

Table D–5. Programming MDC 9000 and MDW 9000 Telephones

Step	Action
1 Label the button to be programmed. **Note:** Skip this step if the feature will not be programmed onto a button.	Remove the clear label cover from the telephone by pulling up on the tab that extends from the top of the cover. Write the feature name on the card next to the button to be programmed. Replace the cover.
2 Begin programming.	Press the imprinted **Feat** button. Dial *00*.
3 Select the feature or setting.	Press the button you labeled. **Note:** If the feature does not get programmed onto a button, press any line button. This does not affect the button in any way. Dial the programming code. *The feature is programmed.*
4 End programming.	Press the imprinted **Feat** button. Dial *00*.

Button Diagrams

E

This appendix contains the button diagrams for Hybrid/PBX, Key, and Behind Switch systems.

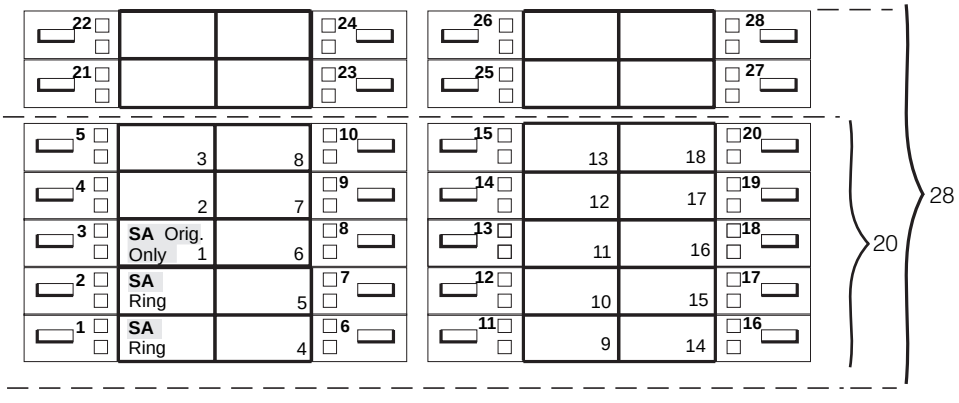

Figure E–1. MLX-20L and MLX-28D Telephone Button Diagram (Hybrid/PBX Mode)

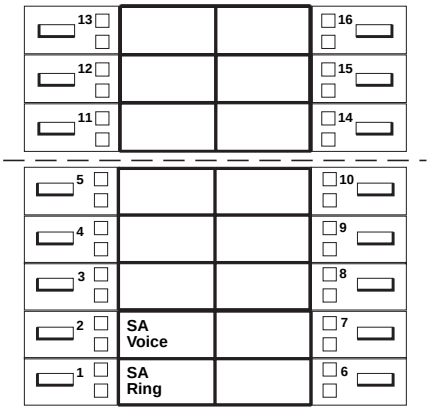

Figure E–2. MLX-16DP Telephone Button Diagram (Hybrid/PBX Mode)

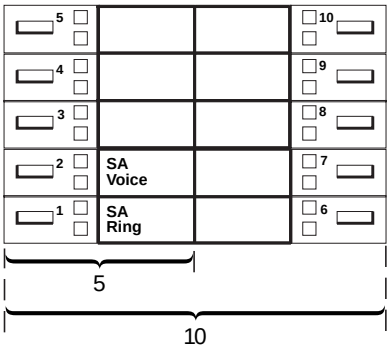

Figure E–3. MLX 5- and 10-Button Telephone Button Diagram (Hybrid/PBX Mode)

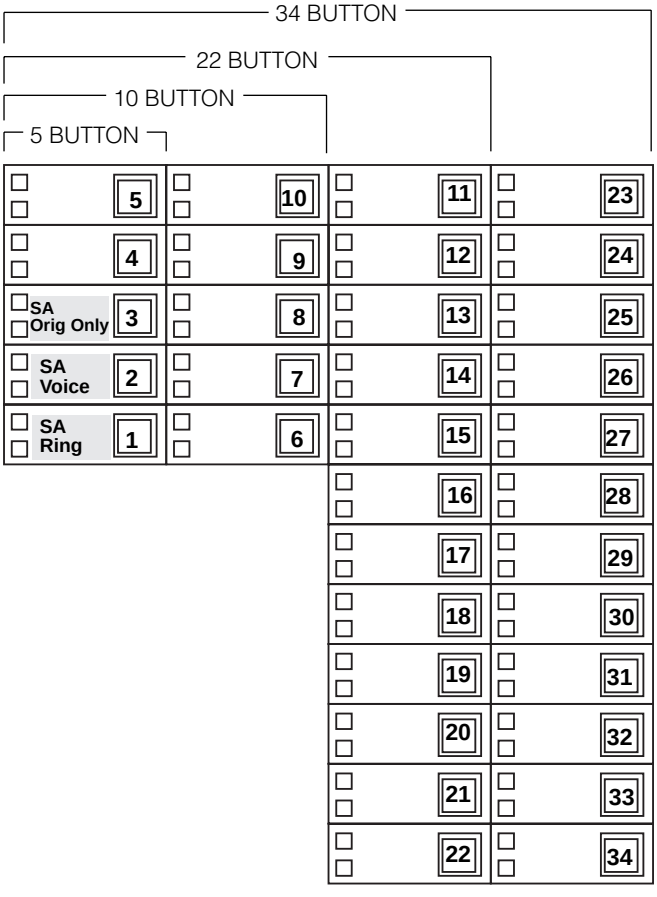

Figure E–4. Analog Multiline Telephone Button Diagram (Hybrid/PBX Mode)

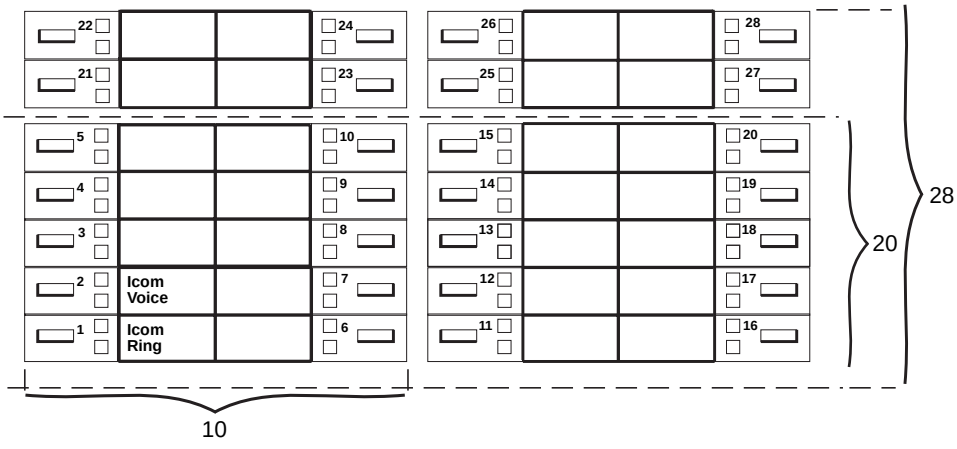

Key Mode:
Up to 8 personal line buttons are assigned beginning at button 3.

Behind Switch Mode:
One prime line button is assigned to button 3.

Figure E–5. MLX-20L and MLX-28D Telephone Button Diagram (Key and Behind Switch Modes)

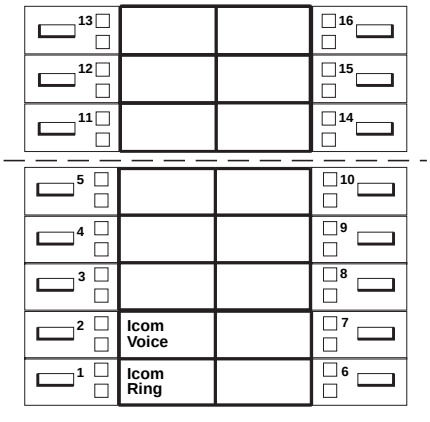

Key Mode:
Up to 8 personal line buttons are assigned beginning at button 3.

Behind Switch Mode:
One prime line button is assigned to button 3.

Figure E–6. MLX-16DP Telephone Button Diagram (Key and Behind Switch Modes)

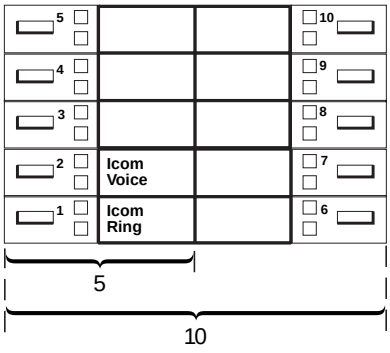

Behind Switch Mode:
One prime line is assigned to button 3

Figure E–7. MLX 5- and 10-Button Telephone Button Diagram (Key and Behind Switch Modes)

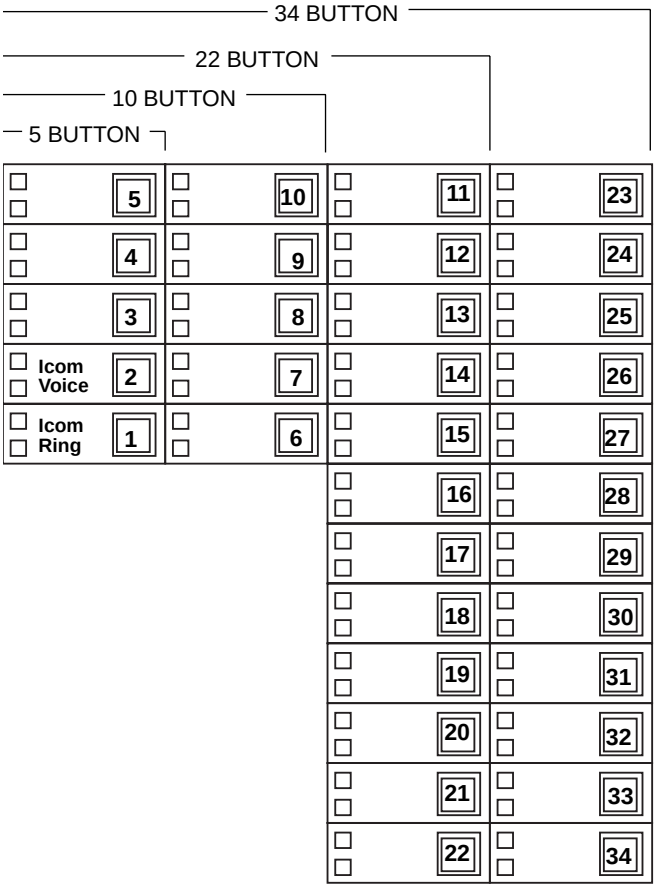

Key Mode:
Up to 8 Personal line buttons are assigned beginning at button 3.

Behind Switch Mode:
One prime line button is assigned to button 3.

Figure E–8. Analog Multiline Telephone Button Diagram (Key and Behind Switch Modes)

Sample Reports

F

This appendix includes samples of the print reports generated by the communications system. Table F–1 lists the system reports and the pages in this appendix where samples can be found.

NOTE:
The system's Station Message Detail Recording (SMDR) feature reports incoming and outgoing call details.

Table F–1. Sample Report Pages

For ...	See ...
System Information Report	F–6
Dial Plan Report	F–8
Label Information Report	F–41
Tie Trunk Information Report	F–12
DID Trunk Information Report	F–13
GS/LS Trunk Information Report	F–14
General Trunk Information Report	F–15
Switch 56 Data Information Report	F–16
DS1 Information Report	F–17

Continued on next page

Table F–1. Sample Report Pages *(Continued)*

For ...	See ...
PRI Information Report	F–18
Remote Access (DISA) Information Report	F–21
Operator Information Report	F–22
Allowed Lists Report	F–24
Access to Allowed Lists Report	F–25
Disallowed Lists Report	F–26
Access to Disallowed Lists Report	F–27
Automatic Route Selection Report	F–28
Extension Directory Report	F–29
System Directory Report	F–30
Group Paging Report	F–31
Extension Information Report	F–32
Group Coverage Information Report	F–34
Group Calling Information Report	F–35
Night Service Information Report	F–36
Group Call Pickup Report	F–37
Error Log Report	F–38
Authorization Code Information Report	F–39
BRI Information Report	F–40
Non-Local Dial Plan Report	F–41
Service Observing Information Report	F–42

Table F–2 lists all of the system reports and includes: the print menu option used to print each report, the report name, and a brief description of the report.

To access the menu options listed in Table F–2, select the `Print` option on the System Programming menu.

Table F–2. System Reports

Menu Option	Report Name	Description
All		Prints each of the reports available on the Print menu, from SysSet-up to Error Log. **Note:** With All selected, four trunk information reports automatically print. See Trunk Info.
SysSet-up	System Information	Systemwide information such as return intervals, system mode, system programming port, slot assignments, and so on.
Dial Plan	Dial Plan	Extensions assigned to pools, paging zones, calling groups, lines or trunks, and stations (in the report); labels for lines/trunks and stations.
Labels	Label Information	Labels assigned to stations (extensions), Posted Messages, and names and telephone numbers in MLX-20L Personal Directory.
Trunk Info		Select to display four trunk options: Tie, DID, Loop/Ground, General.
TIE	TIE Trunk Information	Extensions assigned to, and signaling attributes associated with, Tie trunks.
DID	DID Trunk Information	Extensions assigned to, and signaling attributes associated with, DID trunks.
Loop/ Ground	GS/LS Trunk Information	Extensions assigned to, and signaling attributes for, ground- and loop-start lines/trunks.
General	General Trunk Information	All identified extensions and feature-related attributes of each extension.
S56 Data	Switch 56 Data Information Report	Dial Plan Routing information and programmable options.
T1 Info	DS1 information	Options (line, signal, and so on) assigned to T1 trunks or lines.
PRI Info	PRI Information	PRI trunks assigned to B-channel groups.
RmoteAccess	Remote Access (DISA) Information	Remote access dial code, class of restriction, barrier code information.
Oper Info	Operator Information	For each system operator position: logical ID, extension number, label, type (DLC or QCC). All general system operator options, such as backup position; call types and priorities.
AllowList	Allowed Lists	Telephone numbers included in Allowed Lists. Lists numbered 0–7; entries numbered 0–9.

Continued on next page

Table F–2. System Reports *(Continued)*

Menu Option	Report Name	Description
AllowListTo	Access to Allowed Lists	Lists numbered 0–7. If the Allowed List is assigned to remote access users and barrier codes are used, barrier codes are numbered 0–16. If no barrier codes are used, 17 means list is assigned to tie-trunk users and 18 means list is assigned to non-tie-trunk users.
DisallowLst	Disallowed Lists	Telephone numbers included in Disallowed Lists. Lists are numbered 0–7, and entries are numbered 0–9.
DisallowTo	Access to Disallowed Lists	Telephones to which Disallowed Lists are assigned. Lists are numbered 0–7. If the Disallowed List is assigned to Remote Access users and barrier codes are used, the barrier codes are numbered 0–16. If no barrier codes are used, 17 means the Disallowed List is assigned to tie-trunk users and 18 means the Disallowed List is assigned to non-tie-trunk users.
ARS	Automatic Route Selection	Access code; table types with area codes and exchanges; routes for subpatterns A and B, FRL, absorb digit, delete digit, Dial 0, and N11 tables.
Ext Direct	Extension Directory	Slot/port addresses, extensions, labels and feature-related attributes. Column headings are printed on the first page only and are not carried over to subsequent pages. Column headings 4 through 11 (and 15 through 22) should be read vertically. That is: FACE (Forced Account Code Entry); HBIS (HFAI/BIS); RCFW (Remote Call Forward); MICD (Microphone Disable); SIG (Voice Signal); RSTR (Calling Restrictions); ARSR (ARS Restriction Level); 2BDT (2B Data Capability).
Sys Direct	System Directory	System Speed Dial number, label and telephone number in System Directory, and whether number should display.
Group Page	Group Paging	Extension number for each group and the extension number of each telephone assigned to the group.

Continued on next page

Table F–2. System Reports *(Continued)*

Menu Option	Report Name	Description
Ext Info	Extension Information	For each specified station (extension): type of equipment connected, features assigned, ESS supervisor status, and features assigned to each button. On this report, MLX-16DP telephones are reported as MLX-28D. As of Release 5.0, MLX-5 and MLX-5D telephones are reported as 5-button telephone sets. In releases prior to Release 5.0, MLX-5 and MLX-5D telephones are reported as MLX-10 and MLX-10D telephones, respectively.
GrpCoverage	Group Coverage Information	Extension number for each group and the extension number for each telephone assigned to the group. Information is printed only for calling groups with members and/or lines/trunks assigned.
Grp Calling	Direct Group Calling Information	Group calling options (hunt, type, message waiting, station, delay announcements, alarm thresholds, and so on), the extension number for each telephone assigned to the group, and the lines or trunks assigned to the group.
Night Servce	Night Service Information	The operator, password required, time-of-day, and Emergency Allowed List extension numbers.
Call Pickup	Group Call Pickup	Extension numbers for telephones assigned to each group; pickup groups numbered 1–30.
Error Log	Error Log	Error message and code, time and day error occurred, frequency of error. See the *Maintenance and Troubleshooting* guide.
Auth Code	Authorization Code Information	Authorization Code and permissions for extensions to which authorization codes are assigned.
BRI Info	BRI Information	Service Profile ID and Directory Number for each BRI line, flexible timers, and fixed timers and counters.
NonLcl UDP	Non-Local Dial Plan	Ranges of extension numbers for non-local dial plan extensions connected to a networked external switch; pattern number associated with each range. For each pattern, shows Pool number, absorbed and prepended (other) digits, FRL, and call type (voice, data, or both).
ServiceObs	Service Observing Information Report	Service Observing group information including: Group number, Observer number, and member information (extension and label).

System Information Report

Print Menu Option: SysSet-up

```
SYSTEM INFORMATION

Current Date:    01/04/00
Current Time:    00:21:15
System :  Mode           AutoMaintBusy   AutoBusyTie
       :  Hybrid/PBX     Disable         Disable

Language:    SystemLang       SMDR            Printer

             English          English         English

CTI Links                     :    19
Direct Line Operators         :    14   18   22   42
Queued Call Operators         :    10
SysProg Port                  :    10          Password    :   craftr4

Transfer : Type      Audible       OneTouch(Complete)  ReturnTimer
         : Ring      MusicOnHold   Transfer(Auto)      5 rings

VMS Transfer Return Interval    : 4
Paging System Lines             :
Music On Hold Line              : 804
Camp On Time                    : 90 sec
Call Park Return Time           : 180 sec
Auto Callback Rings             : 3
Extension Status (ESS)          : Group Call / CMS
ESS Operators                   :

SMDR :   Min.CallTime    CallReport    Format    TalkTime    UDP
     :   40 sec          In/Out        Basic     Enable      None

Intercom Dial Tone              :  Inside
Reminder Service Cancel         :    :
Behind Switch Code              :  Drop    Transfer   Conference
Inter-digit Timer (seconds)     :  24  24  24  10  10  10  10   5   5
Recall Timer                    :  450 msec
Second Dial-tone Timer          :  200 msec
Rotary Line Cut Through         :  Delay
Unassigned Extension            :  10
Automatic Backup                :  Weekly - 04:30 Sunday

TI/PRI/BRI Clock Synchronization:
Primary             Secondary         Tertiary
02/01 Loop          04/01 Local       04/02 Local
```

System Information Report— *Continued*

```
Slot # 1:         008 MLX
Slot # 2:         408
Slot # 3:         008
Slot # 4:         408
Slot # 5:         800 GS/LS
Slot # 6:         008 GS/LS-MLX
Slot # 7:         800 CO-BRI
Slot # 8:         008
Slot # 9:         016 (Ringing Frequency - 25 Hz.)
Slot #10:         408 GS/LS
Slot #11:         008
Slot #12:         800
Slot #13:         800 DID
Slot #14:         400 EM
Slot #15:         012
Slot #16:         008 MLX
Slot #17:         408               * Not Present *
```

Dial Plan Report

Print Menu Option: Dial Plan
Sections: Pools; Telephone Paging Zones; Direct Group Calling Group; Lines/Trunks; Stations

```
DIAL PLAN FOR POOLS

POOL.#  1:    70
POOL.#  2:   890
POOL.#  3:   891
POOL.#  4:   892
POOL.#  5:   893
POOL.#  6:   894
POOL.#  4:   895
POOL.#  8:   896
POOL.#  9:   897
POOL.# 10:   898
POOL.# 11:   899

DIAL PLAN FOR TELEPHONE PAGING ZONES

TPZ #  1:     793
TPZ #  2:     794
TPZ #  3:     795
TPZ #  4:     796
TPZ #  5:     797
TPZ #  6:     798
TPZ #  7:     799

DIAL PLAN FOR DIRECT GROUP CALLING GROUP

DGCG  #  1:   770
DGCG  #  2:   771
DGCG  #  3:   772
DGCG  #  4:   773
DGCG  #  5:   774
.                                          .
.                                          .
.                                          .
DGCG  # 32:  7929

DIAL PLAN FOR LINES/TRUNKS

LINE #   1:    801        OUTSIDE        LINE # 2:   802    OUTSIDE
LINE #   3:    803        OUTSIDE        LINE # 4:   804    OUTSIDE
LINE #   5:    805        OUTSIDE        LINE # 6:   806    OUTSIDE
LINE #   7:    807        OUTSIDE        LINE # 8:   808    OUTSIDE
LINE #   9:    809        OUTSIDE        LINE # 10:  810    OUTSIDE
.                                        .
.                                        .
.                                        .
LINE #   75:   875        OUTSIDE        LINE # 76:  876    OUTSIDE
```

Dial Plan Report—*Continued*

```
DIAL PLAN FOR STATIONS

STN #:   1     10         OPERATR        STN  #:  2     710
STN #:   3     11                        STN  #:  4     711
STN #:   5     12                        STN  #:  6     712
STN #:   7     13         EXT 13         STN  #:  8     713
STN #:   9     14         EXT 14         STN  #:  10    714
STN #:   11    15                        STN  #:  12    715
STN #:   13    16                        STN  #:  14    716
STN #:   15    17                        STN  #:  16    717
STN #:   17    18         EXT 18         STN  #:  18    19
STN #:   19    20                        STN  #:  20    21
STN #:   21    22         OPERATR        STN  #:  22    23
STN #:   23    24                        STN  #:  24    25
STN #:   25    26                        STN  #:  26    21
STN #:   27    28                        STN  #:  28    29
STN #:   29    30         AUDIXVP        STN  #:  30    31        AUDIXVP
STN #:   31    32         AUDIXVP        STN  #:  32    33        AUDIXVP
STN #:   33    34                        STN  #:  34    35
STN #:   35    36                        STN  #:  36    31
STN #:   37    38                        STN  #:  38    39
STN #:   39    40                        STN  #:  40    41
STN #:   41    42         EXT 42         STN  #:  42    742
.                                        .
.                                        .
.                                        .
STN #:  121    7198                      STN #:   122   7398
STN #:  123    5555                      STN #:   124   7399
```

Dial Plan Report—*Continued*

```
COMPLETE DIAL PLAN FOR STATIONS AND ADJUNCTS

ID #:  1   4000      7300        ID #:  2   4001      7301
ID #:  3   4002      7302        ID #:  4   4003      7303
ID #:  5   4004      7304        ID #:  6   4005      7305
ID #:  7   4006      7306        ID #:  8   4007      7307
ID #:  9   4008      7308        ID #: 10   4009      7309
ID #: 11   4010      3000        ID #: 12   4011      3001
ID #: 13   4012      3002        ID #: 14   4013      3003
ID #: 15   4014      3004        ID #: 16   4015      3005
ID #: 17   4016      3006        ID #: 18   4017      3007
ID #: 19   4018      3008        ID #: 20   4019      3009
ID #: 21   4020      3010        ID #: 22   4021      3011
ID #: 23   4022      3012        ID #: 24   4023      3013
ID #: 25   4024      3014        ID #: 26   4025      3015
ID #: 27   4026      3016        ID #: 28   4027      3017
ID #: 29   4028      3018        ID #: 30   4029      3019
ID #: 31   4030      3020        ID #: 32   4031      3021
ID #: 33   4032      3022        ID #: 34   4033      3023
ID #: 35   4034      3024        ID #: 36   4035      3025
ID #: 37   4036      3026        ID #: 38   4037      3027
ID #: 39   4038      3028        ID #: 40   4039      3029
ID #: 41   4040      3030        ID #: 42   4041      3031
ID #: 43   4042      3032        ID #: 44   4043      3033
ID #: 45   4044      3034        ID #: 46   4045      3035
ID #: 47   4046      3036        ID #: 48   4047      3037
ID #: 49   4048      3038        ID #: 50   4049      3039
ID #: 51   4050      3040        ID #: 52   4051      7351
ID #: 53   4052      3042        ID #: 54   4053      7353
ID #: 55   4054      7354        ID #: 56   4055      7355
ID #: 57   4056      7356        ID #: 58   4057      7357
ID #: 59   4058      7358        ID #: 60   4059      7359
ID #: 61   7160      7360        ID #: 62   7161      7361
ID #: 63   7162      7362        ID #: 64   7163      7363
ID #: 65   7164      7364        ID #: 66   7165      7365
ID #: 67   7166      7366        ID #: 68   7167      7367
ID #: 69   7168      7368        ID #: 70   7169      7369
.                                 .
.                                 .
.                                 .
ID #:191   5151      7490        ID #:192   5152      7491
ID #:193   5153      7492        ID #:194   5154      7493
ID #:195   5155      7494        ID #:196   5156      7495
ID #:197   5156      7496        ID #:198   5158      7497
ID #:199   5158      7498        ID #:200   5160      7499
```

Label Information Report

Print Menu Option: Labels
Sections: Telephone Personal Directory; Posted Messages and Numbers

```
LABEL INFORMATION

Executive Telephone #   10:  Personal Directory

Name          Number                          Display

Executive Telephone #   14:  Personal Directory

Name          Number                          Display

Executive Telephone #   15:  Personal Directory

Name          Number                          Display
MSG #                POSTED MESSAGE

   1                    DO NOT DISTURB
   2                    OUT TO LUNCH
   3                    AT HOME
   4                    OUT SICK
   5                    IN A MEETING
   6                    IN CONFERENCE
   7                    WITH A CLIENT
   8                    WITH A CUSTOMER
   9                    AWAY FROM DESK
  10                    OUT ALL DAY
  11                    CUSTM MSG11
  12                    CUSTM MSG12
  13                    CUSTM MSG13
  14                    CUSTM MSG14
  15                    CUSTM MSG15
  16                    CUSTM MSG16
  17                    CUSTM MSG17
  18                    CUSTM MSG18
  19                    CUSTM MSG19
  20                    CUSTM MSG20
```

Tie Trunk Information Report

Print Menu Option: Trunk Info and TIE

```
TIE TRUNK INFORMATION

TRUNK     849        Slot/Port : 14/ 1       TIE-PBX
Direction: 2 Way     E&M Signal: Type1S      Dialtone  : Remote
InType   : Wink      InMode    : Rotary      AnsSupvr  : 300  ms
OutType  : Wink      OutMode   : Rotary      Disconnect: 300  ms

TRUNK     850        Slot/Port : I4/ 2       TIE-PBX
Direction: 2 Way     E&M Signal: Type1S      Dialtone  : Remote
InType   : Wink      InMode    : Rotary      AnsSupvr  : 300  ms
OutType  : Wink      OutMode   : Rotary      Disconnect: 300  ms

TRUNK     851        Slot/Port : 14/ 3       TIE-PBX
Direction: 2 Way     E&M Signal: Type1S      Dialtone  : Remote
InType   : Wink      InMode    : Rotary      AnsSupvr  : 300  ms
OutType  : Wink      OutMode   : Rotary      Disconnect: 300  ms

TRUNK     852        Slot/Part : 14/ 4       TIE-PBX
Direction: 2 Way     E&M Signal: Type1S      Dialtone  : Remote
InType   : Wink      InMode    : Rotary      AnsSupvr  : 300  ms
OutType  : Wink      OutMode   : Rotary      Disconnect: 300  ms
```

DID Trunk Information Report

Print Menu Option: Trunk Info and DID

```
DID      TRUNK INFORMATION


Trk SS/PP Blk DiscTime Type ExpDig DelDig AddDig    Signal  InvDest
841 13/ 1  1    500ms  Wink    4      3       1   TouchTone BkupExt
842 13/ 2  1    500ms  Wink    4      3       1   TouchTone BkupExt
843 13/ 3  2    500ms  Wink    3      0              Rotary BkupExt
844 13/ 4  2    500ms  Wink    3      0              Rotary BkupExt
845 13/ 5  1    500ms  Wink    4      3       1   TouchTone BkupExt
846 13/ 6  1    500ms  Wink    4      3       1   TouchTone BkupExt
847 13/ 7  2    500ms  Wink    3      0              Rotary BkupExt
848 13/ 8  1    500ms  Wink    4      3       1   TouchTone BkupExt
```

GS/LS Trunk Information Report

Print Menu Option: Trunk Info and Loop/Ground

GS/LS TRUNK INFORMATION

Trk	SS/PP	Type	OutMode	RelDisc	ChannelUnit	LS-ID Delay
801	2/ 1	Loop	TouchTone	Yes	N/A	N/A
802	2/ 2	Loop	TouchTone	Yes	N/A	N/A
803	2/ 3	Loop	TouchTone	Yes	N/A	N/A
804	2/ 4	Loop	TouchTone	Yes	N/A	N/A
805	4/ 1	Loop	Rotary	Yes	N/A	N/A
806	4/ 2	Loop	Rotary	Yes	N/A	N/A
807	4/ 3	Loop	Rotary	Yes	N/A	N/A
808	4/ 4	Loop	Rotary	Yes	N/A	N/A
809	5/ 1	Ground	TouchTone	N/A	N/A	N/A
810	5/ 2	Ground	TouchTone	N/A	N/A	N/A
811	5/ 3	Loop	Rotary	Yes	N/A	N/A
812	5/ 4	Loop	Rotary	Yes	N/A	N/A
813	5/ 5	Loop	Rotary	Yes	N/A	N/A
814	5/ 6	Loop	Rotary	Yes	N/A	N/A
815	5/ 7	Loop	TouchTone	Yes	N/A	N/A
816	5/ 8	Loop	Rotary	Yes	N/A	N/A
817	6/ 1	Ground	Rotary	N/A	N/A	N/A
.						
.						
879	15/ 7	LS-ID	Rotary	Yes	N/A	Yes
880	15/ 8	LS-ID	Rotary	Yes	N/A	No

General Trunk Information Report

Print Menu Option: Trunk Info and General

GENERAL TRUNK INFORMATION

Trk	SS/PP	RemAccess	Pool	TlPrfx	HldDisc	Principal	QCC Prty	QCC Oper	Extern Switch	Extern SMDR
801	2/ 1	No Remote	70	Yes	Long		4		60	BOTH
802	2/ 2	No Remote	70	Yes	Long		4		60	IN
803	2/ 3	No Remote	70	Yes	Long		4		60	OUT
804	2/ 4	No Remote		Yes	Long		4			
805	4/ 1	No Remote		Yes	Long		4			
806	4/ 2	No Remote		Yes	Long		4			
807	4/ 3	No Remote		Yes	Long		4			
808	4/ 4	No Remote		Yes	Long		4			
809	5/ 1	No Remote	890	Yes	Long		4	10		
810	5/ 2	No Remote		Yes	Long		4			
811	5/ 3	No Remote		Yes	Long		4			
812	5/ 4	No Remote		Yes	Long		4			
813	5/ 5	No Remote		Yes	Long		4			
814	5/ 6	No Remote		Yes	Long		4			
815	5/ 7	No Remote		Yes	Long		4			
816	5/ 8	No Remote		Yes	Long		4			
817	6/ 1	Dedicated		Yes	Long	42	4			
.	.	.		.	.	.	.	.	.	.
.	.	.		.	.	.	.	.	.	.
912	10/1	No Remote	891	Yes	Long		4		12	OUT
913	10/2	No Remote	891	Yes	Long		4		12	BOTH

Switch 56 Data Information Report

Print Menu Option: Trunk Info and S56 Data

```
          Dial Plan Routing for Network Service

                Expected Digits:  3
                Digits to Delete: 0
                Digits to Add:    0

Trk   ss/pp  Dirction   InType   OutType   AnsSup   Discnt   Inmode   Outmode  Service
801   02/01  2 Way      Wink     Wink      120      180      T-Tone   T-Tone   TIE
802   02/02  Outgoing   Delay    Delay     160      180      Rotary   T-Tone   S56
803   02/03  Incoming   Auto     Auto      100      140      Rotary   Rotary   S56
.
.
.
808   02/08  2 Way      Wink     Wink      120      180      Rotary   Rotary   TIE
```

DS1 Information Report

```
Print Menu Option:  T1 Info

DS1 SLOT ATTRIBUTES

Slot     Type  Format      Supp   Signal   LineComp     ClkSync  Src    Active
  3      T1    D4          ZCS    Rob Bit     1          Prim    Loop    Yes
  3      T1    D4          ZCS    Rob Bit     1          None    Local   Yes
```

PRI Information Report

Print Menu Option: PRI Info
Sections: Network Selection, Special Service, Call-by-Call and Dial Plan Routing Tables; PRI Information

NOTE:
The B-Channels are printed in the order in which they are searched.

```
PRI INFORMATION

Slot 5   Switch: DMS-100

Slot 11  Switch: Legend-PBX

Slot 12  Switch: Legend-PBX

System: By line

BchnlGrp #:   Slot:      TestTelNum:    NtwkServ:      Incoming Routing:
5             5                       CallbyCall     By Dial Plan
Channel ID: 23 22 21 20 19 18 17 16 15 14
            13 12 11 10  9  8  7  6  5  4
             3  2  1

Line         PhoneNumber       NumberToSend
801
802
803
.
.
.
821
822
823

BchnlGrp #:   Slot:      TestTelNum:    NtwkServ:      Incoming Routing:
79            12                      ElecTandNtwk   Route Directly to UDP
Channel ID:  1  2  3  4  5  6  7  8  9 10
            11 12 13 14 15 16 17 18 19 20
            21 22 23

Line         PhoneNumber       NumberToSend
849
850
851
.
.
.
869
870
871
```

PRI Information Report—*Continued*

```
BchnlGrp #:    Slot:      TestTelNum:    NtwkServ:      Incoming Routing:
80             11                        ElecTandNtwk   Route Directly to UDP
Channel ID:  1  2  3  4  5  6  7  8  9 10
            11 12 13 14 15 16 17 18 19 20
            21 22 23

Line         PhoneNumber       NumberToSend
825
826
827
.
.
.
845
846
847

Network Selection Table

Entry Number:         0        1       2        3
Pattern to Match:     101**** 10***

Special Service Table

Entry Number:          0       1       2        3       4       5      6      7
Pattern to Match:      011     010     01       00      0       1
Operator:              none    OP      OP       OP/P    none    none   none   none
Type of Number:        I       I       I        N       N       N      N      N
Digits to Delete:      3       3       2        2       1       0      0      0

Call-By-Call Service Table

Entry Number:        0         1               2             3           4
Pattern    0:        957       7
Pattern    1:                  1
Pattern    2:                  2
Pattern    3:                  3
Pattern    4:                  4
Pattern    5:                  5
Pattern    6:                  6
Pattern    7:                  7
Pattern    8:                  8
Pattern    9:                  9
Call Type:           BOTH      BOTH            BOTH         BOTH         BOTH
NtwkServ:            DMS-PrivateDMS-Private
DeleteDigits:        0         0               0            0            0

Entry Number:        5         6               7            8            9
Call Type:           BOTH      BOTH            BOTH         BOTH         BOTH
NtwkServ:
DeleteDigits:        0         0               0            0            0
```

PRI Information Report—*Continued*

```
Dial Plan Routing Table

Entry Number:            0          1             2            3
NtwkServ:                           Any service   Any service  Any service
Expected Digits:         4          7             10           0
Pattern to Match:
Digits to Delete:        0          7             10           0
Digits to Add:                      13            13

Entry Number:            4          5             6            7
NtwkServ:
Expected Digits:         0          0             0            0
Pattern to Match:
Digits to Delete:        0          0             0            0
Digits to Add:

Entry Number:            8          9             10           11
NtwkServ:
Expected Digits:         0          0             0            0
Pattern to Match:
Digits to Delete:        0          0             0            0
Digits to Add:

Entry Number:            12         13            14           15
NtwkServ:
Expected Digits:         0          0             0            0
Pattern to Match:
Digits to Delete:        0          0             0            0
Digits to Add:
```

Remote Access (DISA) Information Report

Print Menu Option: RmoteAccess
Sections: General Options; System Default Class of Restrictions (Non-TIE); System Default Class of Restrictions (TIE); Barrier Code Administration

```
GENERAL OPTIONS (ACCESS CODE 889)

Barrier Code required for Non-TIE DISA lines     :   Yes
Barrier Code required for TIE DISA lines    :No
Automatic Queuing enabled for DISA lines    :Yes
System Wide Barrier Code Length: 07
Date And Time of Last Barrier Code Length Change: 09:23:94, 09:45 PM

SYSTEM DEFAULT CLASS OF RESTRICTIONS (NON-TIE)

Restriction          :  UNRESTRICTED
ARS Restriction Level:  3
Allowed Lists        :
Disallowed Lists     :

SYSTEM DEFAULT CLASS OF RESTRICTIONS (TIE)

Restriction          :  UNRESTRICTED
ARS Restriction Level:  3
Allowed Lists        :
Disallowed Lists     :

BARRIER CODE ADMINISTRATION

Barrier Code number  :  1
Barrier Digits       :  2468345
Restriction          :  OUTWARD RESTRICTED
ARS Restriction Level:  3
Allowed Lists        :
Disallowed Lists     :

Barrier Code number  :  2
Barrier Digits       :  1234693
Restriction          :  UNRESTRICTED
ARS Restriction Level:  3
Allowed Lists        :
Disallowed Lists     :
.
.
Barrier Code number  :  16
Barrier Digits       :  9876115
Restriction          :  OUTWARD RESTRICTED
ARS Restriction Level:  0
Allowed Lists        :
Disallowed Lists     :
```

Operator Information Report

Print Menu Option: Oper Info
Sections: Operator Positions; General Options; DSS Options; QCC Operator Options: QCC Call Types

```
OPERATOR POSITIONS

PORT                                        CALL ALERT
ADDR.    EXT # LABEL       TYPE             (QCC ONLY)
====     ===== =======     ====              ==========
1/ 1     10    OPERATR      QCC             No
1/ 5     14    EXT 14       DLC             N/A
2/ 1     18    EXT 18       DLC             N/A
2/ 5     22    OPERATR      DLC             N/A
6/ 1     42    EXT 42       DLC             N/A

GENERAL OPTIONS

Length of hold reminder timer: 60 sec
DLC Automatic hold enabled   : No

DIRECT STATION SELECTOR (DSS) OPTIONS

BUTTON    FIRST
NUMBER    DIAL CODE
======    =========
  1              0
  2             50
  3            100
Operator Call Park codes:  881  882  883  884  885  886  884  888

QCC OPERATOR OPTIONS

Listed Directory Number for queue : 800
Held calls return to queue        : No
Automatic hold enabled            : No
Calls-in-queue alarm threshold    : 0
Time until priorities are elevated: 0 sec
Message Center Operators          :
One Touch Extend                  : AUTOMATIC
Rings before extended calls return: 4
Backup operator station           :
Voice Announce on Call 5 button   : Disable
```

Operator Information Report—*Continued*

```
QCC CALL TYPES:
        CALL TYPE            PRIORITY    OPERATORS
=======================      ========    ===================
Dial 0 Operator                 4          10
Follow Forward                  4          N/A
Unassigned DID                  4          10
Listed Directory Number         4          10
Operator's Extension            4          N/A
Returning                       4           0
Group Coverage
     Group #    1               4
     Group #    2               4
     Group #    3               4
     Group #    4               4
     Group #    5               4
     Group #    6               4
     Group #    7               4
     Group #    8               4
     Group #    9               4
     Group #   10               4
     Group #   11               4
     Group #   12               4
     Group #   13               4
     Group #   14               4
     Group #   15               4
     Group #   16               4
     Group #   17               4
     Group #   18               4
     Group #   19               4
     Group #   20               4
     Group #   21               4
     Group #   22               4
     Group #   23               4
     Group #   24               4
     Group #   25               4
     Group #   26               4
     Group #   27               4
     Group #   28               4
     Group #   29               4
     Group #   30               4
```

Allowed Lists Report

Print Menu Option: `AllowList`
Sections: Lists 1 through 7

```
ALLOWED LISTS

List :   0

Entry 0:       ------
Entry 1:       ------
Entry 2:       ------
Entry 3:       ------
Entry 4:       ------
Entry 5:       ------
Entry 6:       ------
Entry 7:       ------
Entry 8:       ------
Entry 9:       ------
   .
   .
   .
List :   7

Entry 0:       ------
Entry 1:       ------
Entry 2:       ------
Entry 3:       ------
Entry 4:       ------
Entry 5:       ------
Entry 6:       ------
Entry 7:       ------
Entry 8:       ------
Entry 9:       ------
```

Access to Allowed Lists Report

Print Menu Option: `AllowListTo`

```
ACCESS TO ALLOWED LISTS

FOR REMOTE ACCESS 17 & 18 MEAN TIE & NON-TIE RESTRICTIONS

List     1     STNS        10

               RACC        1                17       18

List     3     STNS        33

               RACC
```

Disallowed Lists Report

Print Menu Option: `DisallowLst`
Sections: Lists 1 through 7

```
DISALLOWED LISTS

List :   0

Entry 0:        ------------
Entry 1:        ------------
Entry 2:        ------------
Entry 3:        ------------
Entry 4:        ------------
Entry 5:        ------------
Entry 6:        ------------
Entry 7:        ------------
Entry 8:        ------------
Entry 9:        ------------
   .
   .
   .
List :   7

Entry 0:        ------------
Entry 1:        ------------
Entry 2:        ------------
Entry 3:        ------------
Entry 4:        ------------
Entry 5:        ------------
Entry 6:        ------------
Entry 7:        ------------
Entry 8:        ------------
Entry 9:        ------------
```

Access to Disallowed Lists Report

Print Menu Option: DisallowTo

```
ACCESS TO DISALLOWED LISTS

FOR REMOTE ACCESS 17 & 18 MEAN TIE & NON-TIE RESTRICTIONS

List     1     STNS        33

               RACC        9

List     3     STNS        33

               RACC
```

Automatic Route Selection Report

Print Menu Option: ARS
Sections: Tables

```
AUTOMATIC ROUTE SELECTION

ARS IS: ACTIVE            ACCESS CODE: 9

TABLE 17: Default Toll Output Table

Pool   Absorb     Other Digits            FRL   Call type     Start   Pattern
1)70--     00     -------------------     3     BOTH          --:--   A
2)----     --     -------------------     -     -----         --:--   A
3)----     --     -------------------     -     -----         --:--   A
4)----     --     -------------------     -     -----         --:--   A
5)----     --     -------------------     -     -----         --:--   B
6)----     --     -------------------     -     -----         --:--   B

Pool   Absorb     Other Digits            FRL   Call type     Start   Pattern
1)70--     00     -------------------     3     BOTH          --:--   B
2)----     --     -------------------     -     -----         --:--   B
3)----     --     -------------------     -     -----         --:--   B
4)----     --     -------------------     -     -----         --:--   B
5)----     --     -------------------     -     -----         --:--   B
6)----     --     -------------------     -     -----         --:--   B

TABLE 18: Default Local Output Table

Pool   Absorb     Other Digits            FRL   Call type     Start   Pattern
1)70--     00     -------------------     3     BOTH          --:--   A
2)----     --     -------------------     -     -----         --:--   A
3)----     --     -------------------     -     -----         --:--   A
4)----     --     -------------------     -     -----         --:--   A
5)----     --     -------------------     -     -----         --:--   B
6)----     --     -------------------     -     -----         --:--   B

Pool   Absorb     Other Digits            FRL   Call type     Start   Pattern
1)70--     00     -------------------     3     BOTH          --:--   B
2)----     --     -------------------     -     -----         --:--   B
3)----     --     -------------------     -     -----         --:--   B
4)----     --     -------------------     -     -----         --:--   B
5)----     --     -------------------     -     -----         --:--   B

TABLE 19: Dial 0 Output Table

Pool   Absorb     Other Digits            FRL   Call type     Start   Pattern
1)70--     00      -------------------    3     BOTH           --:--  A

TABLE 20: N11 Output Table
01)411 02)611 03)811 04)911

Pool   Absorb     Other Digits            FRL   Call type     Start   Pattern
1)70--     00      -------------------    3     BOTH           --:--  A
1)70--     00      -------------------    3     BOTH           --:--  A
```

Extension Directory Report

Print Menu Option: Ext Direct

EXTENSION DIRECTORY

Port Addr	Ext #	Label	FACE	HBIS	RCFW	MIDG	VISR	RSRT	A3RS	2BDT	Port Addr	Ext #	Label	FACE	HBIS	RCFW	MIDG	VISR	RSRT	A3RS	2BDT
1/ 1	10	OPERATR	N	N	N	N		U	3	N	1/21	710		N	N	N	N		U	3	N
1/ 2	11		N	N	N	N		O	3	Y	1/22	711		N	N	N	N		U	3	N
1/ 3	12		N	N	N	N		U	3	Y	1/23	712		N	N	N	N		U	3	N
1/ 4	13	EXT 13	N	N	N	N		U	3	N	1/24	713		N	N	N	N		U	3	N
1/ 5	14	EXT 14	N	N	N	N		U	3	N	1/25	714		N	N	N	N		U	3	N
1/ 6	15		N	N	N	N		U	3	N	1/26	715		N	N	N	N		U	3	N
1/ 7	16		N	N	N	N		U	3	N	1/27	716		N	N	N	N		U	3	N
1/ 8	17		N	N	N	N		U	3	N	1/28	717		N	N	N	N		U	3	N
2/ 1	18	EXT 18	N	Y	N	N		U	3	N	2/ 2	19		N	Y	N	N		U	3	N
2/ 3	20		N	Y	N	N		U	3	N	2/ 4	21		N	Y	N	N		U	3	N
2/ 5	22	OPERATR	N	Y	N	N		U	3	N	2/ 6	23		N	Y	N	N		U	3	N
2/ 7	24		N	Y	N	N		U	3	N	2/ 8	25		N	Y	N	N		U	3	N
3/ 1	26		N	Y	N	N		U	3	N	3/ 2	27		N	Y	N	N		U	3	N
3/ 3	28		N	Y	N	N		U	3	N	3/ 4	29		N	Y	N	N		U	3	N
3/ 5	30	AUDIXVP	N	Y	N	N		U	3	N	3/ 6	31		N	Y	N	N		U	3	N
3/ 7	32	AUDIXVP	N	Y	N	N		U	3	N	3/ 8	33		N	Y	N	N		U	3	N
4/ 1	34		N	Y	N	N		U	3	N	4/ 2	35	AUDIXVP	N	Y	N	N		U	3	N
4/ 3	36	AUDIXVP	N	Y	N	N		U	3	N	4/ 4	37		N	Y	N	N		U	3	N
4/ 5	38		N	Y	N	N		U	3	N	4/ 6	39		N	Y	N	N		U	3	N
4/ 7	40		N	Y	N	N		U	3	N	4/ 8	41		N	Y	N	N		U	3	N
6/ 1	42	EXT 42	N	N	N	N		U	3	N	6/21	742		N	N	N	N		U	3	N
.																					
.																					
.																					
7/ 1	54	EXT 54	N	N	N	N		U	3	N	7/2	754		N	N	N	N		U	3	N

System Directory Report

Print Menu Option: Sys Direct

```
SYSTEM DIRECTORY

        Code   Name              Number           Display
         600   ABC Company       555-9999         YES
         601   Jacques Smith     5551212          YES
         605   Travel Agency     912015556677     YES
```

Group Paging Report

Print Menu Option: Group Page

```
GROUP PAGING

Group #   793   STNS   :   20   21   22   23   24   25

Group #   794   STNS   :   15   16   17   18   19
```

Extension Information Report

Print Menu Option: `Ext Info` plus extension number

```
EXTENSION INFORMATION
Extn     SS/PP       Type
  10     1/ 1        MLX-20L + 1 DSS

CTI Link                :  NO                Alarms:  ACTIVE  (SUSPENDED)
Pool Access             :  70  890  891  892  893  894  895  896  897  898  899
Page Group              :
Primary Coverage        :
Secondary Coverage      :
Coverage Group          : 5
Group Coverers          : 773
NS Groups               : 10
Group Calling Member    :
Pickup Groups           :
Allowed Lists           :
Disallowed Lists        :
Restrictions            : UNRESTRICTED
ESS Sup. Status         : ACTIVE
ESS Restrictions        : ESS-0 -NO RESTRICTION
Auto Callback           : OFF
Call Waiting            : ON
Abbreviated Ring        : ON
Line Preference         : ON
Shared SA Ring          : ON
Receive Voice Calls     : ON
Coverage Inside         : OFF
Forwarding to           :
Delay Forwarding        : 0
ARS Restriction         : 3
Forced Account Code     : No
Microphone Disable      : No
Remote Forward Allow    : No
Trunk Transfer Allow    : No
NS Exclusion            : No
Voice Announce Pair     : No
Voice/Data Pair         : No
BIS/HFAI                : No
Language                : English
Authorization Code      : 3134
2B Data Port            : No
Primary Ring Delay      : 2
Secondary Ring Delay    : 2
Group Cover Delay       : 3
HotLine Extension       : No
Display Preference      : NAME
Service Observer        : 10
Service Observing Group : 6802  6804
```

Extension Information Report— *Continued*

```
EXTENSION INFORMATION

Extn      SS/PP      Type
  10       1/ 1      MLX-20L + 1 DSS

Button   34    Blank                  Status None
Button   33    Blank                  Status None
Button   32    Blank                  Status None
Button   31    Blank                  Status None
Button   30    Blank                  Status None
Button   29    Blank                  Status None
Button   28    Blank                  Status None
Button   27    Blank                  Status None
Button   26    Blank                  Status None
Button   25    Blank                  Status None
Button   24    Blank                  Status None
Button   23    Blank                  Status None
Button   22    Blank                  Status None
Button   21    Blank                  Status None
Button   20    Forced Release         Status None
Button   19    Pool Inspect           Status None
Button   18    Headset Auto Answer    Status Off
Button   17    Join                   Status None
Button   16    Cancel                 Status None
Button   15    Alarm Status           Status Off
Button   14    Night Service          Status Off
Button   13    Headset Status         Status Off
Button   12    Destination            Status None
Button   11    Release                Status None
Button   10    Position Busy          Status Off
Button   9     Send/Remove Message    Status None
Button   8     Handset/Headset Mute   Status Off
Button   7     Source                 Status None
Button   6     Start                  Status None
Button   5     Call 5                 Status None
Button   4     Call 4                 Status None
Button   3     Call 3                 Status None
Button   2     Call 2                 Status None
Button   1     Call 1                 Status None
```

Group Coverage Information Report

Print Menu Option: GrpCoverage

```
GROUP COVERAGE INFORMATION

Group #   2   Senders     :        6802 6804
Group #   5   Senders     :          10   11   12   13   14   18   19   20   42
                                     44   45   47 6810

DIRECT GROUP CALLING INFORMATION

Group #  :     770         Group Type : AutoLogout
Call Distribution Type   : CIRCULAR
Delay Announcement Ext # : 11
Message Waiting Station  : 20
Calls-in-queue Threshold : 1
External Alert ext #     : 21
Overflow Threshold (#)   : 1
Overflow to DGC group #  :

Group Coverage :   1

No.    EXT #         LABEL
 1
 2
 3
 4
 5
 6
 7
 8
 9
10
11
12
13
14
15
16
17
18
19
20
```

Group Calling Information Report

Print Menu Option: Grp Calling
Sections: Each programmed group

```
DIRECT GROUP CALLING INFORMATION

Group #  : 782         Group Type : AutoLogout
Call Distribution Type   : CIRCULAR


PryAnn No.     Ext #       LABEL
       1        27         ANN1
       2        28         ANN2

Secondary Announcement Ext # : 29
Time Between Delay Announcements : 0
Repeat Secondary Announcement: NO
Message Waiting Station  : NONE
Queue Control Limit:
Calls-in-queue Threshold 1: 1
Calls-in-queue Threshold 2: 1
Calls-in-queue Threshold 3: 1
External Alert ext #     : NONE
Overflow Threshold (#)   : 1
Overflow Threshold (Time): 0
Prompt Based Overflow Option: NO
Overflow to DGC group #  : NONE

Group Coverage :   1

Member No.    EXT #         LABEL
        1     12
        2     13
        3
        4
        5
        6
        7
        8
        9
       10
       11
       12
       13
       14
       15
       16
       17
       18
       19
       20
LINES:
```

Night Service Information Report

Print Menu Option: Night Servce

```
NIGHT SERVICE INFORMATION

OPERATOR      10    DGCG      #:
                    STNS       :   10
                    LINES      :   801
OPERATOR      14    DGCG      #:
                    STNS       :   14
                    LINES      :   804
OPERATOR      18    DGCG      #:
                    STNS       :   18
                    LINES      :   808
OPERATOR      22    DGCG      #:
                    STNS       :   22
                    LINES      :   822
OPERATOR      42    DGCG      #:
                    STNS       :   42
                    LINES      :   842
Password      :
Current Day   : OFF
              Turn off at:              Turn on at:
  Sunday            :                        :
  Monday            :                        :
  Tuesday           :                        :
  Wednesday         :                        :
  Thursday          :                        :
  Friday            :                        :
  Saturday          :                        :
Emergency Allowed List:
 0)
 1)
 2)
 3)
 4)
 5)
 6)
 7)
 8)
 9)
NS Excluded STNS:
  61   62   63   64   65
Coverage Control Enabled:  YES
```

Group Call Pickup Report

Print Menu Option: Call Pickup

```
GROUP CALL PICKUP

Group #  1  STNS  :  10  11  12  13  I4  15  16
Group #  2  STNS  :  17  18  19  20
Group #  3  STNS  :  21  22  23  24  25  26  27  28  29  30
Group #  4  STNS  :  31
Group #  5  STNS  :  32
Group #  6  STNS  :  33
Group #  7  STNS  :  34
Group #  8  STNS  :  35
Group #  9  STNS  :  36
Group # 10  STNS  :  37
```

Error Log Report

Print Menu Option: Error Log

```
ERROR LOG

Last 30 System Errors:

Message                    ss/pp    Cnt  First        Last       Code
PRI SVC AUDIT TIMEOUT      00/00     -     -     01/08 00:00:53  7001
TIMEOUT COLD START         00/00     -     -     01/11 00:04:08  0001
PRI SVC AUDIT TIMEOUT      00/00     -     -     01/11 00:04:14  7001
TIMEOUT COLD START         00/00     -     -     01/21 00:22:14  0001
PRI SVC AUDIT TIMEOUT      00/00     -     -     01/03 00:22:14  7001
PRI SVC AUDIT TIMEOUT      00/00     -     -     01/04 00:22:14  7001
SOFTWARE COLD START        00/00     -     -     01/04 00:21:14  0003
SOFTWARE COLD START        00/00     -     -     01/04 00:21:14  0003
PRI SVC AUDIT TIMEOUT      00/00     -     -     01/04 00:21:14  7001
SOFTWARE COLD START        00/00     -     -     01/04 00:22:11  0003
PRI SVC AUDIT TIMEOUT      00/00     -     -     01/08 00:00:53  7001
TIMEOUT COLD START         00/00     -     -     02/11 00:04:08  0001
PRI SVC AUDIT TIMEOUT      00/00     -     -     02/11 00:04:14  7001
TIMEOUT COLD START         00/00     -     -     02/21 00:22:14  0001
PRI SVC AUDIT TIMEOUT      00/00     -     -     02/03 00:22:14  7001
PRI SVC AUDIT TIMEOUT      00/00     -     -     02/04 00:22:14  7001
SOFTWARE COLD START        00/00     -     -     02/04 00:21:14  0003
SOFTWARE COLD START        00/00     -     -     02/04 00:21:14  0003
PRI SVC AUDIT TIMEOUT      00/00     -     -     02/04 00:21:14  7001
SOFTWARE COLD START        00/00     -     -     02/04 00:22:11  0003
PRI SVC AUDIT TIMEOUT      00/00     -     -     02/08 00:00:53  7001
TIMEOUT COLD START         00/00     -     -     03/11 00:04:08  0001
PRI SVC AUDIT TIMEOUT      00/00     -     -     03/11 00:04:14  7001
TIMEOUT COLD START         00/00     -     -     03/21 00:22:14  0001
PRI SVC AUDIT TIMEOUT      00/00     -     -     03/03 00:22:14  7001
PRI SVC AUDIT TIMEOUT      00/00     -     -     03/04 00:22:14  7001
SOFTWARE COLD START        00/00     -     -     03/04 00:21:14  0003
SOFTWARE COLD START        00/00     -     -     03/04 00:21:14  0003
PRI SVC AUDIT TIMEOUT      00/00     -     -     03/04 00:21:14  7001
SOFTWARE COLD START        00/00     -     -     03/04 00:22:11  0003
```

Authorization Code Information Report

Print Menu Option: Auth Code

```
SMDR Option for the Account Code Field is Home Extension

Extension          Authorization Code
10                 3124
15                 1357921
20                 6578
23                 443796
```

BRI Information Report

Print Menu Option: BRI Info

```
                BRI INFORMATION

Flexible Timers:
T200 = 1000 ms   T203 = 33 sec   T303 = 4 sec T305 = 30 sec T308 = 4 sec

Fixed Timers and Counters:
T202 = 2 sec   T309 = 90 sec   T310 = 60 sec   T313 = 4 sec
K Cntr = 1     N200 = 3        N201 = 260      N202 = 3

       Line    Service Profile ID       Directory Number
       801     908555100001             9085551000
       802     908555100101             9085551001
       803     908555100201             9085551002
       804     908555100301             9085551003
       805     908555100401             9085551004
       806     908555100501             9085551005
       807     908555100601             9085551006
       808     908555100701             9085551007
```

Non-Local Dial Plan Report

Print Menu Option: NonLcl UDP (Release 6.0 and later systems only)
Sections: Ranges; Patterns

	Range	Ptn	Dgt		Range	Ptn	Dgt		Range	Ptn	Dgt
01)	2400-2449	01	04	18)	5200-5200	11	04	35)	7590-7609	07	04
02)	2550-2559	02	04	19)	5201-5202	12	04	36)	7610-7709	08	04
03)	2560-2569	03	04	20)	5203-5204	13	04	37)	7710-7809	09	04
04)	2570-2589	04	04	21)	5205-5206	14	04	38)	7810-7899	10	04
05)	2590-2609	04	04	22)	5207-5209	15	04	39)	8050-8059	15	04
06)	2610-2649	05	04	23)	5210-5230	03	04	40)	8060-8069	03	04
07)	2650-2679	06	04	24)	5231-5250	17	04	41)	8070-8099	04	04
08)	3100-3109	07	04	25)	5251-5270	18	04	42)	8100-8199	05	04
09)	3110-3129	07	04	26)	6050-6079	14	04	43)	8200-8229	06	04
10)	3130-3159	02	04	27)	7000-7049	12	04	44)	8230-8259	16	04
11)	3160-3179	06	04	28)	7050-7050	20	04	45)	8260-8289	17	04
12)	3180-3199	08	04	29)	7051-7059	01	04	46)	8290-8389	18	04
13)	4000-4025	08	05	30)	7060-7099	02	04	47)	8390-8429	19	04
14)	5000-5049	09	05	31)	7100-7119	03	04	48)	8430-8459	20	04
15)	5050-5079	10	05	32)	7220-7449	04	04	49)	8460-8489	03	04
16)	5080-5099	01	05	33)	7450-7549	05	04	50)	8490-8499	02	04
17)	5100-5199	02	05	34)	7550-7589	06	04				

Pattern 01:

Pool	Absorb	Other Digits	FRL	Call type
1)3870	00		0	BOTH
2)3892	00		0	BOTH
3)3893	00		0	BOTH
4)3894	00		0	BOTH

Pattern 02:

Pool	Absorb	Other Digits	FRL	Call type
1)4590	00		2	BOTH
2)4592	00		2	VOICE
3)3893	00		0	BOTH
4)3894	00		0	BOTH
.	.		.	.
.	.		.	.

Pattern 20:

Pool	Absorb	Other Digits	FRL	Call type
1)4591	00		3	DATA
2)4592	00		3	DATA
3)3894	00		3	BOTH
4)3870	00		4	BOTH

Service Observing Information Report

Print Menu Option: ServiceObs (Release 6.1 and later systems only)

```
      SERVICE OBSERVING INFORMATION

GROUP # : 1
Service Observer:   1110
Give Warning Tone: No

Members                 1111  1112  1113  1114  1115  1116  1117  1118

.
.
.
GROUP # : 16
Service Observer:   2110
Give Warning Tone: Yes

Members                 2111  2115  2121  2130  2131  2136  2140  2144
```

General System Programming Sequence

G

This appendix lists the basic procedures, in the order in which they must be performed, to program a new system. In some instances, you may need to rearrange the system planning forms to match this order.

NOTE:
If your MERLIN LEGEND System is part of a private network, see the *Network Reference* for additional programming that is required.

Basic System Operating Conditions

- Select the system programming position.

  System→SProg Port

- Select the system language.

  More→*Language→SystemLang*

- Select the system mode.

  System→Mode

- Enable Automatic Maintenance Busy.

  System→MaintenBusy

- Set the system time.

  System→Time

- Set the system date.

  System→Date

- Schedule automatic backups.

  System→Backup/Restore→Auto Backup

System Renumbering

- Select the system numbering plan.

  SysRenumber→Default Numbering

- Single renumbering.

  SysRenumber→Single

- Block renumbering.

  SysRenumber→Block

- DSS console page buttons.

  *SysRenumber→Single→*__More__*→DSS Buttons*

Identify System Operator Positions

- Identify QCC system operator positions.

  Operator→Positions→Queued Call

- Identify DLC system operator positions.

  Operator→Positions→Direct Line

Lines and Trunks

- Specify type of trunk on 400 or 800 GL/LS module.

  LinesTrunks→LS/GS/DS1

- Identify dial signaling for loop-start/ground-start trunks.

  LinesTrunks→TT/LS Disc→Outmode

- Classify disconnect signaling reliability for loop-start trunks.

  LinesTrunks→TT/LS Disc→LS Disconnect

- Specify toll prefix requirements.

  LinesTrunks→Toll Type

- Specify Hold Disconnect interval.

  *LinesTrunks→***More***→HoldDiscnct*

- Assign the QCC queue priority.

  *LinesTrunks→***More***→QCC Prior*

- Identify QCC operator to receive calls.

  *LinesTrunks→***More***→QCC Oper*

- Assign trunks to pools.

  LinesTrunks→Pools

Complex Lines

- Program DS1 trunks.

  LinesTrunks→LS/GS/DS1

- Program tie lines.

  LinesTrunks→TIE Lines

- Program DID trunks.

  LinesTrunks→DID

- Program PRI trunks.

  LinesTrunks→PRI

- Program BRI trunks.

  LinesTrunks→BRI

Telephones

Many system managers prefer to program auxiliary equipment before programming telephones.

- Assign trunks to telephones.

  Extensions→LinesTrunks

- Copy trunk assignments.

  Extensions→Line Copy

- Identify principal user for personal line.

  *LinesTrunks→***More***→PrncipalUsr*

- Assign ring, voice, outgoing only, shared buttons.

  More*→Cntr□Prg*

- Copy telephone button assignments.

  More*→Cntr□Prg*

- Identify analog multiline telephones with BIS or HFAI.

  Extensions→BIS/HFAI

- Identify analog multiline telephones requiring Voice Announce to Busy.

  Extensions→VoiceSignl

Auxiliary Equipment

- Program Music On Hold.

  AuxEquip→MusicOnHold

- Program loudspeaker paging.

  AuxEquip→Ldspkr Pg

- Program a fax port.

  AuxEquip→Fax

- Identify the jack used for maintenance alarms.

  AuxEquip→MaintAlarms

- Program voice mail and automated attendant.

  AuxEquip→VMS/AA→TransferRtn

Print Reports

- Print system reports to simplify checking your work and to provide a paper copy of the system configuration.

  More→*Print*

Programming Special Characters

H

This appendix explains the special characters used in dialing sequences for numbers that are dialed automatically, such as on Auto Dial buttons. The characters allowed depend on the type of telephone.

Single-Line Telephones

Some dialing sequences need special characters. For example, the user presses and releases either the **Recall** or **Flash** button or the switchhook to insert a Pause character in a dialing sequence after a dial-out code to allow the system to seize an outside line/trunk before dialing the number.

Table H–1. Special Characters for Single-Line Telephones

Press ...	Means ...
Recall, **Flash**, or switchhook*	**Pause.** Inserts a 1.5-second pause in the dialing sequence. Multiple consecutive pauses are allowed.
#	**End of Dialing.** Used to signal the end of the dialing sequence or to separate one group of dialed digits from another, such as an account code from a telephone number.

* On single-line telephones with positive or timed disconnect (such as the 2500YMGL) the **Recall** or **Flash** button, instead of the switchhook, must be used.

Analog Multiline Telephones

Some dialing sequences need special characters. For example, the user presses **Hold** to insert a Pause character after the dial-out code in a dialing sequence to allow the system to seize an outside line before dialing the number. A Pause character can also be used to separate a telephone number from an extension number.

Table H–2. Special Characters for Analog Multiline Telephones

Press ...	See*...	Means ...
Drop†	s	**Stop.** Inserts a Stop within a sequence of automatically dialed numbers. For example, an outside Auto Dial button may be programmed with a password, then a Stop, then a telephone number. To use Auto Dial with a Stop in the sequence, the user presses the button to dial the password, listens for the dialing and connection, and presses the button again to dial the number.
Hold	p	**Pause.** Inserts a 1.5-second pause in the dialing sequence. Multiple consecutive pauses are allowed.
Conference†	f	**Flash.** Sends a switchhook flash. Must be the first entry in the dialing sequence.
##	#	**End of Dialing for Auto Dial buttons.** Used at the end of a dialing sequence to indicate that the user has finished dialing or to separate one group of dialed digits from another.
#	#	**End of Dialing.** Used at the end of a dialing sequence to indicate that the user has finished dialing or to separate one group of dialed digits from another.

* Display telephones only

† Not available on MLC-5, MDC 9000, and MDW 9000 cordless and cordless/wireless telephones

MLX-10 and MLX-5 Nondisplay Telephones

Some dialing sequences need special characters. For example, the user presses **Hold** to insert a Pause character after the dial-out code in a dialing sequence to allow the system to seize an outside line before dialing the number. A Pause character can also be used to separate a telephone number from an extension number.

Table H–3. Special Characters for MLX-10 and MLX-5 Nondisplay Telephones

Press ...	Means ...
Drop	**Stop.** Halts the dialing sequence to allow for system response.
Hold	**Pause.** Inserts a 1.5-second pause in the dialing sequence. Multiple consecutive pauses are allowed.
Conf	**Flash.** Sends a switchhook flash. Must be the first entry in the dialing sequence.
#	**End of Dialing for extension programming only.** Used at the end of a dialing sequence to indicate that the user has finished dialing or to separate one group of dialed digits from another.
##	**End of Dialing.** Used to signal the end of the dialing sequence or to separate one group of dialed digits from another.

MLX Display Telephones

Some dialing sequences need special characters. For example, the user presses **Hold** to insert a Pause character in a dialing sequence after a dial-out code to allow the system to seize an outside line before dialing the number. A Pause character can also be used to separate a telephone number from an extension number.

Table H–4. Special Characters for MLX Display Telephones

Press ...	See ...	Means ...
Drop	s	**Stop.** Halts the dialing sequence to allow for system response.
Hold	p	**Pause.** Inserts a 1.5-second pause in the dialing sequence. Multiple consecutive pauses are allowed.
Conf	f	**Flash.** Sends a switchhook flash. Must be the first entry in the dialing sequence.
#	#	**End of Dialing for extension programming only.** Used at the end of a dialing sequence to indicate that the user has finished dialing or to separate one group of dialed digits from another.
##	#	**End of Dialing.** Used to signal the end of the dialing sequence or to separate one group of dialed digits from another.

Glossary

Italics

The use of italics in the glossary denotes multiple usage of the italicized text throughout the glossary.

Numerics

2B data Digital information carried by two *B-channels* for better performance and quality; the *bit rate* is twice that of one B-channel used alone.

7500B data module See *ISDN 7500B Data Module*.

A

account code Code used to associate incoming and outgoing calls with corresponding accounts, employees, projects, and clients.

ACCUNET AT&T's switched digital service for 56-kbps, 64-kbps restricted, and 64-kbps clear circuit-switched data calls.

address A coded representation of the destination of data or of the data's originating terminal, such as the dialed extension number assigned to the data terminal. Multiple terminals on one communications line must each have a unique address.

ADDS (Automated Document Delivery System) Computer-based application that stores documents in a database and automatically faxes them on request.

adjunct Optional equipment used with the communications system, such as an alerting device or *modem* that connects to a multiline telephone or to an extension jack.

ALS (Automatic Line Selection) Programmed order in which the system makes outside lines available to a user.

ambiguous numbering Numbering of extension ranges, remote access codes, or other system components that causes conflicts in network operations. These numbers can be unique and still be ambiguous. For example, Extension 441 is different from Extension 4410. However, for *UDP routing* purposes, the two numbers are ambiguous and a call intended for Extension 4410 is misrouted on the first three digits sent, to Extension 441. See also *unambiguous numbering*.

AMI (alternate mark inversion) Line coding format in which a binary one is represented by a positive or negative pulse, a binary zero is represented by no line signal, and subsequent binary ones must alternate in polarity; otherwise, a *bipolar violation* occurs. AMI is used in the *DS1* interface.

Analog data station See *modem data station.*

analog multiline telephone Also known as the MERLIN multiline telephone. A telephone that transmits and receives analog signals and has a number of line buttons.

analog transmission Mode of transmission in which information is represented in continuously variable physical quantities, such as amplitude, frequency, phase, or resistance. See also *digital transmission*.

ANI (Automatic Number Identification) Process of automatically identifying a caller's billing number and transmitting that number from the caller's local central office to another point on or off the public network.

application Software and/or hardware that adds functional capabilities to the system. For example, MERLIN Identifier is an application that provides caller identification information (if available in the local area or jurisdiction).

ARS (Automatic Route Selection) System feature that routes calls on outside facilities according to the number dialed and line/trunk availability. To initiate ARS, the user dials a *dial-out code*, also called an "ARS access code."

ASCAP (American Society of Composers, Artists, and Producers)

Ascend Pipeline 25PX/75PX An ISDN-BRI bridge/router that enables high-speed Internet access over a digital facility. It makes outgoing calls only.

ASN (AT&T Switched Network) AT&T telecommunications services provided through an Integrated Digital Services Network Primary Rate Interface (ISDN-PRI) trunk, *Accunet* switched digital service, *Megacom*, *Megacom 800*, Software Defined Network (*SDN*), Multiquest, and Shared Access for Switch Services (SASS).

asynchronous data transmission A method of transmitting a short bitstream of digital data, such as printable characters represented by a 7- or 8-*bit* ASCII code. Each string of data bits is preceded by a start bit and followed by a stop bit, thus permitting data to be transmitted at irregular intervals. See also *synchronous data transmission*.

AT&T Attendant Application with equipment that connects to one or more *tip/ring* extension jacks and automatically answers incoming calls with a recorded announcement; directs calls in response to touch tones.

AT&T Switched Network See *ASN*.

AUDIX Voice Power A voice-processing application, part of *IS II/III*, that provides Automated Attendant, Call Answer, Information Service, Message Drop, Voice Mail, and, optionally, *Fax Attendant System* for use with the system.

Automated Attendant *IS II/III*, *MERLIN LEGEND Mail*, and *Lucent Technologies Attendant* application that automatically answers incoming calls with a recorded announcement and directs callers to a department, an extension, or the system operator.

Automated Document Delivery System See *ADDS*.

automatic immediate cycling Process that occurs in private network when all available routes for a call specify systems with matching *switch identifiers*. The call is routed from the originating system to the destination system and back to the originating system in a continuous loop. *Switch identifiers* labelling systems must be unique across a network.

Automatic Line Selection See *ALS*.

Automatic Number Identification See *ANI*.

automatic ringdown tie-trunk See *automatic-start tie trunk*.

Automatic Route Selection See *ARS*.

automatic-start tie trunk *Tie trunk* on which incoming calls are routed to an operator or other designated destination without a start signal, as soon as the trunk is seized; the destination is specified during programming. Also called “automatic ringdown” or “auto-in” tie trunk.

auxiliary power unit Device that provides additional power to the system.

B

B8ZS (bipolar 8 zero substitution) Line-coding format that encodes a string of eight zeros in a unique binary sequence to detect bipolar violations.

backup Procedure for saving a copy of system programming onto a floppy disk or *memory card*. See also *restore.*

bandwidth Difference, expressed in hertz, between the highest and lowest frequencies in a range that determines channel capacity.

barrier code Password used to limit access to the *Remote Access* feature of the system. In a *private network*, it is especially important that barrier codes be required for all types of remote access.

basic carrier Hardware that holds and connects the *processor module*, *power supply module*, and up to five other modules in the system. See also *expansion carrier*.

baud rate Strictly speaking, a measurement of transmission speed equal to the number of signal level changes per second. In practice, often used synonymously with *bit rate* and *bps*.

B-channel (Bearer-channel) 64- or 56-kbps channel that carries a variety of digital information streams, such as voice at 64 kbps, data at up to 64 kbps, wideband voice encoded at 64 kbps, and voice at less than 64 kbps, alone or combined.

Basic Rate Interface See *BRI*.

Bearer-channel See *B-channel*.

Behind Switch mode One of three modes of system operation, in which the control unit is connected to (behind) another telephone switching system, such as *Centrex* or DEFINITY, which provides features and services to telephone users. See also *Hybrid/PBX mode* and *Key mode*.

binary code Electrical representation of quantities or symbols expressed in the base-2 number system, which includes zeros and ones.

bipolar 8 zero substitution See *B8ZS.*

bipolar signal Digital signal in which pulses (ones) alternate between positive and negative. See also *AMI*, *B8ZS*, and *bipolar violation*.

bipolar violation Condition occurring when two positive or two negative pulses are received in succession. See also *AMI* and *B8ZS*.

BIS (Built-In Speakerphone) Part of the model name of some analog multiline telephones.

bit (binary digit) One unit of information in binary notation; it can have one of two values, zero or one.

bit rate Speed at which bits are transmitted, usually expressed in *bps*. Also called “data rate.”

blocking Condition in which end-to-end connections cannot be made on calls because of a full load on all possible services and facilities. See also *glare.*

BMI (Broadcast Music Incorporated)

board A module, for example, 100D or 408 MLX GS/LS, that allows you to connect lines/trunks and extensions to the communications system.

board assignment System Programming and Maintenance (SPM) procedure for assigning line/trunk and extension modules to slots on the control unit.

board renumbering System programming procedure for renumbering boards that have already been assigned to specific slots on the control unit.

BRI (Basic Rate Interface) A standard protocol for accessing Integrated Service Digital Network (ISDN) services.

broadband Transmission path having a bandwidth greater than a voice-grade channel.

BTMI (basic telephone modem interface)

bus Multiconductor electrical path used to transfer information over a common connection from any of several sources to any of several destinations.

button Key on the face of a telephone that is used to access a line, activate a feature, or enter a code on a communications system.

byte Sequence of *bit*s (usually eight) processed together. Also called “octet.”

C

Call Accounting System See *CAS*.

Call Accounting Terminal See *CAT*.

Caller ID A service provided by some local telephone companies (if local regulations allow) that supplies the calling party telephone number. In Release 3.0 and later, an 800 GS/LS-ID module on the system can capture this information and display it on the screens of MLX telephones. See also *ANI*.

Calling group Team of individuals who answer the same types of calls.

Call Management System See *CMS*.

CAS (Call Accounting System) DOS- or UNIX System-based application that monitors and manages telecommunications costs.

CAT (Call Accounting Terminal) Standalone unit with a built-in microprocessor and data buffer that provides simple call accounting at a low cost.

CCITT (International Telegraph and Telephone Consultative Committee)

CCS (common-channel signaling) Signaling in which one channel of a group of channels carries signaling information for each of the remaining channels, permitting each of the remaining channels to be used to nearly full capacity. In the system's 100D module, channel 24 can be designated as the signaling channel for channels 1–23.

centralized telephone programming Programming of features on individual telephones; performed at a central location by the system manager. See also *system programming* and *extension programming.*

Centralized Voice Messaging The sharing of a voice messaging system by two or more directly connected MERLIN LEGEND systems in a private network. Available beginning in Release 6.1.

central office See *CO*.

Centrex Set of system features to which a user can subscribe on telephone trunks from the local telephone company.

channel Telecommunications transmission path for voice and/or data.

channel service unit See *CSU*.

checksum Sum of ones in a sequence of ones and zeros used to detect or correct errors in data transmission.

circuit-switched data call Data call made through an exclusively established and maintained connection between *data stations*.

class of restriction See *COR*.

clear data channel Clear data channels (also called unrestricted data channels) allow the transmission of occurrences of more than seven contiguous zero bits. If a clear data channel is requested and only restricted channels are available, the call will be rejected. See also restricted data channel.

clock synchronization When digital signals are transmitted over a communications link, the receiving end must be synchronized with the transmitting end to receive the digital signals without errors using clock synchronization. A system synchronizes itself by extracting a timing signal from an incoming digital stream. All the digital facilities in a network operate from a single common clock, preferably a port connected to a digital *PSTN* facility on a *hub system* or a system that connects two network systems. In this case, all digital facilities specify a loop clock source. One system in a network may be specified as a local clock source when no functioning digital facility in the network is connected to the *PSTN.* All other digital facilities then use this clock and specify their clock sources as loop. Primary, secondary, and tertiary clock sources are specified to allow backup synchronization in the event that the primary source is out of service.

CMS (Call Management System) DOS-based application that simulates the actions of a system operator by answering and distributing calls. Also produces reports for call analysis.

CO (central office) Location of telephone switching equipment that provides local telephone service and access to toll facilities for long-distance calling.

coaxial cable Cable consisting of one conductor, usually a small copper tube or wire within and insulated from another conductor of larger diameter, usually copper tubing or copper braid.

codec (coder-decoder) Device used to convert analog signals such as speech, music, or television to digital form for transmission over a digital medium and back to the original analog form.

collected digits Digits that a caller dials in response to an integrated voice response application's menus (also called *prompted digits*); collected digits may be used to initiate *screen pop* at a system extension. See also *CTI link*.

combination configuration A *private network* arrangement that combines characteristics of *Virtual Private Network* (*VPN)*, a *series configuration,* and a *star configuration.*

common channel signaling See *CCS*.

communications system Software-controlled processor complex that interprets dialing pulses, tones, and/or keyboard characters and makes the proper interconnections both inside and outside. Consists of a computer, software, a storage device, and carriers with special hardware to perform the actual connections. Provides voice and/or data communications services, including access to public and private networks, for telephones and other equipment. Also referred to in this guide as "system," short for MERLIN LEGEND Communications System.

control unit *Processor module*, *power supply module*, other *modules*, *carriers*, and housing of the system.

console Telephone and *adjuncts* (if any) at operator or system programmer extension.

CONVERSANT Entry-level voice response application that automatically answers and routes calls and executes telephone transactions.

conversion resource See *modem pool*.

coordinating system manager In a *private network* that includes more than two systems, the system manager who acts as a clearinghouse for any changes made on local systems, that effect the network, assuring that all system managers work together and that local system changes do not have undesirable effects on the network as a whole.

COR (class of restriction) Various types of restrictions that can be assigned to *remote access* trunks or barrier codes. These restrictions consist of calling restrictions, *ARS* Facility Restriction Levels (*FRL*s), Allowed Lists, Disallowed Lists, and Automatic Callback queuing.

Coverage Set of system features that can determine how extensions' calls are covered when the person at the extension is busy or not available.

CRC (cyclic redundancy check) An error-detection code used on *DS1* facilities with the extended superframe format (*ESF*).

CSU (channel service unit) Equipment used on customer premises to provide *DS1* facility terminations and signaling compatibility.

CTI link (Computer Telephony Integration) link. A hardware/software feature that is part of the PassageWay Telephony Services application. It allows the use of Lucent Technologies-certified software applications on a *LAN* running Novell NetWare software in a *Hybrid/PBX mode* system. These applications may provide special features for client control of such calling activities as power dialing. See also *screen pop.*

cyclic redundancy check See *CRC*.

D

D4 framing format *Framing format* consisting of a sequence of individual frames of 24 eight-*bit* slots and one signal bit (193 bits) in a 12-frame superframe. See also *ESF*.

Data-channel See *D-channel*.

data communications equipment See *DCE*.

data module A type of *ISDN terminal adapter* that acts as the *DCE* at a *data workstation* that communicates over high-speed *digital* facilities.

data rate See *bps*.

data station Special type of extension where data communications take place; includes *DTE* and *DCE*; sometimes a telephone is also part of a data station.

data terminal An input/output device (often a personal computer) that can be connected to the control unit via an interface.

data terminal equipment See *DTE* and *data terminal*.

data workstation Special type of extension where data communications take place; includes *DTE* and *DCE*; sometimes a telephone is also part of a data workstation.

DCE (data communications equipment) Equipment such as *modems* or ISDN terminal adapters used to establish, maintain, and terminate a connection between the system and data terminal equipment (*DTE*), such as printers, personal computers, host computers, or network workstations.

DCP (Digital Communications Protocol) AT&T proprietary protocol to transmit digitized voice and data over the same communications link.

D-channel (Data-channel) 16- or 64-kbps channel that carries signaling information or data on a *PRI* or *BRI*.

dedicated feature buttons The imprinted feature buttons on a telephone: **Conf** or **Conference**, **Drop**, **Feature**, **HFAI** (Hands Free Answer on Intercom), **Hold**, **Message**, **Mute** or **Microphone**, **Recall**, **Speakerphone** or **Spkrphone**, and **Transfer**.

delay-start tie trunk *Tie trunk* or *tandem tie trunk* on which the originating end of the tie trunk transmits an off-hook signal to the receiving end and waits for the receiving end to send an off-hook signal followed by an on-hook signal. Also called “dial-repeating tie trunk.”

desktop videoconferencing system A system application that allows face-to-face, simultaneous video and voice communications between individuals and requires high-speed data transmission facilities. See also *group videoconferencing system.*

DFT (direct facility termination) See *personal line*.

DHG (data hunt group) Group of analog or digital *data stations* that share a common access code. Calls are connected in a round-robin fashion to the first available data station in the group.

dial access See *feature code*.

Dialed Number Identification Service See *DNIS*.

dial-out code Digit (usually a 9) or digits dialed by telephone users to get an outside line.

dial plan Numbering scheme for system extensions, lines, and trunks.

dial-repeating tie trunk *Tie trunk* on which the originating end of the tie trunk transmits an off-hook signal to the receiving end and waits for the receiving end to send an off-hook signal followed by an on-hook signal. Also called “dial-repeating tie trunk.”

DID (Direct Inward Dial) Service that transmits from the telephone company central office and routes incoming calls directly to the called extension, *calling group*, or outgoing line/trunk *pool*, bypassing the system operator.

DID trunk Incoming trunk that receives dialed digits from the local exchange, allowing the system to connect directly to an extension without assistance from the system operator.

digital Representation of information in discrete elements such as off and on or zero and one. See also *analog transmission*.

Digital Communications Protocol See *DCP*.

digital data station See *ISDN terminal adapter data station.*

Digital Signal 0 See *DS0*.

Digital Signal 1 See *DS1*.

digital subscriber line See *DSL*.

digital switch element See *DSE*.

digital transmission Mode of transmission in which the information to be transmitted is first converted to digital form and then transmitted as a serial stream of pulses. See also *analog transmission*.

DIP switch (dual in-line package) Switch on a 400EM module used to select the signaling format for tie-line transmission. Also used on other equipment for setting hardware options.

direct facility termination (DFT) See *personal line*.

Direct Inward Dial See *DID.*

Direct-Line Console See *DLC*.

Direct Station Selector See *DSS*.

display buttons Buttons on an MLX display telephone used to access the telephone's display.

DLC (Direct-Line Console) Telephone used by a system operator to answer outside calls (not directed to an individual or a group) and inside calls, transfer calls, make outside calls for users with outward calling restrictions, set up conference calls, and monitor system operation.

DNIS (Dialed Number Identification Service) Service provided by AT&T and MCI; it routes incoming 800 or 900 calls according to customer-selected parameters, such as area code, state, or time of call.

door answering unit Device connected to a basic telephone jack and used at an unattended extension or front desk.

DOS (disk operating system)

drop-and-insert equipment A device that can be installed between systems connected by *tandem PRI trunks* or T1-emulated *tandem tie trunks* to allow fractional use of the facility, that is, use of fewer than 23 of the PRI *B-channels* or fewer than 24 of the T1 *channels*. In a PRI facility, the equipment must never drop Channel 24, the *D-channel*. All channels must still be programmed and all count towards the system maximum of 80 lines.

DS0 (Digital Signal 0) Single 64-kbps voice or data channel.

DS1 (Digital Signal 1) *Bit*-oriented signaling interface that multiplexes twenty-four 64-kbps channels into a single 1.544-Mbps stream.

DSL (Digital Subscriber Line) A Digital Subscriber Line provides full-duplex service on a single twisted metallic pair (2-wire) at a rate sufficient to support ISDN Basic Rate Access.

DSS (Direct Station Selector) 60-button *adjunct* that enhances the call-handling capabilities of an MLX-20L or MLX-28D telephone used as an operator console.

DTE (data terminal equipment) Equipment that makes the endpoints in a connection over a data connection; for example, a data terminal, personal computer, host computer, or printer.

DTMF signaling (dual-tone multifrequency signaling) Touch-tone signaling from telephones using the voice transmission path. DTMF signaling provides 12 distinct signals, each representing a dialed digit or character, and each composed of two voiceband frequencies.

E

E&M signaling Trunk supervisory signaling, used between two communications systems, in which signaling information is transferred through two-state voltage conditions (on the Ear and Mouth leads) for analog applications and through two *bits* for digital applications. See also *tie trunk*.

EIA (Electronic Industries Association)

EIA-232-D Physical interface, specified by the *EIA*, that transmits and receives asynchronous data at speeds of up to 19.2-kbps over cable distances of 50 feet (15 m).

Electronic Switching System See *ESS*.

endpoint Final destination in the path of an electrical or telecommunications signal.

Enhanced Service Center An application that sends calls to available agents in a calling group. The Enhanced Service Center places calls in queue, plays announcements, tracks agent activity and availability, and provides real-time reports.

ESF (extended superframe format) *PRI* framing format consisting of individual frames of 24 eight-bit slots and one signal bit (193 bits) in a 24-frame extended superframe.

ESS (Electronic Switching System) Class of central office (*CO*) switching systems developed by Lucent Technologies in which the control functions are performed principally by electronic data processors operating under the direction of a stored program.

expansion carrier Carrier added to the control unit when the basic carrier cannot house all of the required modules. Houses a power supply module and up to six additional modules.

ExpressRoute 1000 Data communications device that allows connection between an RS-232 *DTE* device and the control unit using MLX extension jacks on the 008 MLX or 408 GS/LS-MLX module.

extended superframe format See *ESF*.

extension An endpoint on the internal side of the communications system. An extension can be a telephone with or without an adjunct. Also called “station.” See also *data workstation.*

extension jack An analog, digital, or *tip/ring* physical interface on a module in the control unit for connecting a telephone or other device to the system. Also called “station jack.”

extension programming Programming performed at an extension to customize telephones for personal needs; users can program features on buttons, set the telephone ringing pattern, and so on. See also *centralized telephone programming* and *system programming*.

F

facility Equipment (often a *line/trunk*) constituting a telecommunications path between the system and the telephone company central office (*CO*).

Facility Restriction Level See *FRL*.

factory setting Default state of a device or feature when an optional setting is not programmed by the user or system manager.

fax (facsimile) Scanning and transmission of a graphic image over a telecommunications facility, or the resulting reproduced image, or the machine that does the scanning and transmitting.

Fax Attendant System Fax handling and processing application available with *AUDIX Voice Power*.

FCC (Federal Communications Commission)

feature Function or service provided by the system.

feature code Code entered on a dialpad to activate a feature.

feature module Prior to Release 3.0, a circuit pack inserted into the *processor module*, used to provide system features and replaced when the system is upgraded.

Feature screen Display screen on MLX display telephones; provides quick access to commonly used features.

ferrite core Attachment to the AC power cord and ground wire of the carrier power supply for compliance with FCC, part 15 requirements.

Flash ROM Beginning with Release 3.0, a type of read-only memory provided on the *processor module*, used to supply system features.

foil shield Copper foil sheet (for power units) used to prevent excessive noise on the module.

forced idle Condition of the system during certain programming or maintenance procedures; system prevents initiation of new calls.

foreign exchange See *FX*.

Fractional-T1 A digital transmission facility consisting of at least one, and fewer than 24 *DS0* channels using robbed-bit signaling and connecting a *PBX* and a *central office* or toll office.

frame One of several segments of an analog or digital signal that has a repetitive characteristic. For example, a *DS1* frame consists of a framing *bit* and 24 bytes, which equals 193 bits.

framing format Pattern of *frames* used in transmissions.

frequency generator See *ring generator*.

FRL (Facility Restriction Level) Calling restriction type that restricts calls to certain specified *ARS* and *UDP* routes.

FX (Foreign exchange) Central office (*CO*) other than the one that is providing local access to the public telephone network.

G

General Purpose Adapter See *GPA*.

glare Condition that occurs when a user tries to call out on a *loop-start line* at the same time that another call arrives on the same line.

GPA (General Purpose Adapter) Device that connects an analog multiline telephone to optional equipment such as an answering machine or a fax machine.

ground-start trunk Trunk on which the communications system, after verifying that the trunk is idle (no ground on tip lead), transmits a request for service (puts ground on ring lead) to the telephone company central office (*CO*).

Group IV (G4) fax machine A fax unit, offering 400 by 100 dots per inch (DPI) in fine mode, that can operate at any speed for communication with a Group III (G3) fax machine or another Group IV (G4) fax machine.

group videoconferencing system A system application that allows face-to-face, simultaneous video and voice communications between groups and requires high-speed data transmission facilities. See also *desktop videoconferencing system.*

H

Hands-Free Answer on Intercom See *HFAI*.

hands-free unit See *HFU*.

headset Lightweight earpiece and microphone used for hands-free telephone operation.

HFAI (Hands-Free Answer on Intercom) Feature that allows a user to answer a voice-announced call.

HFU (Hands-Free Unit) Unit for analog multiline telephones that allows users to make and receive calls on the speakerphone without using the handset.

Home screen Display normally shown on an MLX display telephone; shows time, date, and call information, and shows when some features are in use.

host Telephone company or other switch providing features and services to the system users, usually when the system is operating in *Behind Switch mode*.

hub system In *private network* that is arranged in a *star configuration*, the communications system through which all calls across the network pass.

Hybrid/PBX mode One of three modes of system operation, in which the system uses line/trunk *pools* and *ARS* in addition to *personal lines*. Provides a single interface (**SA** buttons) to users for both internal and external calling. See also *Behind Switch mode* and *Key mode*.

I

ICLID	(Incoming Call Line Identification) See *Caller ID*.
ICOM buttons	(intercom buttons) Telephone buttons that provide access to inside system lines for calling other extensions or receiving calls from them.
immediate-start tie trunk	*Tie trunk* on which no start signal is necessary; dialing can begin immediately after the trunk is seized.
in-band signaling	See *robbed-bit signaling*.
inside dial tone	A tone users hear when they are off-hook on an ***SA*** or ***ICOM*** *button*.
Inspect screen	Display screen on an MLX display telephone that allows the user to preview incoming calls and see a list of the features programmed on line buttons.
Integrated Administration	Capability of *IS III* that simplifies the programming of common information for the system, *AUDIX Voice Power*, and, if it is also installed, *Fax Attendant System*.
Integrated Services Digital Network	See *ISDN*.
Integrated Solution II/III	See *IS II/III*.
Integrated Voice Power Automated Attendant	*IS II* application that automatically answers incoming calls with a recorded announcement and directs callers to a department, an extension, or the system operator.
intercom buttons	See ***ICOM*** *buttons.*
interface	Hardware and/or software that links systems, programs, or devices.
intersystem calls	In a *private network*, calls between a local extension and a *local or non-local dial plan* extension.
Intuity	A set of integrated applications that provides voice mail, fax messaging, automated attendant, call accounting, and system programming.
Intuity CONVERSANT	Voice response application that automatically answers and routes calls and executes telephone transactions.
I/O device	(input/output device) Equipment that can be attached to a computer internally or externally for managing a computer system's input and output of information.
IROB protector	(In-Range Out-of-Building protector) Surge-protection device for off-premises telephones at a location within 1000 feet (305 m) of cable distance from the control unit.

IS II/III (Integrated Solution II or Integrated Solution III) Set of UNIX System-based applications that augments and provides additional services using the system. IS II and III are no longer available.

ISDN (Integrated Services Digital Network) Public or private network that provides end-to-end digital connectivity for all services to which users have access by a limited set of standard multipurpose user and *network interfaces*; provides digital circuit-switched or packet-switched connections within the network and to other networks for national and international digital connectivity.

ISDN 7500B Data Module Data communications device that allows connection between an RS-232 *DTE* device and the control unit by MLX extension jacks on the 008 MLX or 408 GS/LS-MLX module.

ISDN terminal adapter (Integrated Services Digital Network terminal adapter) A device that connects the communications system with *data terminal equipment (DTE)*.

ISDN terminal adapter data station A type of data station that includes an ISDN terminal adapter as its DCE. It may also include an MLX telephone for simultaneous voice and data (ISDN terminal adapter data-only station). These data stations connect to MLX extension jack modules for digital transmission of data over a DS1 facility.

J

jack Physical connection point to the system for a telephone, line/trunk, or other device. Also called “port.”

K

kbps (kilobits per second)

Key mode One of three modes of system operation, in which the system uses personal lines on line buttons for outside calls, with a separate interface (***ICOM** buttons*) for inside calling. See also *Behind Switch mode* and *Hybrid/PBX mode.*

L

LAN (local area network) Arrangement of interconnected personal computers or terminals, sometimes accessing a host computer, sometimes sharing resources such as files and printers.

LDN (Listed Directory Number)

LED (light-emitting diode) Semiconductor device that produces light when voltage is applied; light on a telephone.

line Connection between extensions within the communications system; often, however, used synonymously with *trunk*.

line and trunk assignment Assignment of lines and trunks connected to the system control unit to specific buttons on each telephone.

line coding Pattern that data assumes as it is transmitted over a communications channel.

line compensation Adjustment for the amount of cable loss in decibels (dB), based on the length of cable between a 100D module and a channel service unit (*CSU*) or other far-end connection point.

line/trunk Refers to inside system lines and outside lines/trunks in general terms. See also *line* and *trunk*.

line/trunk jack Physical interface on a module in the control unit for connecting an outside line/trunk to the communications system. Also called “trunk jack.”

line/trunk and extension module Module on which the jacks for connecting central office lines/trunks and/or the jacks for connecting the extensions are located.

local dial plan In a system that is part of a *private network*, a list of extension ranges that the local system refers to in order to route local *intersystem calls via UDP*.

local extension In a system that is part of a *private network*, an extension that is listed in the system’s *local dial plan*.

local host computer access A method for connecting an extension jack to an on-site computer for data-only calls through a *modem* or *ISDN terminal adapter*.

local loop The two-way connection between a customer’s premises and the central office (*CO*).

local user In a *private network*, a person whose extension is connected to the local control unit.

logical ID Unique numeric identifier for each *extension* and *line/trunk jack* in the system control unit.

loop-start line Line on which a closure between the tip and ring leads is used to originate or answer a call. High-voltage 20-Hz AC ringing current from the central office signals an incoming call.

Lucent Technologies Attendant Application with equipment that connects to one or more *tip/ring* (*T/R*) extension jacks and automatically answers incoming calls with a recorded announcement; directs calls in response to touch tones. This application is no longer available.

M

Magic on Hold A Lucent Technologies Music On Hold enhancement that promotes a company's products or services.

Mbps (megabits per second)

Megacom The AT&T tariffed digital *WATS* offering for outward calling.

Megacom 800 The AT&T tariffed digital 800 offering for inward calling.

memory card Storage medium, similar in function to a floppy disk, that allows information to be added to or obtained from the communications system through the PCMCIA interface slot on the processor module.

MERLIN Identifier Adjunct that allows users to receive, store, and use information provided by Caller ID.

MERLIN LEGEND Mail A voice messaging system that provides automated attendant, call answering, and voice-mail services. It is housed in its own module.

MERLIN MAIL A voice messaging system that provides automated attendant, call answering, and voice-mail services. No longer available.

Messaging 2000 A voice messaging system housed in a PC that connects to tip/ring ports on the system's modules. Messaging 2000 provides voice mail, automated attendant, call answering, and fax messaging.

MFM (Multi-Function Module) Adapter that has a *tip/ring* mode for answering machines, modems, fax machines, and tip/ring alerts, and an *SAA* mode for -48 VDC alerts. It is installed inside an MLX telephone and is used to connect optional equipment to the telephone. The optional equipment and the telephone operate simultaneously and independently.

MLX telephone A multiline button telephone that transmits and receives digital signals.

mode codes Streams of touch-tone codes used by voice messaging applications to communicate with the system's control unit.

modem Device that converts digital data signals to analog signals for transmission over a telephone line, and analog signals received on a telephone line to digital signals.

modem data station A type of data station that includes a modem as its DCE. It may also include an MLX telephone for simultaneous voice and data (MLX voice and modem data station), an analog multiline telephone (analog voice and modem data station), or a single-line telephone for dialing only (modem data-only station). These data stations connect respectively to MLX, analog, or tip/ring extension jack modules. They provide analog transmission of data.

modem pool Pair, or group of pairs, of *modems* and data modules with interconnected RS-232 interfaces that converts digital signals to analog, or analog signals to digital, thereby allowing users with *ISDN terminal adapter data stations* to communicate with users who have analog *modem data stations*.

module Circuit pack in the control unit that provides the physical jacks for connection of telephones and/or outside lines/trunks to the communications system. In the name of a module, the first digit indicates the number of *line/trunk jacks* it contains; the last digit indicates the number of *extension jacks* it contains. If no letters appear after the number, a line/trunk module provides *loop-start lines* or an extension jack module provides analog or *tip/ring* jacks. For example, a 408 GS/LS MLX module contains four line/trunk jacks and eight digital (MLX) extension jacks, and provides either *loop-start* (LS) or *ground-start* (GS)*trunks.*

monitored extension Extension for which one or more CTI applications is receiving call information. The CTI application does not have to be directly attached to the equipment at the extension in order to monitor calls. The call information may appear on the PC screen of another extension that has been programmed to receive it. See also *CTI link* and *unmonitored extension.*

Multi-Function Module See *MFM*.

multiline telephone An analog or digital (MLX) telephone that provides multiple line buttons for making or receiving calls or programming features.

multiplexing The division of a transmission channel into two or more independent channels, either by splitting the frequency band into a number of narrower bands or by dividing the channel into successive time slots.

Music On Hold Customer-provided music source or Magic on Hold connected to the system through a *loop-start* jack.

N

network Configuration of communications devices and software connected for information interchange.

network interface Hardware, software, or both that links two systems in an interconnected group of systems, for example, between the local telephone company and a PBX.

NI-1 BRI (National Integrated Services Digital Network 1 Basic Rate Interface) A type of digital facility that carries the equivalent of three lines. Two are called *B-channels* and provide voice and data communications services. A third *D-channel* controls signaling and maintains operations on the B-channels.

non-local extension In a system that is part of a *private network*, an extension that is in the *non-local dial plan*.

non-local user In a *private network*, a user who is connected to another system in the network and not to the local system.

non-local dial plan In a system that is part of a *private network*, a list of extension ranges that the local system references in order to route non-local *intersystem calls via UDP*.

non-satellite system In a *private network,* a *communications system* that is directly connected to and located more than 200 miles from the local system.

O

off-hook Telephone is said to be off-hook when the user has lifted the handset, pressed the **Speakerphone** button to turn on the speakerphone, or used a headset to connect to the communications system or the telephone network.

off-premises telephone See *OPT*.

ones density Requirement for channelized *DS1* service to the public network that eight consecutive zeros cannot occur in a digital data stream.

on-hook Telephone is said to be on-hook when the handset is hung up, the speakerphone is turned off, and the user is not using a headset to connect to the communications system or the telephone network.

OPT (off-premises telephone) *Single-line telephone* or other *tip/ring* device connected to the system via a 008 OPT module in the control unit. Appears as an inside extension to the system, but may be physically located away from the system.

OPX (off-premises extension)

out-of-band signaling Signaling that uses the same path as voice-frequency transmission and in which the signaling is outside the band used for voice frequencies.

P

parity The addition of a *bit* to a bit string so that the total number of ones is odd or even, used to detect and correct transmission errors.

PassageWay Direct Connection Solution Set of software applications that provides an interface between a personal computer and an MLX telephone.

PBX (private branch exchange) Local electronic telephone switch that serves local stations (for example, extensions within a business) and provides them with access to the public network.

PC personal computer

PCMCIA memory card (Personal Computer Memory Card International Association memory card) See *memory card*.

peripheral system In a *private network*, a system that does not connect to more than one other system, sometimes called an “end node.”

personal line Central office line/trunk that terminates directly at one or more extensions. In *Hybrid/PBX mode*, a personal line cannot be part of a line/trunk *pool*. Also called “DFT” (direct facility termination).

PFT (Power Failure Transfer) Feature that provides continuity of telephone service during a commercial power failure by switching some of the system’s line/trunk connections to telephones connected to specially designated extension jacks.

phantom extension An extension that is not actually plugged into the system but is used, for example, as a calling group member covered by a *voice messaging system*.

pool In *Hybrid/PBX mode*, a group of outside lines/trunks that users can access with a **Pool** button or by dialing an access code on an ***SA*** *button*. Also used by the *ARS* feature when choosing the least expensive route for a call.

point-to-point facility In a *private network,* a line/trunk that passes through the *PSTN* without using the switching capabilities of the PSTN.

port See *jack*. Also, refers to *extension* or *line/trunk jacks* before these are numbered according to the *dial plan* during programming. The lowest jack on a module is always Port 1.

Power Failure Transfer See *PFT*.

power supply module Device that directs electricity to modules and telephones on the system. One power supply module is needed for each carrier, and an *auxiliary power unit* is added if needed.

PRI (Primary Rate Interface) Standard interface that specifies the protocol used between two or more communications systems. As used in North America, it provides twenty-three 64-kbps *B-channels* for voice and/or data and one 16-kbps *D-channel*, which carries multiplexed signaling information for the other 23 channels.

primary system operator position First jack on the first MLX or analog multiline extension module in the control unit, that is, the extension jack with the lowest logical ID in the system.

prime line Individual extension number assigned to a telephone in a system operating in *Behind Switch mode*. Each telephone user has his or her own prime line and is automatically connected to that line when he or she lifts the handset.

private communications network or private network An interconnected group of *communications systems*, which may consist of MERLIN LEGEND Communications Systems, DEFINITY Enterprise Communications Servers (ECS), and/or DEFINITY ProLogix Solutions.

private network trunks The facilities that connect *communications systems* in a *private network*. See also *tandem tie trunks* and *tandem PRI trunks*.

processor module Module in the second slot of the control unit (Slot 0, to the right of the *power supply module*). Includes the software and memory that runs the system.

programming port reassignment Reassignment of the system programming jack position to any of the first five extension jacks on the first MLX module in the control unit.

protocol Set of conventions governing the format and timing of message exchanges between devices, such as an MLX telephone and the control unit.

PSTN Network that is commonly accessible for local or long-distance calling. Also called “public network” or “public switched network.”

PSTN trunk In a *private network*, a facility that connects a networked system to the public switched telephone network.

public switched telephone network See *PSTN.*

Q

QCC (Queued Call Console) MLX-20L telephone used by a system operator in *Hybrid/PBX mode* only. Used to answer outside calls (directed to a system operator position) and inside calls, direct inside and outside calls to an extension or an outside telephone number, serve as a message center, make outside calls for users with outward calling restrictions, set up conference calls, and monitor system operation.

R

RAM (random-access memory) Computer memory in which an individual *byte* or range of bytes can be addressed and read or changed without affecting other parts of memory.

read-only memory See *ROM*.

Remote Access System feature that allows an outside caller to gain access to the system, almost as if at a system extension. In a *private network*, remote access settings are used to control calls routed via *ARS* or *UDP* routing across the network.

restore Procedure whereby saved and archived system programming is reinstated on the system, from a floppy disk or *memory card*. See also *backup*.

restricted data channel Restricted data channels do not allow the transmission of occurrences of more than seven contiguous zero bits. See also unrestricted data channel.

ring generator Circuit pack added to the power supply that generates a high-voltage, 20–30 Hz signal to ring a telephone.

riser cable Cable that runs between floors in a multistory building and connects wiring closets.

RS-232 Physical interface, specified by the Electronics Industries Association (EIA), that transmits and receives asynchronous data at distances of up to 50 feet (15 m).

robbed-bit signaling Signaling in which the least significant *bit* of every sixth frame per channel is used for signaling in that channel.

ROM (read-only memory) Computer memory that can be read but cannot be changed.

S

SAA (Supplemental Alert Adapter) Device that permits alerting equipment to be connected to an analog multiline telephone jack so that people working in noisy or remote areas of a building can be alerted to incoming calls.

SA buttons Telephone buttons that provide access to both inside and outside calls.

satellite system In a *private network,* a *communications system* that is directly connected to and located within 200 miles of the local system.

screen pop Refers to a computer-telephony software application that takes caller information (for example, provided by Caller ID service), queries a database, and displays a screen with information about the caller onto a user's PC screen. Screen pop requires that an identifying number or code be available to identify the calling party. See also *CTI link*.

SDN (Software Defined Network) AT&T private networking service created by specialized software within the public network.

series configuration A *private network* arrangement where either two or four or more communications systems are connected in a line, with no particular system acting as the *hub system*. See also *star configuration*.

Service Observing A feature available in Release 6.1 and later systems that allows one extension to listen in on (observe) calls that arrive at another extension.

SID [station (extension) identification]

signaling Sending of information between devices to set up, maintain, or cease a connection such as a telephone call.

simplex signaling Transmission of signals in one direction only across a telecommunications channel.

single-line telephone Industry-standard touch-tone or rotary-dial telephone that handles one call at a time and is connected to the system via an *extension jack* on a 012, 016 (T/R), or 008 OPT module.

slot Position in a *carrier* for a module; numbered from 0.

SMDR (Station Message Detail Recording) Feature that captures usage information on incoming and outgoing calls.

SMDR printer Printer used to produce SMDR reports. Connected to the system via an RS-232 jack on the *processor module*.

Software Defined Network See *SDN*.

special character Pause, Stop, or End-of-Dialing signal in a programmed dialing sequence such as a speed dial number.

SPM (System Programming and Maintenance) *DOS*-, UNIX-, or Windows-based application for programming the system.

square key Configuration in *Key mode* operation in which all outside lines appear on all telephones.

star configuration A *private network* arrangement where either three or more communications systems are connected with one system acting as the *hub system*. See also *series configuration*.

station See *extension*.

station jack See *extension jack*.

Station Message Detail Recording See *SMDR*.

Supplemental Alert Adapter See *SAA*.

switch See *communications system*.

Switched 56 service DS1 Switched 56 service is an end-to-end digital, 56-kbps, full duplex, synchronous, circuit-switched service offering. The service is offered by network service providers and by some Local Exchange Carriers (LECs) as circuit-switched, 56-kbps service. T1-emulated tandem tie trunks in a private network can be programmed for data.

switchhook flash Momentary (320 ms to 1 second) on-hook signal used as a control; may be directed to the control unit or to a *host* switch outside the system. Also called “Recall” or “timed flash.”

switch identifier A number assigned to a *tandem trunk* in a *private network*. It identifies the system connected to the far end of the trunk. Switch identifiers are based on the type of system and its distance from the system where the identifier is assigned. See also *satellite system* and *non-satellite system*.

synchronous data transmission Method of transmitting a continuous digital data stream in which the transmission of each binary *bit* is synchronized with a master clock. See also *asynchronous data transmission*.

system acceptance test Test of all trunks, telephones, data terminals, and features after installation to ensure that they are working correctly.

System Access buttons See ***SA*** *buttons*.

system date and time Date and time that appear on MLX display telephones and *SMDR* reports.

system programming Programming of system functions and features that affect most users, performed from an MLX-20L telephone or a computer using *SPM*. See also *extension programming* and *centralized telephone programming.*

System Programming and Maintenance See *SPM*.

system renumbering Procedure used to change the numbers assigned to telephones, adjuncts, *calling group*s, paging groups, park zones, *Remote Access*, and lines/trunks.

T

T1 Type of digital transmission facility that in North America transmits at the *DS1* rate of 1.544 Mbps.

T1-emulated data A T1 tie trunk programmed for S56DATA for use by data calls at speeds up to 56 kbps. These trunks may be used for tandem and non-tandem operation.

T1-emulated voice A T1 tie trunk programmed for Tie-PBX or Tie-Toll for use by voice calls.

T1 Switched 56 service *T1* digital data transmission over the *public network* or over a *private network* at 56 *kbps*. See *Switched 56 service*.

tandem switching The capability of *private network* communications systems that allows them to direct outside calls from one facility to another facility, rather than just to an extension. Calls may be sent, for example, from a *PSTN* facility to a *tandem trunk* or vice versa.

tandem trunk An private outside facility (as opposed to an inside system line) that connects two communications systems in a *private network* and can carry calls to another outside facility through *tandem switching*. The trunk is not connected to the *PSTN*.

tandem tie trunk A *tandem trunk* that is an analog *delay-start tie trunk*, providing a single line/trunk per facility and allowing *analog transmission* of voice and low-speed data; or a T1 facility offering 24 channels on emulated tie trunks and programmed for voice or data.

tandem PRI trunk (tandem Primary Rate Interface trunk) A private network trunk.

TAPI Telephony Application Programming Interface. An application programming interface that allows computer telephony applications to be used. TAPI is not yet supported by the MERLIN LEGEND Communications System. See also *TSAPI and CTI.*

telephone power supply unit Equipment that provides power to an individual telephone.

terminal adapter See *ISDN terminal adapter*.

tie trunk Private trunk directly connecting two telephone switches.

timed flash See *switchhook flash*.

tip/ring Contacts and associated conductors of a *single-line telephone* plug or jack.

touch-tone receiver See *TTR*.

T/R See *tip/ring*.

trunk Telecommunications path between the communications system and the telephone company central office (*CO*) or another switch. Often used synonymously with *line*.

trunk jack See *line/trunk jack*.

trunk pool See *pool*.

TSAPI Telephony Services Application Programming Interface. An application programming interface that allows computer telephony applications to be used. TSAPI is supported by the MERLIN LEGEND Communications System Release 5.0. See also *TAPI and CTI.*

TTR (touch-tone receiver) Device used to decode *DTMF* touch-tones dialed from *single-line* or *Remote Access* telephones.

U

UDP (Uniform Dial Plan) Composed of the *local dial plan* and *non-local dial plan*. A dial plan that allows a caller at any extension in a *private network* to dial the same number of digits to reach any other extension in the private network, even if the originating extension is physically connected to one communications system and the terminating extension is physically connected to a different communications system.

unambiguous numbering The practice of numbering of extension ranges, remote access codes, or other system components to avoid routing conflicts in network or local calling. For example, Extension 441 is unique when compared to Extension 4410. However, it is ambiguous, because a system routes as soon as it matches the digits sent for a call with the digits in a local plan or in a non-local dial plan extension range. When a caller dials 4410, a system routes the call to Extension 441 immediately, without considering the last dialed digit.

Uniform Dial Plan See *UDP*.

uninterruptible power supply See *UPS*.

unit load Measure of the power load drain of a module, telephone, or *adjunct*.

unmonitored extension An extension for which no CTI application is receiving call information. See also *CTI link* and *monitored extension*.

unrestricted data channel Unrestricted data channels (also called clear data channels) allow the transmission of occurrences of more than seven contiguous zero bits. If an unrestricted data channel is requested and only restricted channels are available, the call will be rejected. See also restricted data channel.

UPS (uninterruptible power supply) Device that connects to the system to provide 117 VAC to the equipment when the commercial power source fails.

V

VAC (alternating-current voltage)

VDC (direct-current voltage)

VMI (voice messaging interface) An enhanced *tip/ring* port.

videoconferencing system System application that allows face-to-face meetings, with voice and video, to occur between individuals or groups. This application requires high-speed data transmission facilities. See also *desktop videoconferencing* and *group videoconferencing.*

virtual private network See *VPN*.

VPN (virtual private network) A type of *private network* that uses the switching capabilities of the *PSTN*, rather than *tandem switching*, to direct calls between connected communications systems. A VPN may constitute a part of a private network.

voice-band channel A transmission channel, generally in the 300–3400-Hz frequency band.

voice mail Application that allows users to send messages to other system extensions, forward messages received with comments, and reply to messages.

voice messaging interface See *VMI*.

W

WATS (Wide Area Telecommunications Service) Service that allows calls to certain areas for a flat-rate charge based on expected usage.

wink-start tie trunk *Tie trunk* on which the originating end transmits an off-hook signal and waits for the remote end to send back a signal (a wink) that it is ready for transmission.

Index

Numerics

A

B

C

D

E

F

G

H

I

K

L

M

N

O

P

Q

R

S

T

U

V

W

Z